DESIGNJET T790/T795/T1300/Z2600ps/Z5400ps/Z5600ps ePrinter series & T2300 eMFP series

Service manual

For HP Internal Use Only

© Copyright 2011, 2018 HP Development Company, L.P.

This document contains proprietary information that is protected by copyright. All rights are reserved. No part of this document may be photocopied, reproduced, or translated to another language without the prior written consent of HP.

Edition 6, October 3 2018.

Notices

Warranty

The information contained in this document is subject to change without notice.

HP makes no warranty of any kind with regard to this material, including, but not limited to, the implied warranties of merchantability and fitness for a particular purpose.

HP shall not be liable for errors contained herein or for incidental or consequential damages in connection with the furnishing, performance, or use of this material.

WARNING

The procedures described in this manual are to be performed by HP-qualified service personnel only.

Electrical Shock Hazard

Serious shock hazard leading to death or injury may result if you do not take the following precautions:

- Ensure that the ac power outlet (mains) has a protective earth (ground) terminal.
- Disconnect the product from the power source prior to performing any maintenance.
- Prevent water or any other liquids from running onto electrical components or circuits, or through openings in the enclosure.

Electrostatic Discharge

Refer to the beginning of Chapter 4 Introduction on page 262 of this manual, for precautions you should take to prevent damage to the product circuits from electrostatic discharge.

Safety Symbols

General definitions of safety symbols are given immediately after the table of contents.

WARNING

The Warning symbol calls attention to a procedure, practice, or the like, which, if not correctly performed or adhered to, could result in personal injury. Do not proceed beyond a Warning symbol until the indicated conditions are fully understood and met.

CAUTION

The Caution symbol calls attention to an operating procedure, practice, or the like, which, if not correctly performed or adhered to, could result in damage to or destruction of part or all of the product. Do not proceed beyond a Caution symbol until the indicated conditions are fully understood and met.

Content Management Department,

Barcelona Division,

HP Espanola, S.A.

Avda. Graells, 501

08190 Sant Cugat del Valles

Spain

Using this Manual

This Service Manual contains information necessary to test, calibrate, maintain and service the following:

	RTL	PostScript
HP Designjet T790 24inch	CR647A	CR648A
HP Designjet T790 44inch	CR649A	CR650A
HP DesignJet T795 44-in	CR649C	-
HP Designjet T1300 44inch	CR651A	CR652A
HP Designjet T2300 eMFP 44inch	CN727A	CN728A
HP Designjet T790 24inch Rev.B	-	CR648B
HP Designjet T790 44inch Rev.B	-	CR650B
HP Designjet T1300 44inch Rev.B	-	CR652B
HP Designjet T2300 eMFP 44inch Rev.B	-	CN728B
HP Designjet Z5400ps 44inch	-	E1L21A
HP Designjet Z5400ps 44inch Rev.B	-	E1L21B
HP Designjet Z2600ps 24inch	-	T0B52A
HP Designjet Z2600ps 24inch Rev.B	-	T0B52B
HP Designjet Z5600ps 44inch	-	T0B51A
HP Designjet Z5600ps 44inch Rev.B	-	T0B51B

When information is only applicable to a specific product, the text will indicate which product it is applicable to. There are three main areas where this might occur, and at each occurrence an icon will also be shown:

HP Designjet T2300 Printer series	HP Designjet T790/T795/T1300/Z5400ps Printer series	Web Enabled

For information about using these products, refer to the corresponding User and Quick Reference Guides.

Readership

The procedures described in this Service Manual are to be performed by HP Certified service personnel only.

Part Numbers

Part Numbers for product service parts are located in Chapter 7 Parts and Diagrams on page 229.

Table of contents

1 Troubleshooting 1

Using the Touch Control Panel (MFP only) 2

Using the Touch Control Panel 4

Service Key Combinations 6

Product Troubleshooting trees (MFP) 7

Paper-handling troubleshooting 14

Ink-supplies troubleshooting 15

Print Quality 36

The Service Image Quality Diagnostic Print 37

Reading the Diagnostic Print Results 39

Advanced Diagnostic Prints 44

Reading the Advanced diagnostic Print Results 46

Troubleshooting Print Quality Problems 52

Connectivity troubleshooting 63

2 System Error Codes 69

Introduction 69

Product logs 70

What to do if the Touch Control Panel is blank 70

Troubleshooting System Error 08:11 using the Formatter LEDs 73

Continuable and Non-Continuable Error Codes 75

System Error Code Brief Descriptions 75

System Error Codes—Full Descriptions 78

Appendix A: How to troubleshoot SE 79:04 107

Appendix B: Emergency firmware upgrade with USB flash drive 118

Appendix C: Obtaining the product log and the diagnostics package 119

Appendix D: How to check the display list memory for an HP-GL/2 job 123

3 Diagnostics Menu 125

Introduction 125

Diagnostic Tests and Utilities 127

4 Service Menu 169
Introduction 169
Service Utilities 169
Service Calibrations 206

5 Parts and Diagrams 229
Introduction 229
Product Support 230
Center Covers Front (1 of 3) 231
Center Covers Front (2 of 3) 232
Center Covers Front (3 of 3) 233
Roll Covers 235
Center Covers (Rear) 236
Right Cover 237
Left Cover 238
Right Hand Assemblies 239
Left Hand Assemblies 240
Carriage Assembly 242
Scan-Axis Assemblies 244
Paper Path Assemblies (Front) 245
Paper Path Assemblies (Rear) 246
Roll Supports 247
Scanner Parts (1 of 3) 249
Scanner Parts (2 of 3) 250
Scanner Parts (3 of 3) 251
Tools 1 252
Tools 2 253
Miscellaneous Parts 254

6 Removal and Installation 259
Introduction 262
Customer Self Repair parts 265
Service Calibration Guide to Removal and Installation 267
Belt Assembly 269
Bin Assembly 270
Bi-stable Springs 273
Bumpers, Left and Right 279
Engine Cables Kit 283
Interconnect Cables Kit 295
Carriage and Cutter Assembly 303

Cutter Assembly (Z2600/Z5600 only) 312
Carriage Bushing, Rear 314
Carriage Cover and Carriage Latch 316
Carriage Rail Oiler 321
Carriage PCA 323
Cleanout 328
Center Support 330
Converger 334
Scanner Piston Gas (MFP only) 336
Scanner Bumper (MFP only) 339
Right Collar Cover (MFP only) 342
Front Cover 349
Front Top Cover Assembly (MFP only) 350
Front Top Cover 352
Drop Detector 355
Aerosol Fan Assembly 357
EE Box 359
Encoder Disk and Encoder Sensor 364
Encoder Strip 366
Encoder Strip, spring and attachment nut 367
Formatter 370
Freewheel Assembly 372
Right Front Trim 375
Full Bleed Foam 377
Hard Disk Drive 378
Left Ink Cartridge Door 380
Right Ink Cartridge Door 382
Left Ink Supply Station 384
Ink Supply Tubes & Trailing Cable 389
Ink Supply Tubes Support Rail 398
Interconnect PCA 400
Left Collar Cover (MFP only) 402
Left Cover 403
Left Front Trim 407
Left Scanner Cover (MFP only) 409
Scanner Latch and Hook Assembly (MFP only) 411
Line Sensor 413
Media Advance Drive 419
Media Lever 426
Media Lever Position Sensor 428
Media Output Assembly 430

Out-of-paper Sensor 432
Left Panel 435
Pen to Paper Space (PPS) Solenoid 437
Pinch Arm Assembly 439
Pinchwheel Assembly 442
Print Zone Overdrive 450
Power Supply Unit 454
Real-time Clock Battery 456
Rear Cover (MFP only) 457
Rear Cover 460
Rear Deflectors 461
Right Cover 463
Right Scanner Cover (MFP only) 467
Roll Cover Bumpers, Lower 470
Roll Cover, Lower 473
Roll Cover, Upper 477
Left Roll Guide 479
Right Roll Guide 480
Roll Support, Lower Left 481
Roll Support, Lower Right 483
Roll Support Sensor, Lower Left 485
Roll Support Sensor, Upper Left 486
Roll Support, Upper Left 487
Roll Support, Upper Right 489
Scan-axis Motor 491
Service Station 495
Single-sheet Sensor 500
Spindle 502
Spittoon, Left 503
Starwheel Assembly 504
Starwheel Lifter, Left 506
Starwheel Lifter, Right 508
Starwheel Motor 511
Wall Spacers 513
Scanner Position Sensor (MFP only) 516
Torsion Damper (MFP only) 521
CIS Element (MFP only) 524
Scanner Exit Media Sensors (MFP only) 525
Scanner Entry Media Sensors (MFP only) 526
Pressure Rollers (MFP only) 527
Scanner Controller Board (MFP only) 528

Scanner Motor Assembly (MFP only) 530
Taco Sensor (MFP only) 531
Touch Control Panel 533
Window 536
Window Position Sensor 540

7 Preventive Maintenance 543
Preventive Maintenance 543
Preventive Maintenance Kits 551

Appendix A CSR Installation Flyers 555
Cutter assembly 556
Freewheel assembly 558
Freewheel assembly (screwdriver) 560
Left side panel (T1200) 562
Pinch arm assembly 564
Pinch arm assembly (screwdriver) 566
Roll cover upper bumpers 568
Roll cover upper bumpers (screwdriver) 570
Foot Extension 572
Front Deflector 573
Rear Deflector Mylar 575
Glass Plate 577
Latch Handle Cover 579

1 Troubleshooting

- Using the Touch Control Panel (MFP only)
- Using the Touch Control Panel
- Service Key Combinations
- Product Troubleshooting trees (MFP)
- Paper-handling troubleshooting
- Ink-supplies troubleshooting
- Print Quality
- The Service Image Quality Diagnostic Print
- Reading the Diagnostic Print Results
- Advanced Diagnostic Prints
- Reading the Advanced diagnostic Print Results
- Troubleshooting Print Quality Problems
- Connectivity troubleshooting

Using the Touch Control Panel (MFP only)

The external frame of the Touch Control Panel contains the following elements:

- The **Home** LED (top-left) is used to return to the Home Screen. When clicked only once, this same Home Screen is displayed. When pressed for more than 4 seconds, the Accessibility Home Screen is displayed.
- The **Cancel** LED (bottom right) is used to cancel any action, when it is active.
- The **Back** LED (bottom left) is to go back to the previous screen, when it is active.
- The **Arrow** LEDs (in the middle of each side) enables the user to navigate in both directions.
- The **Eject** LED (top-right) enables the user to stop the USB connection.

The internal part of the Touch Control Panel is the Home Screen and this is divided into three main areas:

- The **upper area** is for the Product Information (left icon) and for displaying high priority alerts (in text) you can press the most critical alert in the home screen and the others (less critical) will be shown.

  The main menu of the product is accessed by clicking on the Product Information icon and then selecting the last tab (at the right side)
- The **middle area** is used to place the three icons for the main work flows of the product, which are: Print, Scan and Copy.
- The **lower area** of the Home Screen is reserved for the contents area. The contents area will contain all the functionality related with printing content, for example in the Job Queue.

When a USB drive is inserted, a USB icon will also be displayed to the left of this area, and when a Postscript/PDF job is being printed an Adobe logo will display in the bottom right area

Using the Touch Control Panel

The Touch Control Panel is located on the front right of the printer. It gives you complete control of your printer: from here you can print, view information about the printer, change printer settings, perform calibrations and tests, and so on. The Touch Control Panel also displays alerts (warning and error messages) when needed.

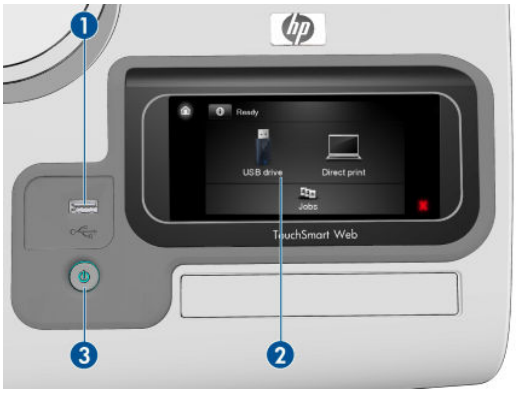

1. A Hi-Speed USB host port, intended for connecting a USB flash drive, which can provide files to be printed. When a USB flash drive is inserted, a USB icon is displayed on the Touch Control Panel's home screen.
2. The Touch Control Panel itself: a touch-sensitive screen with a graphical user interface.
3. The Power key, with which you can turn the printer on or off. The key is illuminated when the printer is on. It flashes when the printer is in transition between on and off.

The Touch Control Panel has a large central area to display dynamic information and icons. On the left and right sides you can see up to six fixed icons at different times. Normally they are not all displayed at the same time.

Left and right fixed icons

- Press to return to the home screen.
- Press to view help about the current screen.
- Press to go to the previous item.
- Press to go to the next item.

- Press to go back to the previous screen. This does not discard any changes made in the current screen.
- Press to cancel the current process.

Home screen dynamic icons

The following items are displayed only on the home screen.

- Press to view information about printer status, change printer settings, or initiate actions such as loading paper or replacing ink supplies. A smaller warning icon appears if there are actions that need to be performed.
- To the right of the above button is a message showing the printer status or the most important current alert. Press this message to see a list of all current alerts, with an icon indicating the severity of each alert.
- Press to print a file from a USB flash drive, or to print from a computer.
- Press to view information about the USB flash drive(s). This icon appears only when one or more USB flash drives are inserted.
- Press to view and manage the job queue. A smaller warning icon appears if there are jobs on hold.
- While a PostScript or PDF job is printing (PostScript printers only), the Adobe PDF icon is displayed; pressing it has no effect.

If the printer is left idle for some time, it goes into sleep mode and switches off the front-panel display. To change the time that elapses before sleep mode, press , then , then **Setup** > **Front panel options** > **Sleep mode wait time**. You can set a time between 1 and 240 minutes.

The printer wakes from sleep mode and switches on the front-panel display whenever there is some external interaction with it.

Information about specific uses of the Touch Control Panel can be found throughout this guide.

Service Key Combinations

Table 1-1 Service Key Combinations

Label	Description
Diagnostic mode	1. With the product turned off, press the **Power Key** 2. When the magic frame LEDs become active, select by touching one of the following sequences: – CANCEL + HOME + EJECT: hp-service-1: For The Onsite Engineer – CANCEL + BACK + EJECT: hp-service-2: For call center remote support The LEDs in the frame will blink a response to confirm the selected sequence.
Service menu (Service Engineers only)	With the product is powered on, access main menu – service menu. Password is **3174** For tools that require another password, this is **5494**
Service menu (for users)	With the product powered on, access main menu – service menu. Password is **3174**. There is an icon in front of the option, indicating that the tool is protected (which requires a service password).

Product Troubleshooting trees (MFP)

Us the following troubleshooting trees to troubleshoot issues with the MFP in the first instance.

Product Troubleshooting Tree

Figure 1-1 Troubleshooting

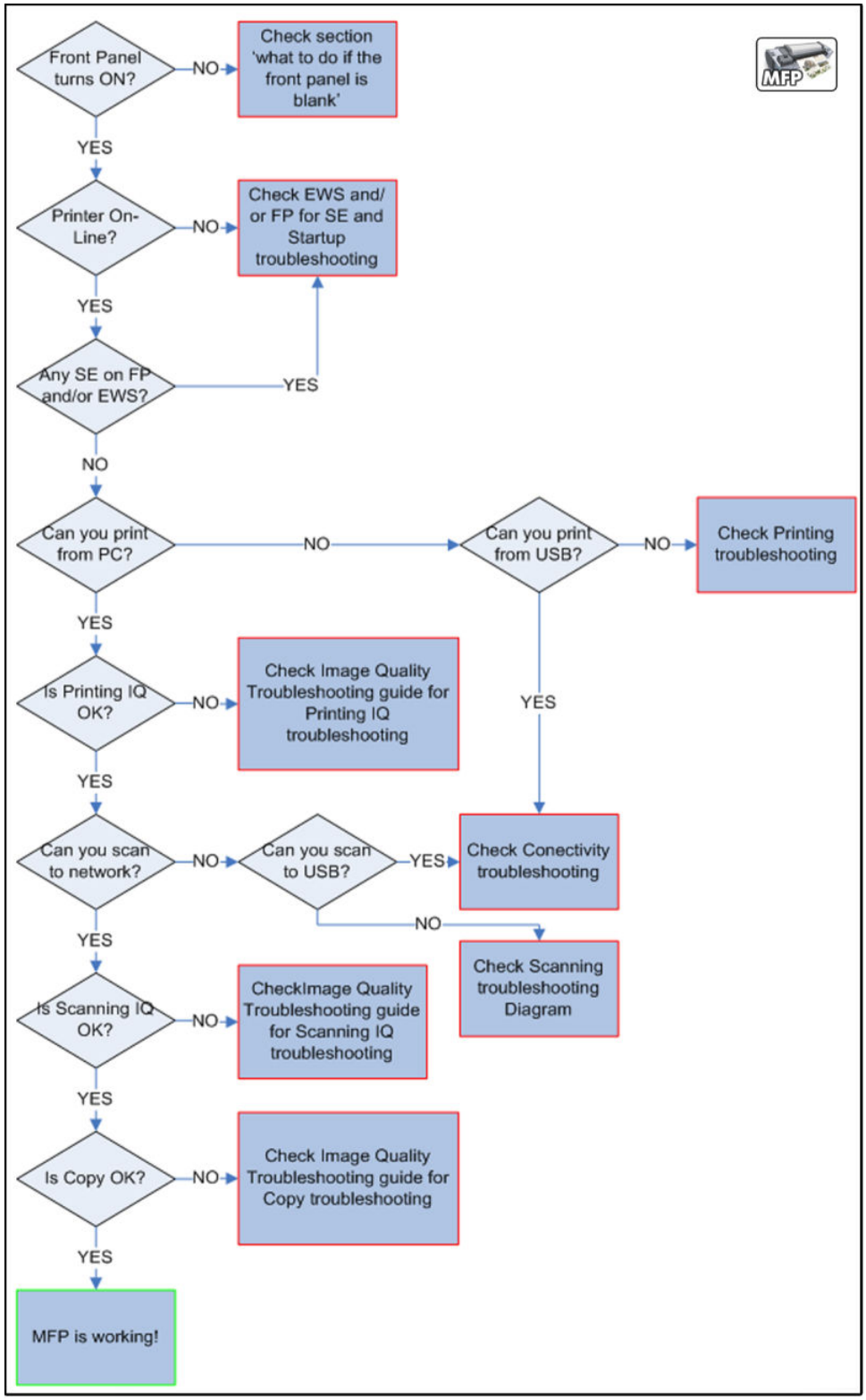

Scanner Troubleshooting Tree

Use this tree to troubleshoot the scanner in the MFP.

Figure 1-2 Scanner Troubleshooting

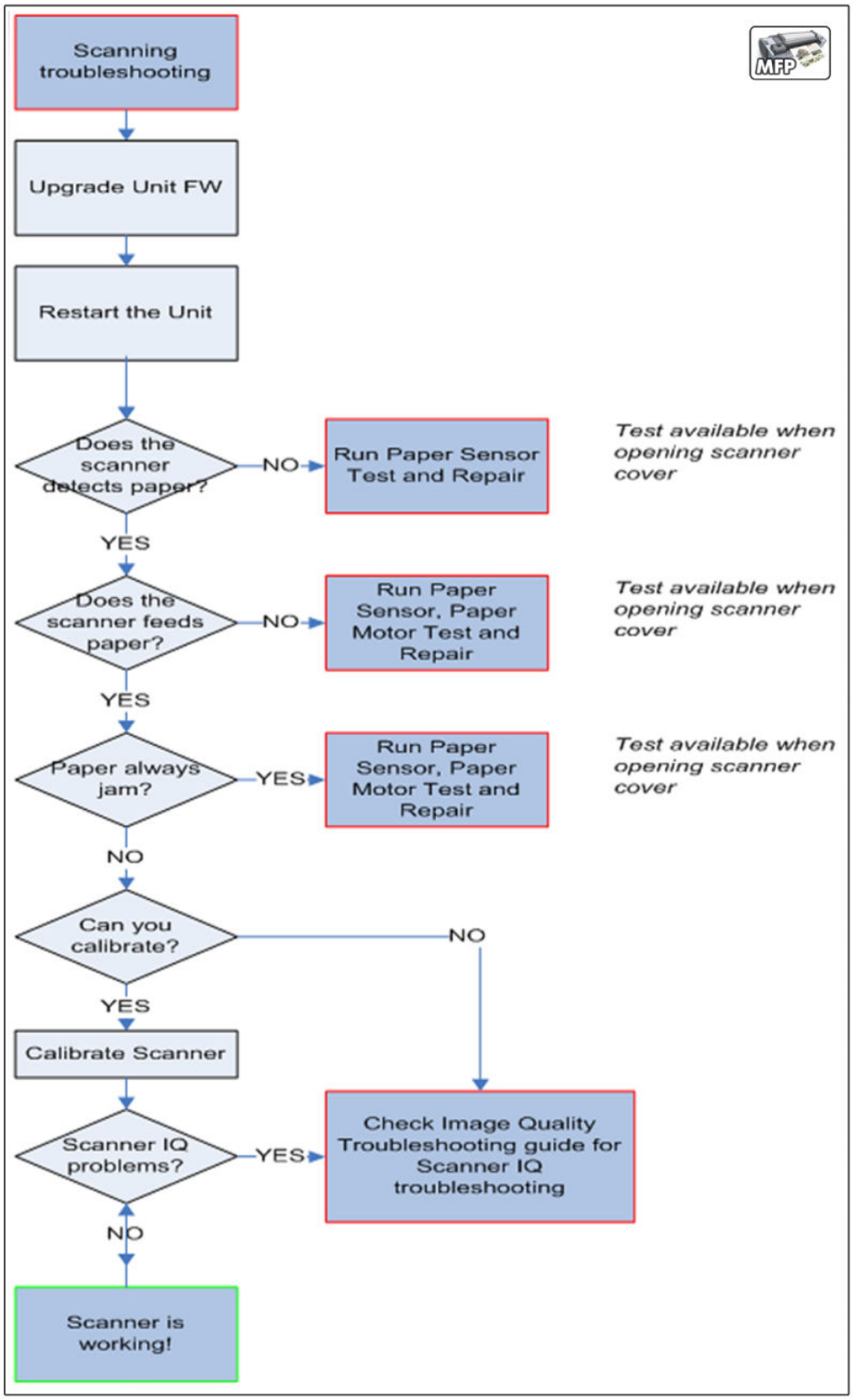

Scanner CIS Troubleshooting

Use this tree to troubleshoot the CIS of the scanner in the MFP.

Figure 1-3 Scanner Troubleshooting

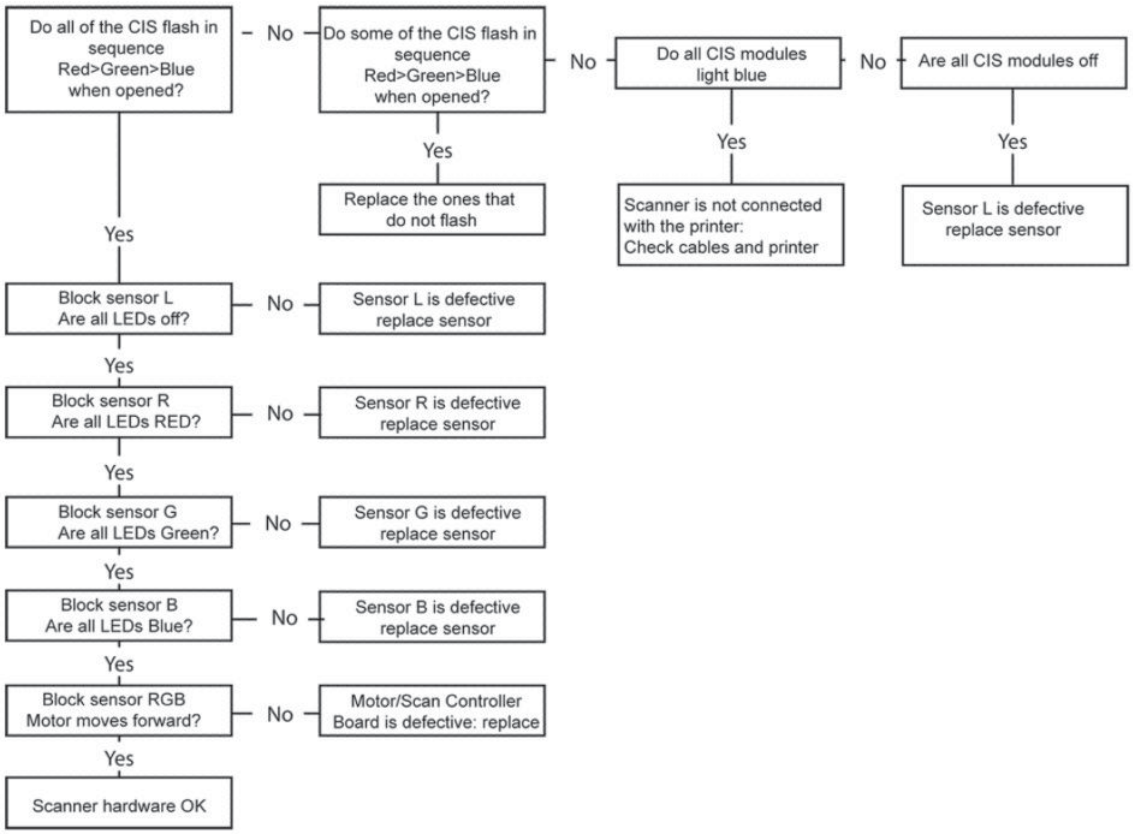

Troubleshooting system error codes

System Error Codes on page 69 contains a list of system error codes and their respective descriptions and recommended corrective actions. Try only one recommended action at a time and check whether the error code has disappeared.

If you have an error code which is not documented in this Service Manual or you have an error which you cannot resolve, then report the error to the HP Response Center or the nearest HP Support Office. When reporting the error, have the information ready, refer to Reporting a system error to HP support on page 69:

Performing a service test on a failed assembly

If possible, always perform a Service Test on the component/assembly that you are about to replace, just to make sure that is the component/assembly that has failed.

Shown below is a list of the Service tests and the component(s) tested:

- Scan Axis Test
  - Star Wheel Lifter
  - PRS
  - Scan Axis Servosystem
  - Cutter
- Paper Drive Test
  - Components of the Paper Axis Subsystem
- Electronics Module Test
  - Formatter
- Carriage assembly test
  - Carriage Assembly
- Sensors Test
  - Scanner Position Sensor (MFP only)
  - Media Lever Position sensor
  - Media sensor
  - Upper or lower roll cover sensor
  - Single-sheet sensor
- Rewinder test
  - Right Roll Support.
- Ink Delivery System Test
  - Ink Supply Station
  - Ink supplies
- Service Station test
  - Service Station.
  - Primer Motor

NOTE: If the test on that component/assembly passes, you should **not** replace it.

For information on the Service Tests and how to use them see Diagnostics Menu on page 125.

Performing the necessary service calibrations

Is the product calibrated correctly after replacing a component? For information on the Service Calibrations and how to use them see Service Menu on page 169.

NOTE: Remember that certain Calibrations are required even if an Assembly has been disassembled to gain access to another Assembly or Component.

Solving scan/print-quality problems

Refer to the Image Quality Troubleshooting Guide (in the EWS-Support Tab or in the CD).

The Touch Control Panel is blank

See What to do if the Touch Control Panel is blank on page 70.

The product does not power on

See What to do if the Touch Control Panel is blank on page 70.

The product continuously rejects printheads

▲ Clean the flex contacts on the Printhead and in the Carriage Assembly using the Carriage Interconnect Wiper and try again.

Cover sensors are not working

1. Perform the Sensors Test. See Sensors Test on page 144.
2. Check that the cable for the faulty sensor is not damaged and is connected correctly.
3. Replace the faulty Sensor.

The line sensor has problems detecting paper

1. Check the type of paper that is being used since the Line sensor may have problems detecting transparent paper or some types of Non-HP paper. Try loading white HP paper in to the product and check that the Line sensor detects it.
2. The Line Sensor is not calibrated correctly. Perform the Line Sensor Calibration. See Line Sensor Calibration on page 218.
3. The Line Sensor is damaged or faulty. Replace the Line Sensor. See Line Sensor on page 413.

Troubleshooting Printer paper jams and printhead crashes

The failure modes "paper jam" and "head crash" are grouped together because in many cases a paper jam causes the paper to lift up into the Carriage path and cause a Printhead crash, thus causing many paper jam failures to be reported as head crashes.

1. Did the paper jam occur when loading paper?
   - If the client has had paper jams, it is common for pieces of paper to get stuck in the paper path. Clear the paper path.

NOTE: When clearing a paper jam, sometimes paper is stuck in the paper path. To clear this, you must lift the Media Lever and insert thicker paper into the paper path to push out the paper that is still stuck there.

2. Is the customer using non-HP paper?

   - The use of non-HP paper can easily be the cause of paper jams and head crashes (especially head crashes because HP paper is specially formulated to avoid cockle, one of the primary causes of head crashes). If the paper is not HP approved, advise the customer to use HP paper and check to see whether the problem is now solved.

Troubleshooting Scanner paper jams (MFP only)

1. If while feeding paper into the Scanner a jam occurs, use the eject button on the Touch Control Panel to clear the jam.
2. Unlatch the CIS Cover.

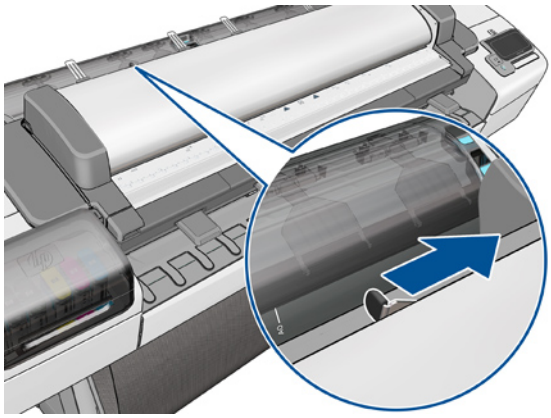

3. Open the CIS and clear the area of any paper.

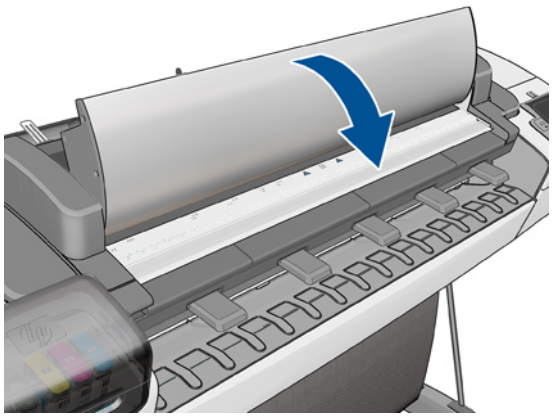

The basket was damaged during the product setup

1. There are three plastic parts that could break during product installation and need replacing.
2. Check the parts table and graphics in Parts and Diagrams to identify what service parts you must order. See Product Support on page 230.
3. Replace the component. See Bin Assembly on page 270.

Paper-handling troubleshooting

Roll paper

The Touch Control Panel of the product indicates that paper is misaligned or incorrectly positioned

- The roll may be loaded the wrong way. The paper should load over the roll toward you.
- Check that the paper is correctly loaded onto the spindle.
- The paper may be loaded at an angle. The right-hand edge must be aligned with the blue line on the Print Platen.
- Check that the Right Roll Support is properly attached and screwed to the product.
- The Rewinder, located on the Right Roll Support, should maintain proper back tension. If the Right Roll Support is misaligned or not properly attached to the product, the Rewinder will not function properly.
- To further diagnose problems with the Rewinder, see Rewinder Test on page 147.
- If the customer is experiencing problems with paper jams, check that the Overdrive is not obstructed by paper or that the Turn Drive Roller Service Utility is being used. See Turn Drive Roller on page 172
- While attempting to load roll media, if the Touch Control Panel prompts you to remove paper, although no paper is loaded, calibrate the sheet sensor, refer to Calibrate Sheet Sensor on page 223

Sheet paper

- The sheet must be loaded with the right-hand edge against the white line on the upper roll cover.
- The paper may be crumpled or warped or may have irregular edges.
- If the printer incorrectly detects the presence of a sheet of paper, perform the Calibrate Sheet Sensor, refer to Calibrate Sheet Sensor on page 223.
- If hand-cut paper is used, the edges may not form a right-angle or they may be rough. If possible, hand-cut paper should not be used. Only purchased sheet paper should be used in the product.
- If you have problems with paper jams, check that the Overdrive is not obstructed by bits of paper or using the Turn Drive Roller Service Utility. See Turn Drive Roller on page 172.
- When attempting to load sheet paper from Front Panel, if the printer displays a media skew message repeatedly, and sheet cannot be loaded, calibrate sheet sensor. refer to Calibrate Sheet Sensor on page 223

Ink-supplies troubleshooting

- Introduction to ink supplies
- Ink cartridge levels, information and replacement
- Printhead information, replacement and alignment
- Ink cartridge and printhead status messages
- Solving ink-supply problems
- Maintaining and cleaning the printheads

Introduction to ink supplies

Introduction to ink supplies

What are ink supplies?

For each of the ink colors used in the product, there are two components, the Printhead and Ink Cartridge. These components are called Ink Supplies.

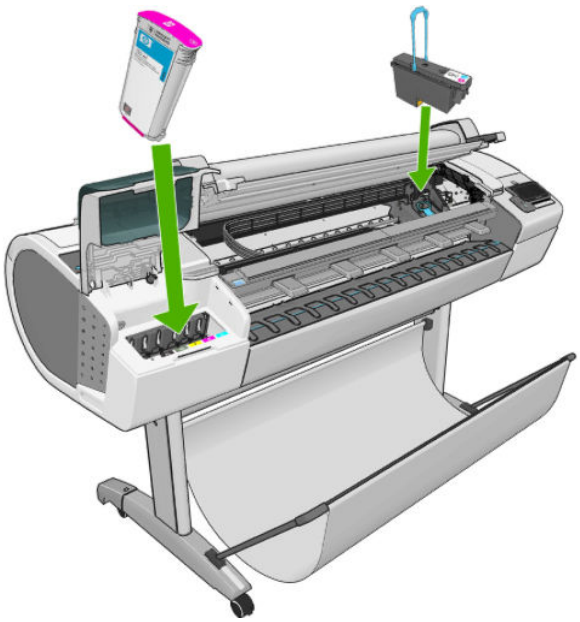

Ink cartridges

The product's six Ink Cartridges provide matte black, magenta, yellow, cyan, gray (or red, depending on the printer model) and photo black ink to the Printheads. The color Ink Cartridges supplied with the product have a capacity of 69ml but optional 130 ml or 300 ml are also available.

The Ink Cartridges for the T product series require no maintenance or cleaning. As long as each Ink Cartridge is inserted correctly into its slot, the ink will flow to the Printheads. Because the Printheads control the amount of ink transferred to the page, you will continue to see high-quality printing results even when the ink levels are getting low.

The Touch Control Panel displays the status of the Ink Cartridge. Using the Touch Control Panel, detailed information can be checked on the Ink Cartridges.

Table 1-2 Available Ink Cartridges

Ink cartridge	Product Model	Part number
HP 72 69 ml Photo Black Ink Cartridge	T series models	C9397A
HP 72 69 ml Cyan Ink Cartridge	T series models	C9398A
HP 72 69 ml Magenta Ink Cartridge	T series models	C9399A
HP 72 69 ml Yellow Ink Cartridge	T series models	C9400A
HP 72 69 ml Gray Ink Cartridge	T series models	C9401A
HP 72 130 ml Matte Black Ink Cartridge	T series models	C9403A
HP 72 130 ml Photo Black Ink Cartridge	T series models	C9370A
HP 72 130 ml Cyan Ink Cartridge	T series models	C9371A
HP 72 130 ml Magenta Ink Cartridge	T series models	C9372A
HP 72 130 ml Yellow Ink Cartridge	T series models	C9373A
HP 72 130 ml Gray Ink Cartridge	T series models	C9374A
HP 726 300 ml Matte Black Ink Cartridge	T1300 series only	CH575A
HP 70 Matte Black 130 ml Ink Cartridge	Z5400 series models	C9448A
HP 70 Photo Black 130 ml Ink Cartridge	Z5400 series models	C9449A
HP 70 Light Gray 130 ml Ink Cartridge	Z5400 series models	C9451A
HP 70 Cyan 130 ml Ink Cartridge	Z5400 series models	C9452A
HP 70 Magenta 130 ml Ink Cartridge	Z5400 series models	C9453A
HP 70 Yellow 130 ml Ink Cartridge	Z5400 series models	C9454A
HP 70 Matte Black 130 ml Ink Cartridge Twin Pack	Z5400 series models	CB339A
HP 70 Photo Black 130 ml Ink Cartridge Twin Pack	Z5400 series models	CB340A

Table 1-2 Available Ink Cartridges (continued)

Ink cartridge	Product Model	Part number
HP 70 Light Gray 130 ml Ink Cartridge Twin Pack	Z5400 series models	CB342A
HP 70 Cyan 130 ml Ink Cartridge Twin Pack	Z5400 series models	CB343A
HP 70 Magenta 130 ml Ink Cartridge Twin Pack	Z5400 series models	CB344A
HP 70 Yellow 130 ml Ink Cartridge Twin Pack	Z5400 series models	CB345A
HP 772 300 ml Magenta Designjet Ink Cartridge	Z5400 series models	CN629A
HP 772 300 ml Yellow Designjet Ink Cartridge	Z5400 series models	CN630A
HP 772 300 ml Photo Black Designjet Ink Cartridge	Z5400 series models	CN633A
HP 772 300 ml Light Gray Designjet Ink Cartridge	Z5400 series models	CN634A
HP 772 300 ml Matte Black Designjet Ink Cartridge	Z5400 series models	CN635A
HP 772 300 ml Cyan Designjet Ink Cartridge	Z5400 series models	CN636A
HP 745 130-ml Magenta DesignJet Ink Cartridge	Z2600/Z5600 series only	F9J95A
HP 745 130-ml Yellow DesignJet Ink Cartridge	Z2600/Z5600 series only	F9J96A
HP 745 130-ml Cyan DesignJet Ink Cartridge	Z2600/Z5600 series only	F9J97A
HP 745 130-ml Photo Black DesignJet Ink Cartridge	Z2600/Z5600 series only	F9J98A
HP 745 130-ml Photo Black DesignJet Ink Cartridge	Z2600/Z5600 series only	F9J99A
HP 745 130-ml Chromatic Red DesignJet Ink Cartridge	Z2600/Z5600 series only	F9K00A
HP 745 300-ml Magenta DesignJet Ink Cartridge	Z2600/Z5600 series only	F9K01A
HP 745 300-ml Yellow DesignJet Ink Cartridge	Z2600/Z5600 series only	F9K02A
HP 745 300-ml Cyan DesignJet Ink Cartridge	Z2600/Z5600 series only	F9K03A
HP 745 300-ml Photo Black DesignJet Ink Cartridge	Z2600/Z5600 series only	F9K04A
HP 745 300-ml Matte Black DesignJet Ink Cartridge	Z2600/Z5600 series only	F9K05A
HP 745 300-ml Chromatic Red DesignJet Ink Cartridge	Z2600/Z5600 series only	F9K06A

Printheads

The Printheads are extremely durable and do not need to be replaced every time an Ink Cartridge is replaced. They are independent of the Ink Cartridges and will continue giving excellent image-quality results even if the Ink Cartridges are low on ink.

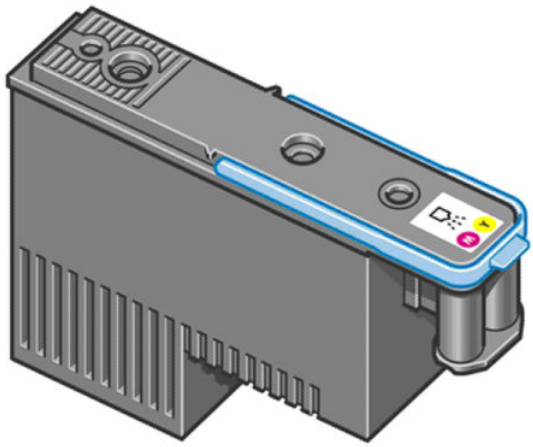

Table 1-3 Available Printheads

	Product Model	Part number
HP 72 Gray & Photo Black Printhead	T series models	C9380A
HP 72 Magenta & Cyan Printhead		C9383A
HP 72 Matte Black & Yellow Printhead		C9384A
HP 70 Matte Black and Cyan Printhead	Z5400 series models	C9404A
HP 70 Magenta and Yellow Printhead		C9406A
HP 70 Photo Black and Light Gray Printhead		C9407A
HP 744 Photo Black and Cyan DesignJet Printhead	Z2600/Z5600 series models	F9J86A
HP 744 Magenta and Yellow DesignJet Printhead		F9J87A
HP 744 Matte Black and Chromatic Red DesignJet Printhead		F9J88A

General information about the ink supplies

For optimum results from the product and modular ink delivery system always follow these guidelines when handling the ink supplies:

- Always install the Ink Cartridges and Printheads before the expiration date, which is on the packaging.
- Install Ink Cartridges and Printheads in their color-coded slots.
- Follow the instructions on the Touch Control Panel of the product during installation.
- Avoid unnecessary removal of the Ink Cartridges and Printheads.
- When turning off the product always use the Power button on the Touch Control Panel. The Printheads are then stored correctly which prevents them from drying out.
- The Ink Cartridges should never be removed while the product is printing. They should only be removed when the product is ready for you to replace them. The Touch Control Panel will guide you through the removal and installation procedure.

General precautions when handling ink supplies

Use the following precautions when handling Ink Supplies:

NOTE: Do not touch, wipe or attempt to clean the printhead nozzles. This can damage the printhead.

- Handle the ink supplies with care. In particular the Printhead, which is a high precision device and must be handled carefully.
- Do not touch the Printhead nozzles.
- Do not put the Printhead down on the nozzles.
- Do not be rough when handling the Printheads. Always set them down gently
- Do not drop the Printheads.
- Proper handling will assure optimum performance throughout the Printhead life.
- Do not touch the end of the Ink Cartridge which is inserted into the product as there may be a small amount of ink on the connection.
- Avoid storing partially used Ink Cartridges on their ends.

When should you replace the ink supplies?

When to change the ink supplies is mostly determined by you with guidance from the Touch Control Panel. In conjunction with the messages displayed in the Touch Control Panel and the message explanations in this chapter, you will be able to choose for yourself when is the right time to change the ink supplies.

The product will also display the ink level and will tell you when the ink supply is low on ink. This means you have constantly updated information about the ink supplies.

Ink cartridge levels, information and replacement

Ink cartridge levels and information

The Touch Control Panel displays Ink Levels shown as level bars. These bars represent how much ink is remaining in the Ink Cartridges: as ink is used up the bars get shorter in length. To view the ink levels perform the following steps:

1. Press on the Information icon .
2. Press on the Ink Menu icon. Each of the Ink Cartridges is displayed as a bar indicating the level of ink remaining.

3. To get further information of an Ink Cartridge, press on the corresponding bar that you want to view.

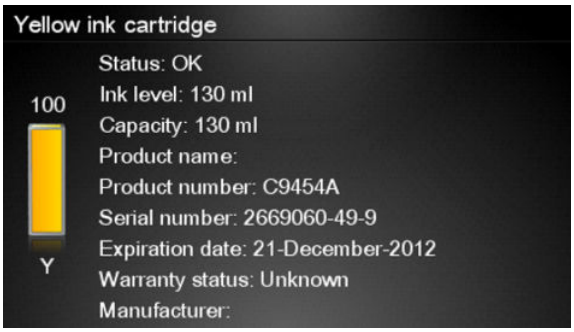

The information supplied is:

- The current status of the Ink Cartridge.
- The current ink level of the ink cartridge in milliliters.
- Original capacity of the ink cartridge in milliliters.
- The make of the Ink Cartridge (HP no.72 is recommended).
- The product name of the Ink Cartridge.
- The product number of the Ink Cartridge.
- The serial number of the Ink Cartridge.
- The Expiration Date of the ink cartridge.
- The current warranty status of the Ink Cartridge.
- The manufacturer of the Ink Cartridge (HP is recommended).

The product consumes more gray ink than M, C, or Y

This is not a problem, and no action should be taken to “correct” this attribute of the product.

In general the higher frequency of change is because Matte Black ink is the one that is used for lines and black objects in technical papers (bond, coated, HW coated, natural tracing paper, etc.), which are the types of contents that are more commonly printed with this type of product.

About gray ink

The T Series products are the first HP Designjet technical products to include Gray ink. One thing that users may notice is that Gray ink is used in higher quantities than Cyan, Magenta and Yellow inks. This happens because of the following reasons:

1. Gray areas (which are very typical in technical drawings) can now be printed by using only Gray ink. In the past, these areas had to be printed by combining Cyan, Magenta and Yellow inks. This means that Gray ink is used more frequently than the rest of the inks (C, M, Y) which are now used less frequently, so the difference in consumption is noticeable. However overall the T Series products will actually need to use in total less ink to print gray areas than previous Designjet products.
2. Soft colors can now be printed by combining C, M and Y inks with Gray. The addition of Gray ink softens the color, improving transition areas. It also allows printing soft colors by using less C, M and Y. These two types of contents are very typical and make the consumption of Gray to increase and the consumption of C, M and Y to decrease.

Conclusion

However, no matter the combination of inks that are used, when the total cc's of ink are added up, the T Series products will always have a lower ink consumption than the HP Designjet 500, 800 and 1000 series for equivalent contents with equivalent levels of print quality.

Changing an Ink Cartridge

There are two occasions when you need to remove an ink cartridge:

- The ink cartridge is very low and you want to replace it with a full cartridge for unattended printing (you can use up the remaining ink in the first cartridge at a more convenient time).
- The ink cartridge is empty or faulty, and you must replace it to continue printing.

NOTE: Do not try to remove an ink cartridge while printing. Remove an ink cartridge only if you are ready to insert another one.

Make sure the product wheels are locked (the brake lever is pressed down) to prevent the product from moving.

To change an ink cartridge there are two methods, the first is shown below by using the ink tab, the second method is to access the main menu option (refer to the User's Guide for further details).

1. Press on the Information icon.

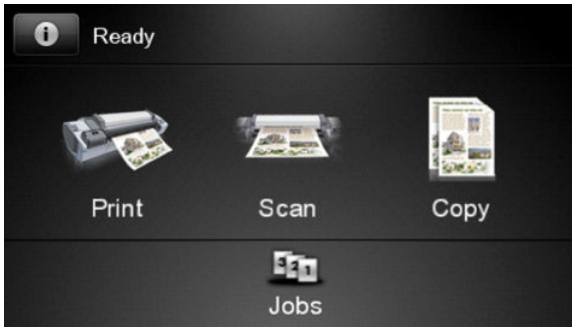

2. Press on the Ink Menu icon and the following screen is displayed.

Press on the **Replace ink cartridge** tab

3. The following screen is displayed, press OK to continue.

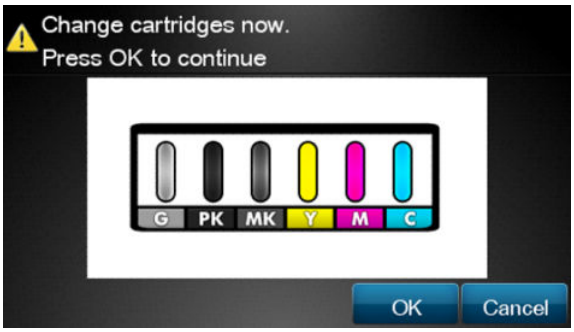

4. Open the relevant Ink Cartridge cover for the Ink Cartridge you want to replace.
5. Pull the required Ink Cartridge straight up to remove it from the product. The Touch Control Panel indicates the missing Ink Cartridge.
6. Before removing the cartridge from its wrapping, shake it vigorously.
7. Unwrap the new ink cartridge, find the label identifying the ink color. Check that the letter or letters marking the empty slot, matches the letter or letters on the cartridge label.
8. Insert the ink cartridge into its slot.
9. Push the cartridge into the slot until it snaps into position. You will hear a beep and see confirmation that the cartridge has been inserted.
10. When all cartridges have been inserted, close the cover.

Printhead information, replacement and alignment

Obtaining Printhead Information

1. Press on the Information icon.

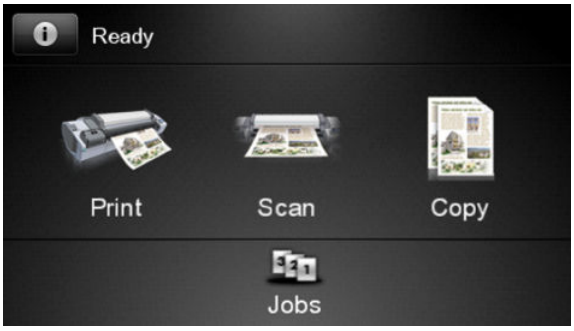

2. Press on the Printhead Menu icon and the following screen is displayed, press on the printhead that you want information on.

3. The Touch Control Panel displays information on the selected Printhead.

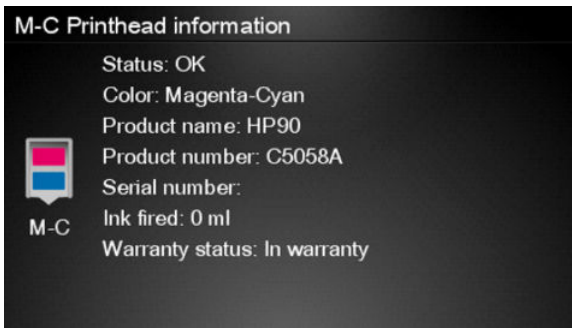

The information supplied is:

- The current status of the printhead.
- The color of the printhead.
- The make of the printhead (HP no.72 is recommended).
- The product number of the Printhead.
- The serial number of the Printhead.
- How much ink has been fired (consumed) by the printhead.

NOTE: It is possible for a printhead to consume more than one Ink Cartridge.

- The current warranty status of the Printhead.

Changing a Printhead

To change a Printhead there are two methods, the first is shown below by using the printhead tab, the second method is to access the main menu option (refer to the User's Guide for further details).

1. Press on the Information icon.

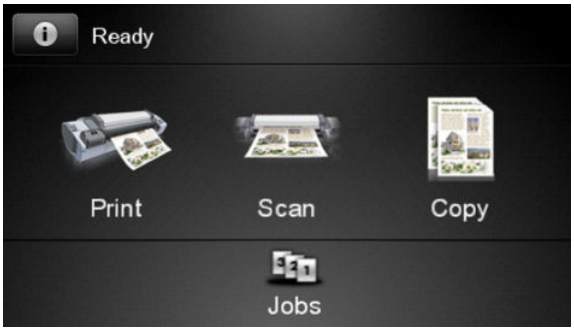

2. Press on the Printhead Menu icon and the following screen is displayed. Press on the **Replace Printhead** tab.

3. A screen is displayed, showing an animation of how to install the printhead(s).
4. The product moves the Carriage to the correct position to replace Printheads.

NOTE: If the carriage is left in the removal position for more than three minutes without inserting or removing any printheads, it will try to move back to its normal position at the right-hand end.

5. Open the Scanner (MFP only) or Window.

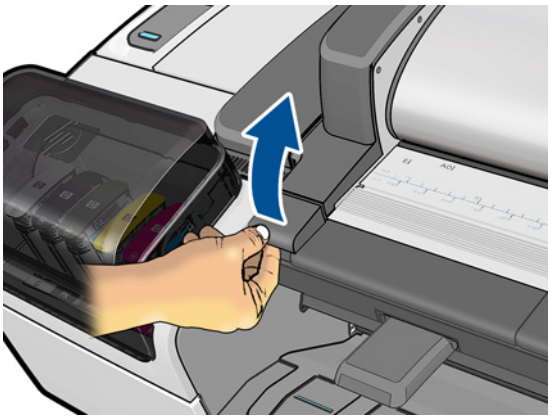

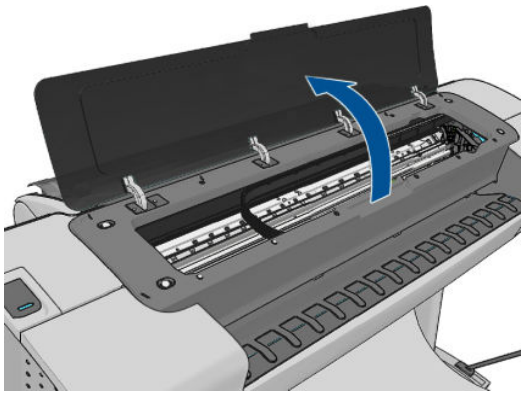

6. Locate the carriage on the right side of the product.

7. Pull the blue handle up and toward you to release the Carriage Cover.

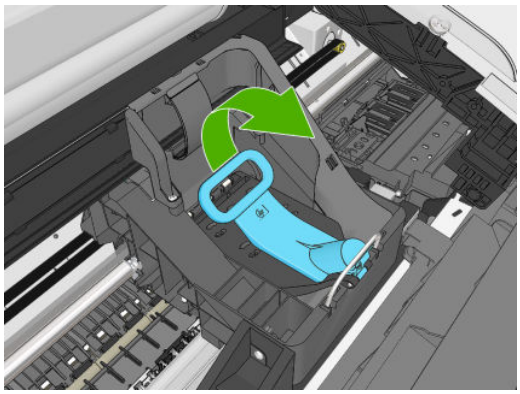

8. Push the handle back.

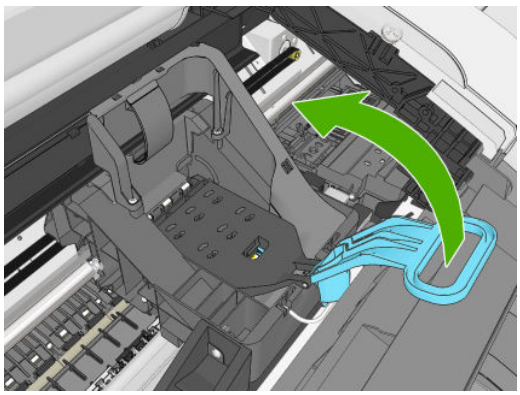

9. This gives you access to the printheads.

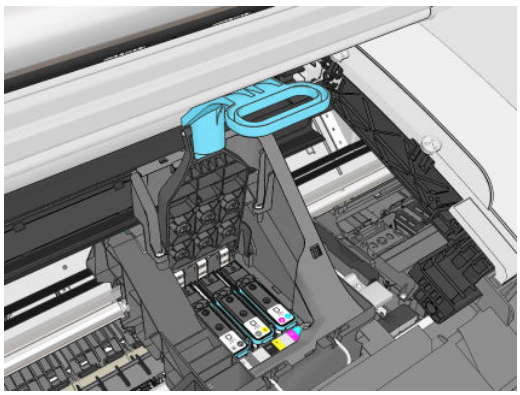

10. The following screen is displayed

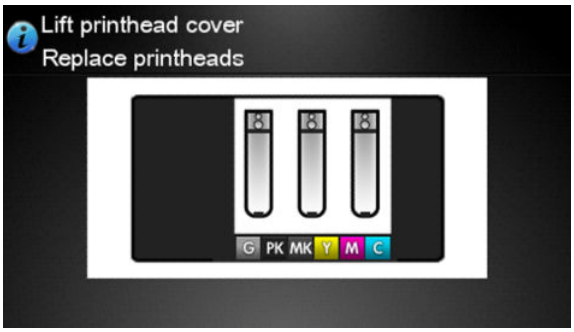

11. Remove a printhead by lifting up the blue handle.

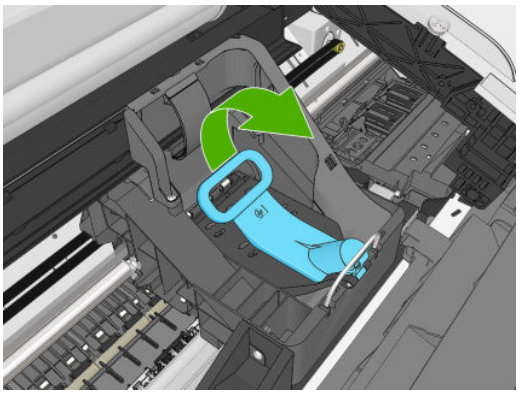

12. Using the blue handle, use steady force to disengage the printhead.

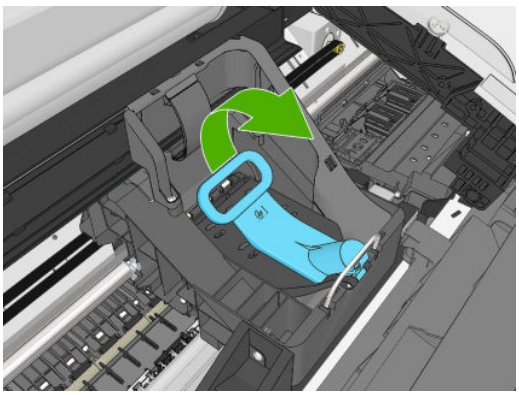

13. Pull the blue handle upward until the printhead is released from the carriage.

⚠ CAUTION: Do not pull abruptly because this can damage the printhead.

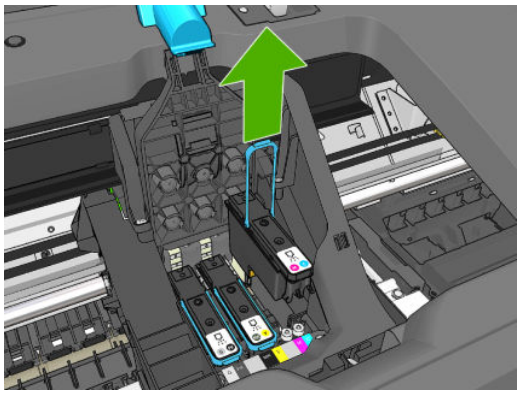

14. The Touch Control Panel display identifies the missing printhead.
15. To insert a new printhead first remove the orange protective caps.

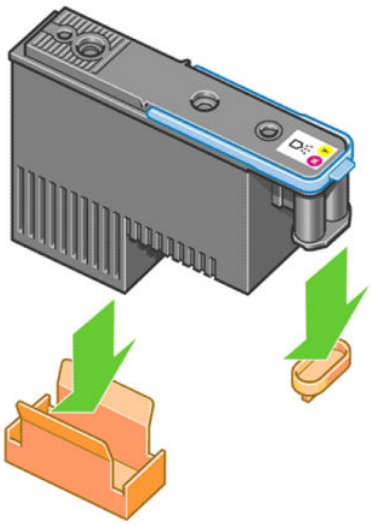

16. Insert the new printhead into its correct slot in the carriage.

⚠ CAUTION: Insert the printhead slowly and vertically, straight down. It may be damaged if you insert it too fast, or at an angle, or if you rotate it as you insert it.

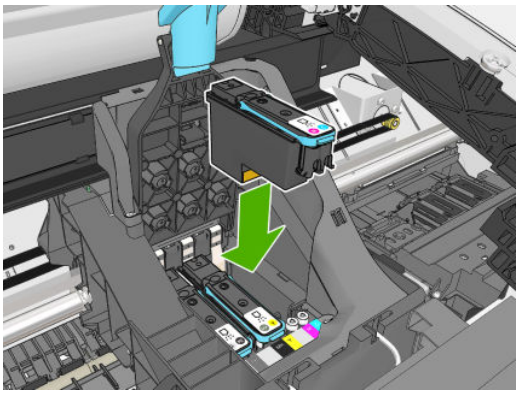

17. Push down as indicated by the arrow shown below.

⚠ CAUTION: When installing the new printhead there may be some resistance, so you need to press it down firmly but smoothly. You should hear a beep and see confirmation on the Touch Control Panel display that the printhead has been inserted.

18. Insert all other printheads that need to be installed, and close the carriage lid.

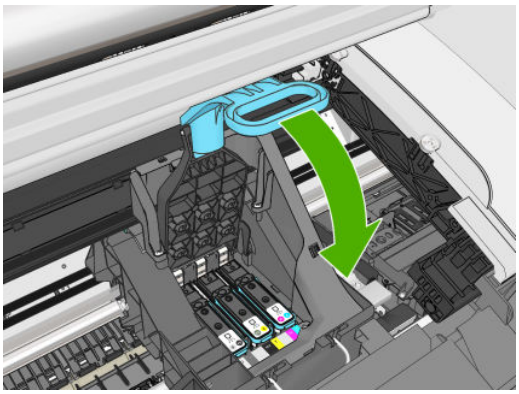

19. Ensure the end of the blue handle catches the wire loop on the near side of the carriage.

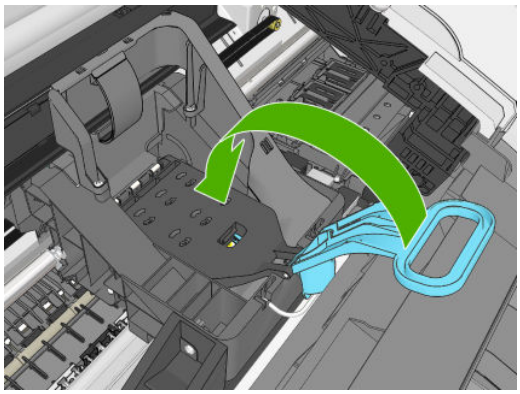

20. Lower the handle to rest on the carriage cover.

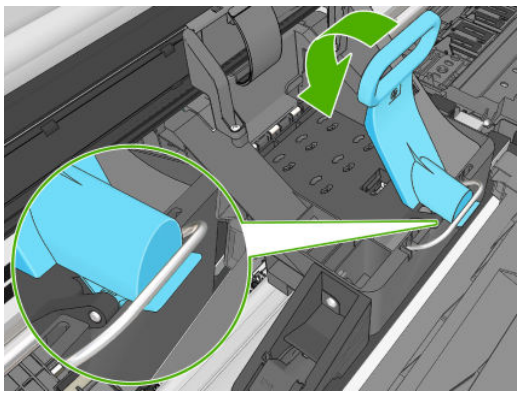

When all the printheads have been inserted correctly and are accepted by the product, the product beeps.

NOTE: If the product does not beep when you insert the printhead and the **Replace** message appears on the Touch Control Panel display, the printhead may need to be reinserted.

21. Lower the scanner.

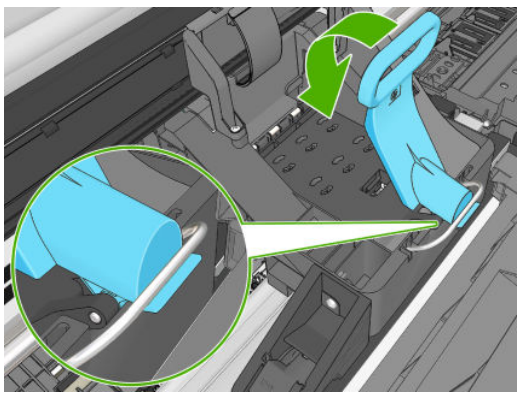

22. The Touch Control Panel display confirms that all printheads are correctly inserted. The product starts checking and preparing the printheads. The default routine process, when all printheads are changed, takes 10 minutes. If the product finds problems in preparing the printheads, it takes longer, up to 45 minutes. For

a single printhead insertion, the times vary between 2 and 40 minutes. After all printheads are checked and prepared, the printhead realignment procedure runs automatically if paper is loaded.

The Touch Control Panel display confirms that all printheads are correctly inserted.

The product will start checking and preparing the printheads. The default routine process, when all printheads are changed, takes 25 minutes. If the product finds problems in preparing the printheads, it will take longer, up to 55 minutes. For a single printhead insertion, the times vary between 15 and 35 minutes. After all printheads are checked and prepared, for the printhead realignment.

Aligning Printheads

▲ Precise alignment between printheads is essential for accurate colors, smooth color transitions, and sharp edges in graphical elements. Your product has an automatic printhead alignment process which runs a printhead has been accessed or replaced.

In cases where the paper has jammed, you have used a custom paper, or are experiencing problems with color accuracy you may need to align the printheads. If the paper has jammed, it is recommended that you reinsert the printheads and initiate the realignment procedure with the Image Quality Maintenance menu.

NOTE: Do not use transparent and semi-transparent paper to align the printheads. Photo paper is recommended for the best quality.

Reinsert Printheads Procedure

1. If the realignment process is running and the wrong paper is loaded, press the Cancel button on the Touch Control Panel. Do not print if the realignment process has been canceled. You can restart the alignment with the Image Quality Maintenance menu procedure.
2. Load the paper you wish to use. You can use a roll that is at least 610 mm (24 in) wide or a cut sheet that is A2 landscape or larger.
3. Remove and re-insert all the printheads, see Remove a printhead and Insert a printhead. This will start the printhead alignment procedure.
4. The process will take about six minutes. Wait until the Touch Control Panel display shows the process complete before using the product.

Image Quality Maintenance Procedure

1. Load the paper you wish to use. You can use a roll that is at least 610 mm (24 in) wide or a cut sheet that is A2 landscape or larger. Do not use transparent and semi-transparent paper to align the printheads. Photo paper is recommended for the best results; plain, bond and thin coated papers provide acceptable but marginal results.
2. Press the Menu button to access the main menu and select the Image Quality Maintenance menu icon.
3. Select Align printheads. The product will check to see if it has enough paper to run the realignment.
4. The realignment procedure will now be performed and the realignment pattern will be printed.
5. The process will take about five minutes. Wait until the Touch Control Panel display shows the process complete before using the product.

Scanning errors during alignment

If the alignment process FAILs, a Scanning error message is displayed on the Touch Control Panel. This means that the alignment has not completed successfully. The problem may be due to:

- The paper used was not valid, repeat the alignment with valid paper.
- Printhead health problems, clean printheads.
- The alignment was done with the Scanner open, repeat the alignment with the cover closed.

If the problem persists after using valid paper, cleaning the printheads, and keeping the cover closed, there may be a failure in the scanning system needing reparation or the printheads, although clean, may not work and need to be replaced.

Ink cartridge and printhead status messages

Ink Cartridge Status Messages

OK	The Ink Cartridge is operating correctly and no action is required.
Missing	There is no Ink Cartridge present, or it is not properly connected to the product
Low	The **Low** message is an early warning sign and it is advisable that new supplies should be obtained of that particular color. The amount of ink remaining in the Ink Cartridge depends on it's capacity, but there is approximately 14% of ink available for the user.
Very Low	When the**Very Low** message is displayed, overnight printing should not be attempted. Changing the Ink Cartridge is strongly recommended to prevent the product from stopping halfway through a print. There is approximately 8% of ink available for the user.
Empty	The product will stop and will not be able to continue printing until a new Ink Cartridge has been installed. If this occurs halfway through printing an image, you should check the quality of this image, as stopping mid-plot can affect the print. It would be recommended to reprint the image once a new Ink Cartridge has been installed.
Reseat	You are recommended to remove the Ink Cartridge and then reinsert it.
Replace	You are recommended to replace the Ink Cartridge with a new Ink Cartridge.
Altered	There is something unexpected about the Ink Cartridge's status.
Expired	The Ink Cartridge has passed the expiration date.

Printhead status messages

OK	The Printhead is operating correctly and no action is required.
Missing	There is no Printhead present, or it is not properly connected to the product.
Test printhead separately	You are recommended to test the printheads individually to find the failing printhead. Remove all the printheads and insert them alone one by one, Closing the latch and the carriage cover after every insertion. The Touch Control Panel display will indicate the failing one showing the reseat or replace message.
Reseat	You are recommended to start the printhead removal process from the Touch Control Panel, but instead of removing the printhead, simply press the OK button on the Touch Control Panel.
Replace	You are recommended to remove the printhead and then reinsert it; if that fails, clean the electrical connections; if that fails, replace the printhead with a new printhead.
Replacement incomplete	A printhead replacement process has not completed successfully, relaunch the replacement process and let it finish completely (it is not needed to change the printheads).
Remove	The printhead is not a suitable type for use in printing (for instance, a setup printhead).

Printhead Error Codes

The following table describes the Printhead Error Codes. Refer to the above descriptions of the status messages for the appropriate action.

Error Code	Status Name	Status Message	Description	Comments
0	Working	OK	The printhead is working properly	
1	Fails Logical V	Replace	The printhead may have a vcc short	
2	Fails Continuity	Reseat		Could be caused by bad insertion. Better to reseat the PEN than to reject it.
4	Shutdown		Not used	
8	Fails Vpp	Replace	Suspected vpp ink short	
16	Temp Extremely High	Replace	Printhead temperature above normal margins	Could be caused by a short in the ink supplies
32	Temp Extremely Low	Reseat	Printhead temperature below normal margins	Could be caused by bad Vpp continuity
64	Temp too High	Replace	Printhead temperature above normal margins	Could be caused by a short in the ink supplies
128	Temp too Low	Reseat	Printhead temperature below normal margins	Could be caused by bad Vpp continuity
256	Bad Acumen Info	Replace	Critical acumen info outside margins	Printhead has a manufacturing problem
512	No Pen	Missing	There is no printhead	
1024	Bad Accumen Access	Reseat or Test Separately	Acumen cannot be accessed	Bad acumen continuity or a short; Cannot identify problem printhead
2048	Wrong Model	Replace	Wrong printhead inserted	Mechanical lockouts should prevent this. Error is redundant
4096	Mismatch	Replace	Wrong color inserted	Mechanical lockouts should prevent this
8192	CSdata Not Responding	Reseat	CSdata commuication failed	Could be caused by bad insertion
16384	CSdata Transmit Error	Reseat	CSdata commuication incorrect	Could be caused by bad contact
32768	Fails Energy Calibration	Reseat	Energy calibration failed	Could be caused by bad contact
65536	Empty Dummy	OK during Purge		Requested during purge, otherwise should be removed
131072	Full Dummy	Remove		Requested during purge
262144	End of Life	Warning	Printhead warranty expired	
524288	Expired	Warning	Printhead has used expired or non-HP ink	

Solving ink-supply problems

Most of the problems that you could encounter when working with the ink supplies are solved with guidance from the Touch Control Panel. A full list of Touch Control Panel messages are supplied in the User's Guide.

You Cannot Insert the Ink Cartridge Into the product

1. Ensure that you have the correct HP no.72 Ink Cartridge.
2. Ensure that the Ink Cartridge is the correct color for that slot.
3. Ensure that the Ink Cartridge is the correct orientation, with the color coded label at the top.

NOTE: Never clean inside the Ink Cartridge slots as this can cause damage to the product.

You Cannot Insert the Printhead Into the Product

1. Ensure that you have the correct HP no.72 Printhead.
2. Ensure that the printhead is the correct color for that slot.
3. Ensure that the printhead is in the correct orientation.
4. Ensure that the protective cap is removed from the Printhead.

The Touch Control Panel says to reset or replace a printhead

1. From the Touch Control Panel, turn the power off then on.
2. Check the Touch Control Panel display message, if it shows the ready message, the product is ready to print. If the problem remains continue with the next step.
3. Remove the printhead.
4. Clean the electrical connections on the backside of the printhead with a lint-free cloth. You can carefully use a mild rubbing alcohol if moisture is needed to remove residue. Do not use water. You can use the Flex Contacts Cleaning Tool.

   This is a delicate process and may damage the printhead. Do not touch the nozzles on the bottom side of the printhead, especially not with any alcohol.

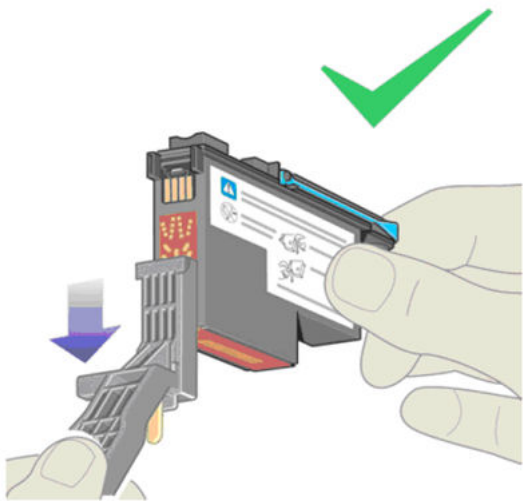

5. Reinsert the printhead.
6. Check the Touch Control Panel display message. If the problem remains, try a new printhead.

Maintaining and cleaning the printheads

Clean the printheads

As long as the product is kept turned on, an automatic cleaning is performed periodically. This ensures there is fresh ink in the nozzles and prevents nozzle clogs, which ensures color accuracy.

For image quality issues, you can also refer to the Maintenance and Troubleshooting document.

To clean the printheads, press the Menu key to return to the main menu and select the Image Quality Maintenance menu icon, then Clean printheads. If you have gone through the Image Quality Diagnostic print process, you know which colors are failing. Select to the pair of printheads which contain the failing colors. If you are not sure which colors to clean, you can also select to clean all printheads.

Cleaning all printheads takes about nine minutes. Cleaning a single pair of printheads takes about six minutes. Cleaning all printheads uses more ink than cleaning a single pair.

If you have cleaned the printheads using the Clean printheads procedure from the Touch Control Panel and are still experiencing image quality problems, you can try cleaning the printhead nozzles manually using the following procedure.

NOTE: This is a delicate process and may damage the printhead. Do not touch the electrical connections on the backside of the printhead.

You must remove the printhead (see Changing a Printhead on page 23) and using a cotton swab and a little de-ionized, distilled water, or Carriage Interconnect Wiper clean the bottom of the printhead until the residue is removed.

Flex Contacts Cleaning Tool

NOTE: The Flex Contacts Cleaning Tool is part of the Maintenance Tool Kit. All the instructions needed to use the Flex Contacts Cleaning Tool will be packaged with the kit.

Whenever you replace the Printhead, check the empty slots to see if they need cleaning. In extreme circumstances, when a Printhead is inserted, it is possible that the product will not recognize it due to the build-up of ink on the electrical connection between the Printhead and the Carriage Assembly.

Included with the product is a Flex Contacts Cleaning Tool. This tool is provided in a separate package. It also contains replacement sponges and an instruction sheet. This tool should be used for cleaning the electrical interconnects of both the Carriage Assembly and the Printhead.

If the Touch Control Panel displays the message “Reseat” or “Replace” next to the offending printhead, try cleaning the flex circuits of the Carriage and the Printheads using the Carriage Interconnect Wiper.

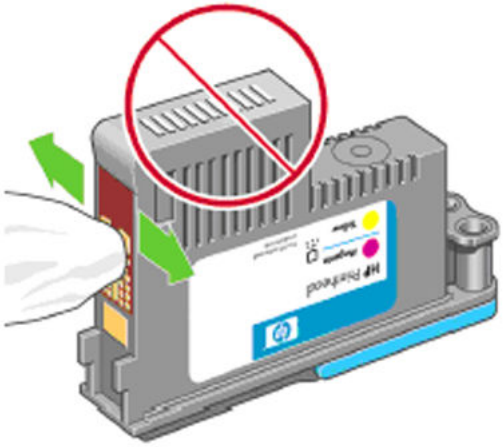

NOTE: Do not touch, wipe or attempt to clean the printhead nozzles. This can damage the printhead and reduce print quality.

Print Quality

Print Quality Troubleshooting Actions

NOTE: Phone support: For some Print Quality problems, a Call Agent can try and troubleshoot the Printer by requesting the Customer to perform certain actions. Using this process, most problems can resolved without the need of an on-site visit.

When faced with a Print Quality problem, perform the following actions in order to resolve the problem:

1. Printer Configuration:
   a. Check that the paper type loaded corresponds to the paper type selected in the front panel and in the software. You can verify the paper type selected through the Front Panel. Press . Press the paper icon.
   b. Make sure that the correct Print Quality settings are used for different types of print content.
   c. Dry time should be set to **“Optimal”**
2. Perform Printhead recovery. Press , then and then select **Image Quality Maintenance / Clean Printheads**
3. Media:
   a. Select the correct media type through the front panel when loading it
   b. Make sure that HP or HP-approved media is being used.
4. Perform the Printhead Alignment. Press , then and then select **Image Quality Maintenance/ Align Printheads**),using the same paper type with which you were experiencing unacceptable image quality, if feasible (some paper types are not suitable for Printhead Alignment).
5. Check if the latest version of the firmware is installed. If not, install the latest firmware revision.

The Service Image Quality Diagnostic Print

What is the Service Image Quality Diagnostic Print?

The Printer contains an internal Image Quality Test which helps you to diagnose the possible source of any image quality defects. The Service IQ Diagnostic Print is available in the following options:

1. Image Quality Service Best Plot. This plot helps you to diagnose in more detail the possible source of any image quality defects. It is accessible
   a. Diagnostic Part 1: Printhead Reliability Test. The purpose of this test is to identify which Printhead is faulty.
   b. Diagnostic Part 2: Printhead Alignment Test. This test is designed to check any color-to-color and bi-directional misalignment the printer may have.
   c. Diagnostic Part 3: Printheads and Paper Advance test. This test is designed to check whether the Printheads and the Media Advance Mechanism are working correctly.
2. Image Quality Service Normal Plot. This plot is the same as the Image Quality Service Best Plot but uses the Normal Print Mode.
3. Advanced Diagnostic Plot. These tests provide more information of the IQ defects that we could find in the Image Quality Service plot. For more information, refer to Advanced Diagnostic Prints on page 44.

Considerations for Printing the Diagnostic Print

1. The IQ Diagnostic Print prints in A3 and B sizes so you must have media loaded (roll or sheet) that is this size or larger.
2. Use the same type of media that the customer was using when they found the image quality.
3. If the customer is using non-HP media and after the Image Quality Test you still have the same image quality problems, change to genuine HP media and repeat the Image Quality Test.
4. If you do not see any problems with the Image Quality Test, the problem may not be with the printer itself. The problem may be with the RIP or the driver.

If you do see problems with the Image Quality Test, continue with the Advanced Diagnostic procedures which will help you diagnose the problem.

Printing the Diagnostic Print

1. In the Service Utilities submenu, scroll to **"Diagnostic Print"** and press OK.

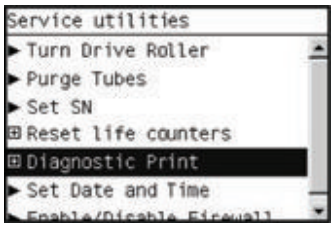

2. You will be given three options. Use the Arrow keys to make the selection and press the OK key to start printing the required Diagnostic Print or to enter the Advanced Diagnostics menu.

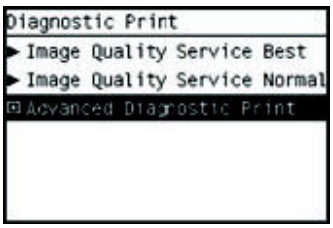

3. If you selected the Advanced Diagnostics Prints in the previous step, use the Arrow keys to make the required selection Paper Advance, Visual Alignment Diagnostic, Nozzle Health, Force Drop Detection or Print Banding Plot, and press the Enter key to start printing.

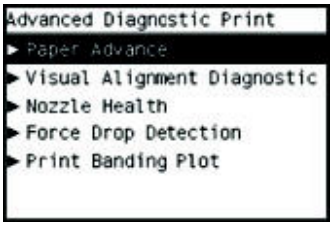

4. Make sure media is loaded, the Media Lever is lowered and that the Ink System is correctly installed. Press the OK key to print the Diagnostic Print or press Back/ Cancel to exit without printing the Diagnostic Print.

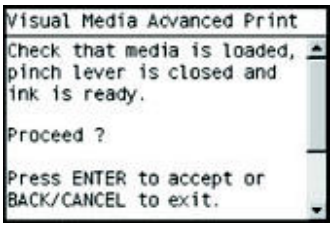

5. The selected Diagnostic Print will now be printed.

Reading the Diagnostic Print Results

Diagnostic Part 1: Printhead Reliability

The Nozzle Print Test is designed to check if the Printhead nozzles print correctly.

The nozzles (bottom of the plot) are printed in a one-pass full swath mode. The diagnostics test prints out every single nozzle of each Printhead without applying an error hiding or alignment algorithm.

For each Printhead, you can see both the adjacent and the consecutive nozzles.

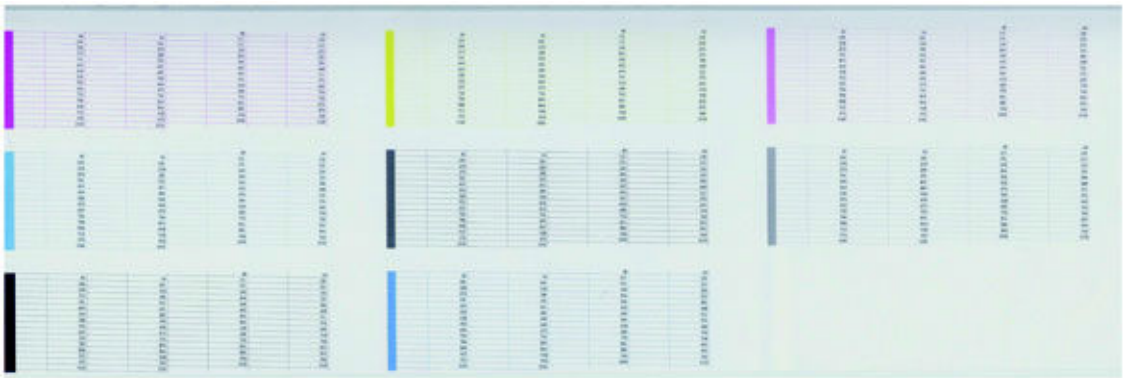

If any nozzles are not printing correctly they will be shown on the right of each Printhead Nozzle test. There is a series of numbered stepped diagonal lines. If one or more of the nozzles are clogged, malfunctioning or mispositioned, you will see that the stepped lines are broken or misdirected in one or more places.

Below, the stepped lines highlighted in yellow are broken. When the line is completely broken, this means the nozzle is out.

Below, the stepped lines highlighted in yellow are misdirected. When the line is misdirected, this means the nozzle is malfunctioning or out of position.

On the left of each Printhead Nozzle test, there is a series of horizontal straight lines. If one or more nozzles are misdirected there will be unequal spaces between the corresponding lines.

Corrective Action

If the printer has nozzle defects, you can still get perfect print quality results. The printer can automatically compensate for nozzle defects, so there is no need to replace the Printhead.

The method of improving Nozzle Defects is to:

1. Recover the Printheads, using the Front Panel. Press , then and then select **Image Quality Maintenance/ Clean Printheads**.
2. Reprint the Printhead Nozzles Test Plot to verify that the defective nozzles have been corrected.
3. If the problem continues, replace the defective Printhead.

Diagnostic Part 2: Printhead Alignment

This test is designed to check any color-to-color and bi-directional misalignment the printer may have.

If the Printer is experiencing **horizontal** misalignment problems, the Alignment Test will show something like this:

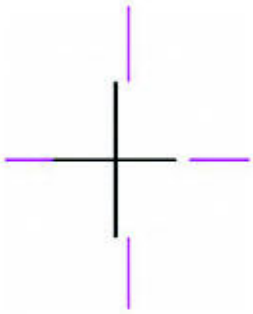

If the Printer is experiencing **vertical** misalignment problems, the Alignment Test will show something like this:

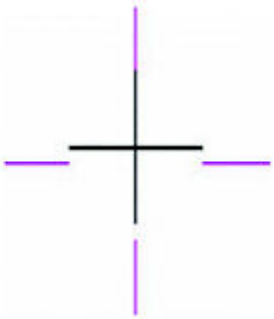

If the Printer is experiencing **bi-directional** misalignment problems, the Alignment Test will show something like this:

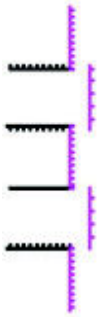

Corrective Action

▲ Perform the Printhead Alignment using the Front Panel. Press , then and then select **Image Quality Maintenance/ Align Printheads**.

Diagnostic Part 3: Printheads & Paper Advance

This test is designed to check whether the Printheads and the Paper Advance Mechanism are working correctly. This part of the Image Quality Test should **NOT** be used to check for color consistency or accuracy.

Banding

If the Printer is experiencing a banding problem, you will see repetitive horizontal bands within the printed image.

- Darker horizontal bands or lines repeated along the vertical band (from top to bottom at the same distance).
- Whiter horizontal bands or lines along the vertical band (from top to bottom at the same distance).

The plot is printed in Best or Normal mode (according to the menu option selected) with Error Hiding ON. The top band has 100% ink density patches while the bottom band has 50% ink density patches.

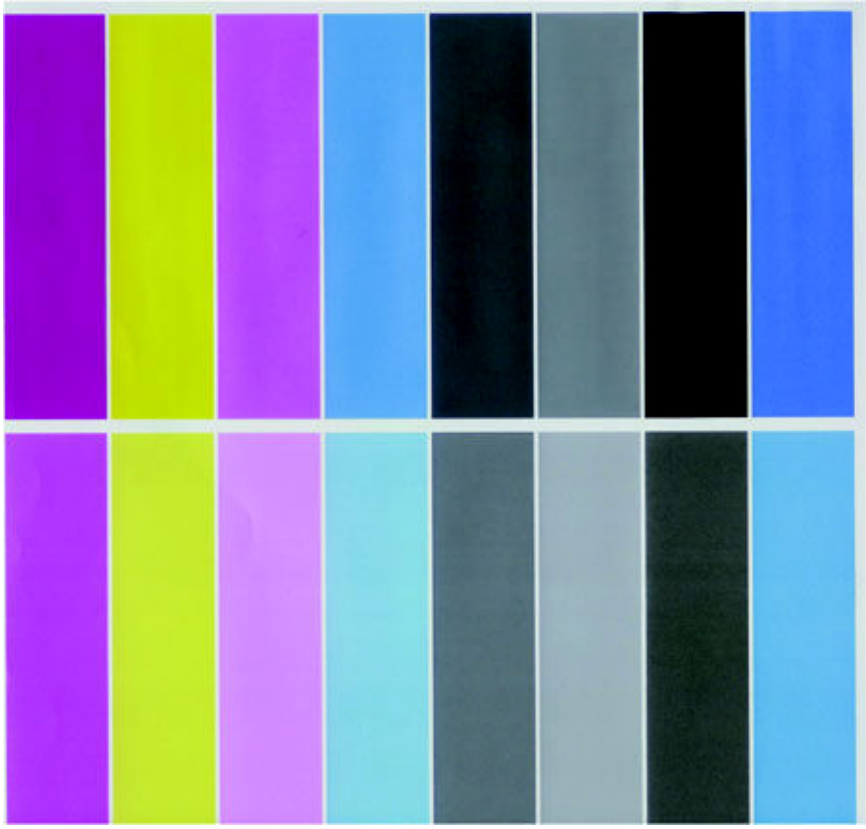

Troubleshooting Banding Problems

If banding **does NOT** occur in **ALL** the colors, then it is more than likely a Printhead problem. In this case, try the following:

1. Check that the appropriate print quality settings are being used (refer to the User's Guide for more information).
2. Recover the printheads using the option through the Front Panel. Press , then and then select **Image Quality Maintenance/ Clean Printheads**. Reprint the Diagnostic Print or the print file and if the problem persists, replace the faulty Printhead.

If banding **does** occur in ALL the colors, then it is more than likely a Paper Advance problem:

- If the bands are light, it means that the paper has advanced too much.
- If the bands are dark, it means that the paper hasn't advanced enough.
- In high quality modes, graininess in ALL colors can indicate problems either with alignment or Paper Advance.

Corrective Action

In order to solve problems that result in banding, try the following:

1. Check that the appropriate print quality settings are being used (refer to the User's Guide for more information).
2. Check that the loaded media is the same type as selected in the printer. You can verify the media type selected through the Front Panel. Press , then press paper icon.

3. If the customer is using low quality paper, try recommending better quality paper (preferably HP paper). Printer performance can only be guaranteed by using recommended papers.

4. Perform the Paper Advance Calibration using the same type of paper that will be used for the final print . Press then and then select **Image Quality Maintenance/ Paper Advance Calibration/ Calibrate Paper Advance**.

   If there is white point banding in only one color band and the problem cannot be fixed using the Printhead recoveries, in some cases using the force a drop detection option can fix this issue. See Force Drop Detection on page 51.

No Printing Defects Found in the Diagnostic Print

If all the test patterns from the Diagnostic Print are correct and you still experience Image Quality problems, you can use the following procedures to resolve the problem.

- Reading the Diagnostic Print Results on page 39
- Printhead Alignment on page 48
- Nozzle Health on page 50
- Force Drop Detection on page 51

Advanced Diagnostic Prints

What are the Advanced Diagnostic Prints?

Advanced Diagnostic Plot. These tests provide more information of the IQ defects found in the Image Quality Service plot.

The Advanced Diagnostic Plot is divided into the following parts:

- Visual Media Advanced Diagnostic. Used to check advance reliability.
- Visual Alignment Diagnostic. Used to check pen alignment reliability.
- Visual Nozzle health Diagnostic. Used to check nozzle health reliability.
- Force Drop Detection. Used to reset the nozzle health historic data base and force new drop detection.

Printing the Advanced Diagnostic Prints

1. In the Service Utilities submenu, scroll to **"Diagnostic Print"** and press OK.

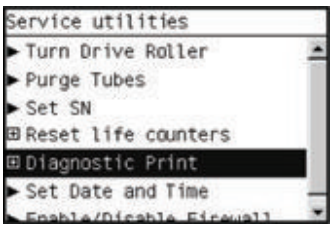

2. You will be given three options. Use the Arrow keys to select and press the **Advanced Diagnostics** menu.

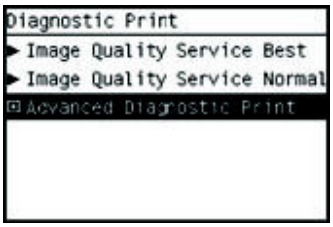

3. From the displayed options, use the Arrow keys to make the required selection Paper Advance, Visual Alignment Diagnostic, Nozzle Health, Force Drop Detection or Print Banding Plot, and press the Enter key to start printing.

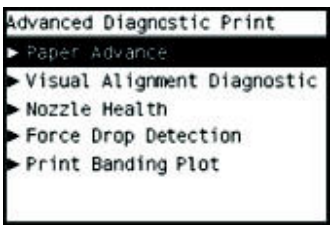

4. Make sure media is loaded, the Media Lever is lowered and that the Ink System is correctly installed. Press the OK key to print the Diagnostic Print or press Back/ Cancel to exit without printing the Diagnostic Print.

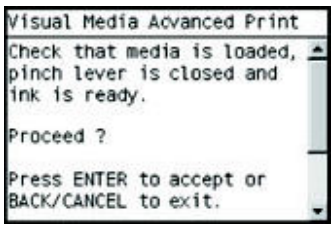

5. The selected Advanced Diagnostic Print will now be printed.

Reading the Advanced diagnostic Print Results

Paper Advance

This plot helps you to visually check any alignment problems of the printer. You use it to precisely measure the media advance error with a one dot row accuracy, and to verify the stability of the media advance.

The whitest vertical line should be positioned in the 0 offset column with minor variations between +2 and -2 columns. If the offset is not positioned on the 0 column or between +2 and -2 columns and the whitest vertical varies greatly, the printer requires Paper Advance Calibration. Press then and then select **Image Quality Maintenance / Paper Advance Calibration / Calibrate Paper Advance**.

NOTE: It is very important to verify that the loaded media is the same media type as selected in the front panel. You can verify the media type selected through the Front Panel. Press then the Paper icon. The wrong type of paper selected will produce an offset error in the Paper Advance.

The following plot shows correct media advance, there is a straight white line positioned close to the 0 column for the majority of the points.

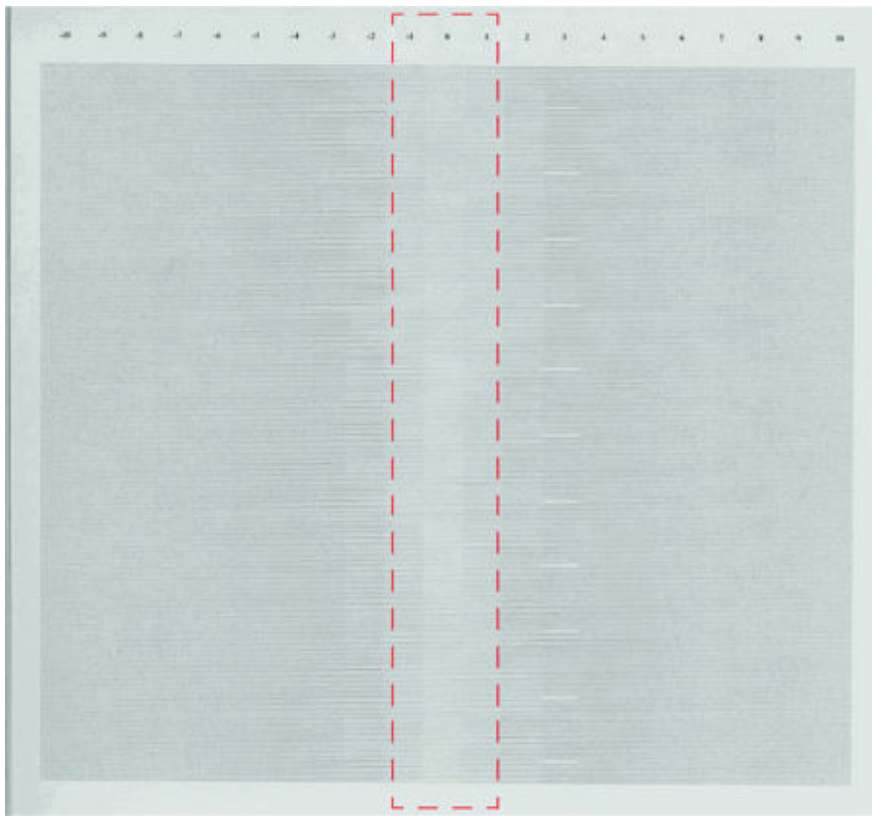

The following plot shows a bad media advance, there is a straight white line positioned close to the -6 column, instead of the 0 column for the majority of the points.

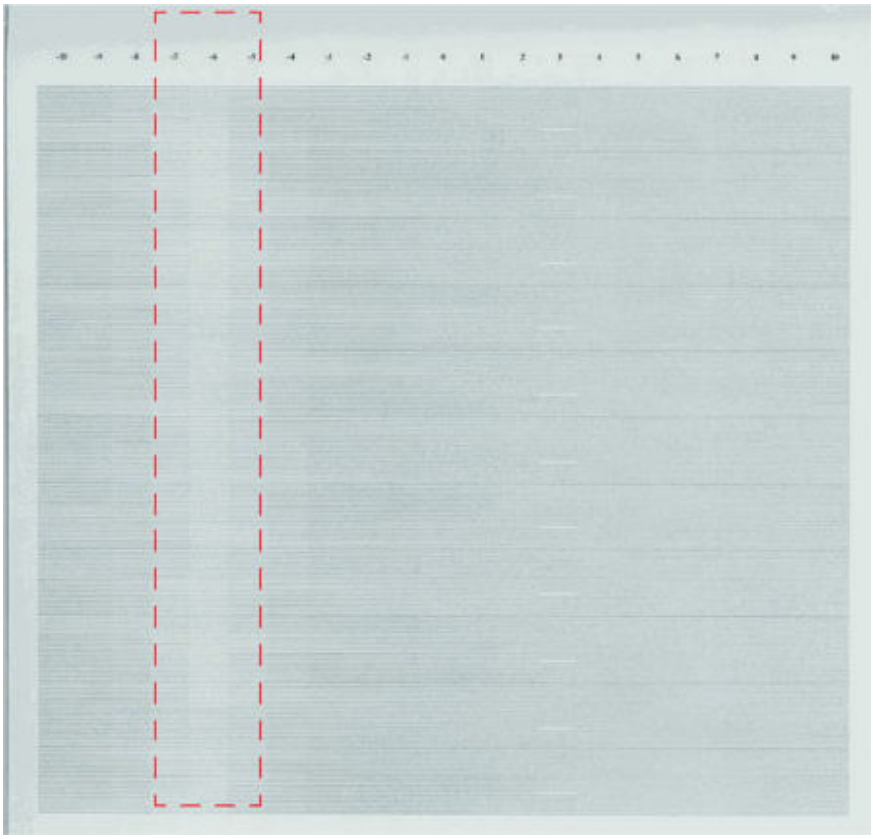

Corrective Action

To fix Paper Advance problems, try the following:

1. Check the Paper Advance Calibration Status. Press then the Paper icon. At the bottom, the Front Panel displays the Paper Advance Calibration status. There are three status messages:
   - DEFAULT. The paper loaded is recognized as HP paper, which is already optimized and calibrated for the printer. Do not calibrate the Paper Advance for this paper.
   - RECOMMENDED. The paper loaded is NOT recognized as HP paper, and Paper Advance values have NOT been customized for this paper type. In this case, calibrate the Paper Advance from the user menu.
   - OK. This indicates that the paper loaded has been calibrated before. If the printer continues to have banding and graininess problems, calibrate the Paper Advance from the user menu.

NOTE: Whenever the printer's firmware is upgraded, the paper advance calibration values will be reset to factory default.

2. To calibrate the Paper Advance from the user menu, Press then and then select **Image Quality Maintenance / Paper Advance Calibration / Calibrate Paper Advance**.

NOTE: It is very important to verify that the loaded media is the same media type as selected in the front panel. You can verify the media type selected through the Front Panel. Press then the Paper icon. The wrong type of paper selected will produce an offset error in the Paper Advance.

NOTE: Some paper types are not suitable for Paper Advance Calibration. Do not use colored papers or transparent materials such as translucent bond, clear film, matte film, tracing paper, or vellum.

Paper Advance calibration from the user menu will only calibrate the Paper Advance for the paper type loaded in the printer at that moment.

3. If Calibrate Paper Advance has mostly solved the problem, try Adjust Paper Advance to fine tune the Paper Advance. Press then and then select **Image Quality Maintenance / Paper Advance Calibration / Adjust Paper Advance**.

   Select the percentage of change from -100% to 100%. To correct light banding, decrease the percentage. To correct dark banding, increase the percentage.

4. The Paper Advance calibration from the service menu will calibrate the Paper Advance for ALL paper types. This action is recommended when:

   - The Paper Advance calibration from the user menu does not solve the problem.
   - The Paper Advance problems affect ALL paper types.

The procedure for Paper Advance Calibration is in the service menu Paper Advance Calibration on page 208.

Printhead Alignment

This plot helps you to visually check any alignment problems of the printer. You use it to precisely measure the alignment error with a one dot row accuracy. For the printer to be considered correctly aligned, the results must be within ± 2 dot row.

The illustration shows the complete Printhead Alignment that identifies each of the specific alignment test results covered. The plot is split into four areas printed at different speeds and resolutions: 25ips@1200dpi, 35ips@1200dpi, 36ips@600dpi and 50ips@600dpi.

What to see in the AutoPen Alignment Diagnostics

1. At the left we have two checks for the pen to pen alignment in scan axis direction (Pen2Pen-Fwd & Pen2Pen-Rev). It is forward and reverse. The area to check is the junction (marked with "-") of the black with the rest of colors. The arrows show the printing direction.
2. The bidirectional check is at the top, marked as number 2 (Bidir). Check that the lines are continuous without a gap. The junction is marked with "-". The arrows show the printing direction.
3. The pen to pen alignment in paper axis direction (PAD) is marked as number 3. The area to check is the junction (marked with "|") of the black with the rest of colors.
4. The ThetaZ of the printhead are checked in the area marked as 4. It checks in forward and reverse direction. The area to check is the junction (marked with "-"). The lines have to be continuous. The arrows show the printing direction.
5. The area marked as number 5 is a reference legend that shows junction misalignments of 2, 4 and 6 dots. The junction to check has to be equal to or below 2 in all the cases. If the error we appreciate is above 2 dots, then realign the printheads again.

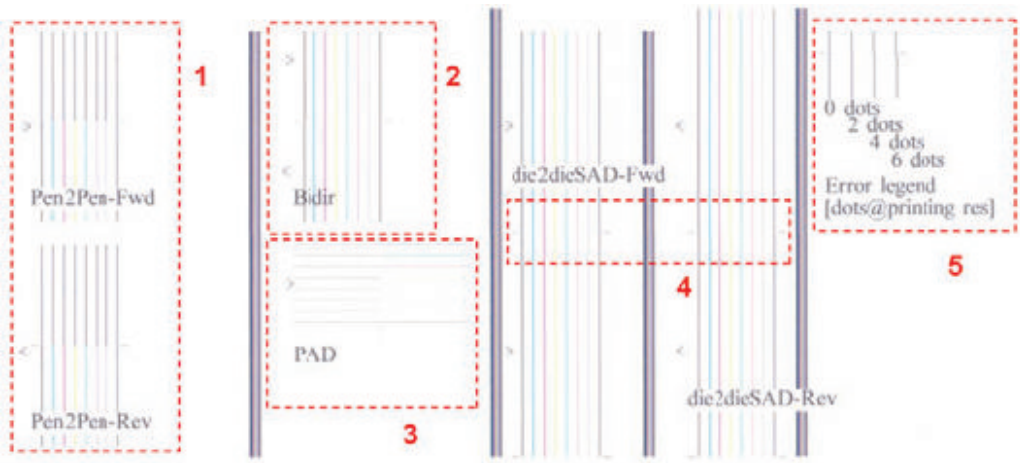

In the next example, the Pen2Pen (both Fwd and Rev) is above these 2 dots and the unit should be realigned. Same happens with the ThetaZ (die2dieSAD). The rest of the pattern shows a right alignment.

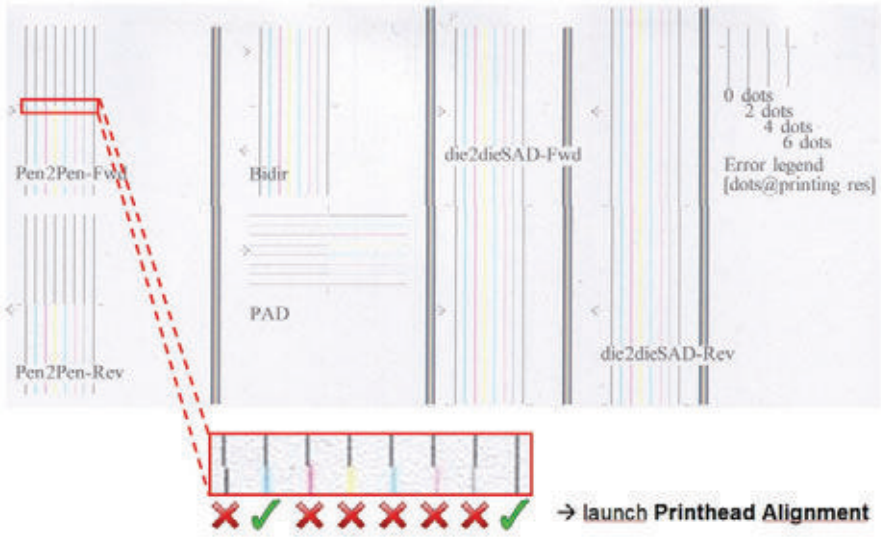

Nozzle Health

The print contains three separate parts.

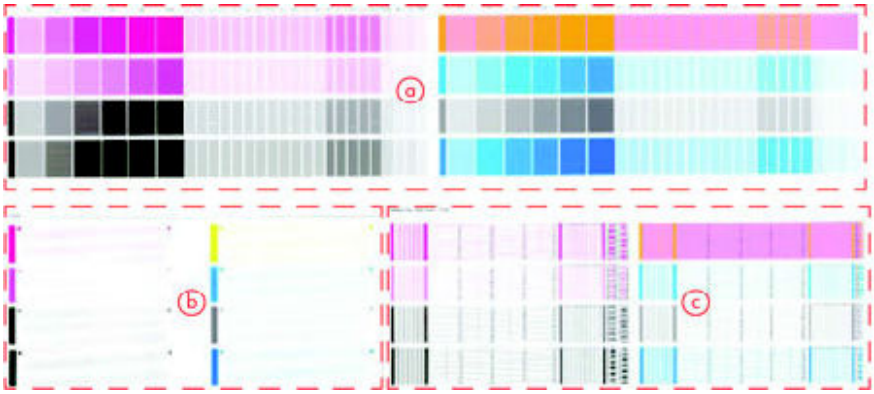

1. The Variable Frequency Nozzle health plot with odd/even nozzles separation. This is used to detect misdirected or weak nozzles, nozzles not working correctly at all frequencies.
2. Inspector measuring tool test plot.

NOTE: Test 2 should NOT be used by Service Engineers.

3. **Nozzle Print Test** which is also part of the Image Quality Service Plot. This test is designed to check that the Printhead nozzles print correctly. The test prints out every single nozzle of each Printhead. No error hiding or Printhead Alignment algorithm is applied. For each Printhead, you can see both the adjacent and the consecutive nozzles.

This is what you would see in the **Nozzle Print Test** part if there are nozzles not printing correctly:

1. On the right of each Printhead Nozzle test, there is a series of numbered stepped diagonal lines.

   If one or more of the nozzles are malfunctioning or out of position, you will see that the stepped lines are broken or misdirected in one or more places.

2. On the left of each Printhead Nozzle test, there is a series of horizontal straight lines. If one or more nozzles are misdirected there will be unequal spaces between the corresponding lines.

Corrective Action for Nozzle Defects

If the printer has nozzle defects, it does not mean that you will not get perfect print quality results. The printer has automatic procedures to hide many nozzle defects.

1. Perform Printhead recovery using the option through the Front Panel. Press , then and then select **Image Quality Maintenance / Clean Printheads**
2. Reprint the Nozzle Print test to check that the defective nozzles have been corrected.
3. If the problem continues, replace the defective Printhead.

In the next example, the Pen2Pen (both Fwd and Rev) is above these 2 dots and the unit should be realigned. Same happens with the ThetaZ (die2dieSAD). The rest of the pattern shows a right alignment.

Force Drop Detection

If the **Nozzle Print Test** plot has persistent white point banding in only one color that cannot be fixed with a printhead recovery, you can use this option to resolve the problem by resetting the nozzle health data base so that all nozzles are assumed to be correct.

Once the nozzle health data base has been reset drop detection is forced. The normal cause of this white point banding in a single color is the incorrect detection of failed nozzles by the drop detector.

Troubleshooting Print Quality Problems

Print Quality General Advice

1. To achieve the best performance from the printer, only genuine HP accessories and supplies should be used.
2. Make sure that the **paper type** selected in the Front Panel is the same as the paper type loaded into the Printer.
3. Make sure to use the most appropriate print quality settings for your purposes. A lower print quality is likely to be seen if the print quality slider has been moved to the **Speed** end of the scale, or the custom quality level set to **Fast**.
4. Check that the environmental conditions (temperature, humidity) are within the temperature/ humidity range as specified for the Printer (refer to the User's Guide for more information).
5. Check that the ink cartridges and printheads have not exceeded their expiration dates.

The procedure for Paper Advance Calibration is in the service menu Paper Advance Calibration on page 208.

Horizontal Lines Across the Image (Banding)

Description of problem

When you look at the image you have printed, there are horizontal lines across the image. Shown below is an example of what you might see if you have this problem:

Corrective Action

1. Check that the paper type loaded corresponds to the paper type selected in the front panel and in the software. You can verify the paper type selected through the Front Panel. Press then the Paper icon.
2. Check that the appropriate print quality settings are being used (refer to the User's Guide for more information) and reprint the image. In some cases print quality problems can be resolved by selecting a higher print quality level.

3. Print the Service Image Diagnostics Print, and clean any printheads that need cleaning. Reprint the job in case the problem has been solved.

4. Check the paper advance calibration status. If the status is PENDING, perform the Paper Advance Calibration. Press then and then select **Image Quality Maintenance/ Paper Advance Calibration/ Calibrate Paper Advance**.

5. After calibration reprint the job.

Lines are Missing, Too Thin, Too Thick

Description of problem

Shown below is an example of what you might see if you have this problem:

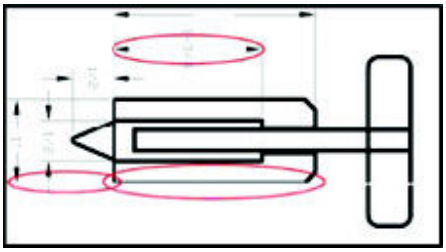

Corrective Action

1. Check that the paper type loaded corresponds to the paper type selected in the front panel and in the software. You can verify the paper type selected through the Front Panel. Press then the Paper icon.

2. Check that the appropriate print quality settings are being used (refer to the User's Guide for more information). Select the custom print quality options in the Print dialog, try turning on the Maximum detail option. Reprint the job in case the problem has been solved.

3. If the resolution of the image is greater than the printing resolution, a loss of line quality may be seen. You can find the Max. Application Resolution option in the Windows driver dialog's Advanced tab, under **Document Options > Printer Features**. Reprint the job in case the problem has been solved.

4. Check the Printhead alignment status. If the status is PENDING, perform the Printhead Alignment. Press then and then select **Image Quality Maintenance/ Align Printheads**.

5. Check the paper advance calibration status. If the status is PENDING, perform the paper advance calibration. Press then and then select **Image Quality Maintenance/ Paper Advance Calibration / Calibrate Paper Advance**.

6. Use Part 3 of the Image Quality Diagnostic Print, check if there are a significant amount of nozzles out in the color that is **actually causing** the problem (if see you a problem with the Black color in the customer print, then only check the Black printhead in the Image Quality Diagnostic Print). If there is a significant amount of nozzles out then replace the defective Printhead.

Problems with Stepped Lines

Description of problem

When you look at the image you have printed there are 'stepped lines' in the borders of arrows and diagonal lines. The lines should be straight with no stepping.

Shown below is an example of what you might see if you have problems with Stepped Lines:

Corrective Action

1. The problems may be inherent in the image that you are trying to print. Try to improve the image with the **application** that generated the file.
2. Check that the appropriate print quality settings are being used (refer to the User's Guide for more information).
3. Turn On the **Maximum Detail** option in the Driver.
4. Change the image rendering resolution to 300 dpi or 600 dpi depending on the printing needs. You can find the Max. Application Resolution option in the Windows driver dialog's Advanced tab, under **Document Options > Printer Features**.

Lines are Printed Double or in Wrong Colors

Description of problem

This problem can have various visible symptoms, as shown below:

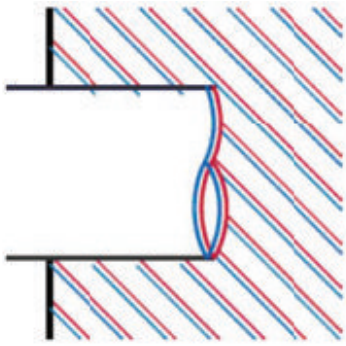

Colored lines are printed double, in different colors

Borders of colored blocks are wrongly colored

Corrective Action

Reseat the Printheads by removing them and then reinserting them.

NOTE: As you reseat the printheads, the printer will automatically align the printheads. It is important that the alignment is completed properly. See Aligning Printheads on page 30.

Lines are discontinuous

If the lines are broken in the following way:

1. Check that the appropriate print quality settings are being used (refer to the User's Guide for more information).
2. Reseat the Printheads by removing them and then reinserting them.

NOTE: As you reseat the printheads, the printer will automatically align the printheads. It is important that the alignment is completed properly. See Aligning Printheads on page 30.

Lines are Blurred (Ink Bleeds from Lines)

Description of problem

This problem is often caused by the ink soaking into the paper, making the lines blurred and fuzzy. This could be because of the humidity in the air.

Corrective Action

1. Check that the environmental conditions (temperature, humidity) are suitable for high-quality printing.
2. Make sure that the **paper type** selected in the Front Panel is the same as the paper type loaded into the Printer.
3. Try using a heavier paper type. When printing dense colors, it is recommended to use HP Heavyweight Coated Paper HP Super, Heavyweight Coated Paper or thicker Digital Fine Art papers.
4. If glossy paper is being used, try changing to a different type of glossy paper.
5. Select the custom print quality options in the Print dialog, and turn on the **More passes** option.
6. Allow the prints time to dry separately; do NOT cover or stack them.
7. Align the printheads. See theImage Quality Maintenance Procedure on page 30.

Problems with Graininess

Description of problem

Shown below is an example of what you might see if you have problems with graininess:

Corrective Action

1. Check that the paper type loaded corresponds to the paper type selected in the front panel and in the software. You can verify the paper type selected through the Front Panel. Press then the Paper icon.
2. Check that printing is on the correct side of the paper.
3. Check that the appropriate print quality settings are being used (refer to the User's Guide for more information). Select the custom print quality options in the Print dialog, and try turning on the **More passes** detail option. Reprint the job in case the problem has been solved.
4. Check the Printhead alignment status. If the status is PENDING, perform the Printhead Alignment. Press then and then select **Image Quality Maintenance/ Align Printheads**.
5. Check the paper advance calibration status. If the status is PENDING, perform the paper advance calibration. Press then and then select **Image Quality Maintenance/ Paper Advance Calibration / Calibrate Paper Advance**.
6. After Paper Advance Calibration, reprint the job.

Paper is not Flat

Description of problem

If the paper does not lie flat when it comes out of the Printer, but has shallow waves in it, you are likely to see visible defects in the printed image, such as vertical stripes. This can happen when you use thin paper that becomes saturated with ink.

Shown below is an example of what you might see if you have problems with the paper not being flat:

Corrective Action

1. Check that the paper type loaded corresponds to the paper type selected in the front panel and in the software. You can verify the paper type selected through the Front Panel. Press then the Paper icon.
2. Try using a heavier paper type. When printing dense colors, it is recommended to use HP Heavyweight Coated Paper HP Super, Heavyweight Coated Paper or thicker Digital Fine Art papers.
3. Make sure that only genuine HP paper is being used.
4. Check that the appropriate print quality settings are being used (refer to the User's Guide for more information).
5. Check that the environmental conditions (temperature, humidity) are within the temperature/ humidity range as specified for the Printer (refer to the User's Guide for further information).

Print Scuffing or Scratching when Touched

Description of problem

The black ink pigment can smudge when touched by a finger, a pen, or some other object. This is particularly noticeable on coated paper, matte proofing paper, and fine art material.

Glossy paper may be extremely sensitive to damage from the basket or to anything else that it contacts soon after printing, depending on the amount of ink used and the environmental conditions at the time of printing.

Corrective Action

1. Handle prints carefully.
2. Avoid stacking prints on top of each other.
3. Disable the automatic cutter before printing, so that the print will not fall into the basket.

Ink marks on the paper

This problem may occur for several different reasons.

Horizontal smears on the front of coated paper

If a lot of ink is used on plain or coated paper, the paper absorbs the ink quickly and expands. As the printheads move over the paper, the printheads may come into contact with the paper and smear the printed image. This problem is normally seen only on cut sheets of paper (not on roll paper).

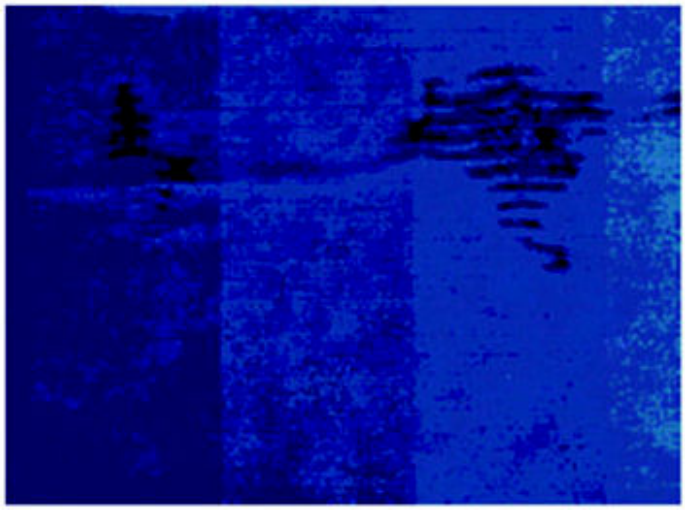

Corrective Action

1. Check that the paper type loaded corresponds to the paper type selected in the front panel and in the software. You can verify the paper type selected through the Front Panel. Press then the Paper icon.
2. Use a recommended paper type and the correct print settings.
3. If using sheet paper, try rotating the sheet 90 degrees. The orientation of the paper fibers may affect performance.
4. Try using a heavier paper type. When printing dense colors, it is recommended to use HP Heavyweight Coated Paper HP Super, Heavyweight Coated Paper or thicker Digital Fine Art papers.
5. Try to increase the margins by relocating the image to the center of the page with the software application being used.

Ink marks on the back of the paper

This can happen after a lot of border less printing, especially with nonstandard paper sizes. Ink residues on the platen are likely to mark the back of the paper.

Corrective Action

Clean the platen with a soft cloth. Clean each rib separately without touching the foam between the ribs.

Problems with the Edges of objects

Stepped or not sharp

The edges of objects or lines appear to be poorly defined or lighter in density than expected.

Corrective Action

If the print quality slider has already been set to **Quality** in the Print dialog, select the custom print quality options, and try setting the quality level to **Normal** (refer to the User's Guide for more information).

Darker than expected

The edges of objects seem darker than expected.

Corrective Action

If the print quality slider has already been set to **Quality** in the Print dialog, select the custom print quality options, and try setting the quality level to **Normal**.

Bronzing

When printing on photo paper with gray and black ink only a gloss differential problem can be encountered when light is directly reflected from the print, producing 'bronzed' reflections where ink has been laid.

Corrective Action

Use the Full set of inks option.

Black and white prints do not look neutral

Consider printing in grayscale (color options submenu inside the printing preference menu). See the User's Guide for more information.

Horizontal lines at the end of a cut sheet print

There is a type of defect that only affects the end of a print, within approximately 30 mm of the trailing edge of the paper. Some very thin horizontal lines may be seen across the print.

Corrective Action

1. Print the Service Image Diagnostics Print, and clean any printheads that need cleaning. Reprint the job in case the problem has been solved.
2. Try printing with roll paper.
3. Try using larger margins around the image.

Vertical lines of different colors

The print has vertical bands of different colors along it.

Corrective Action

1. Try using a heavier paper type. When printing dense colors, it is recommended to use HP Heavyweight Coated Paper HP Super, Heavyweight Coated Paper or thicker Digital Fine Art papers.
2. Use higher print quality settings (refer to the User's Guide for more information).

White spots on the print

White spots are seen on the print. This is probably due to paper fibers, dust, or loose coating material.

Corrective Action

1. Clean the paper manually with a brush before printing, to remove any loose fibers or particles.
2. Always keep the cover of the printer closed.
3. Protect paper rolls and sheets by storing them in bags or boxes.

Problems with Color Accuracy

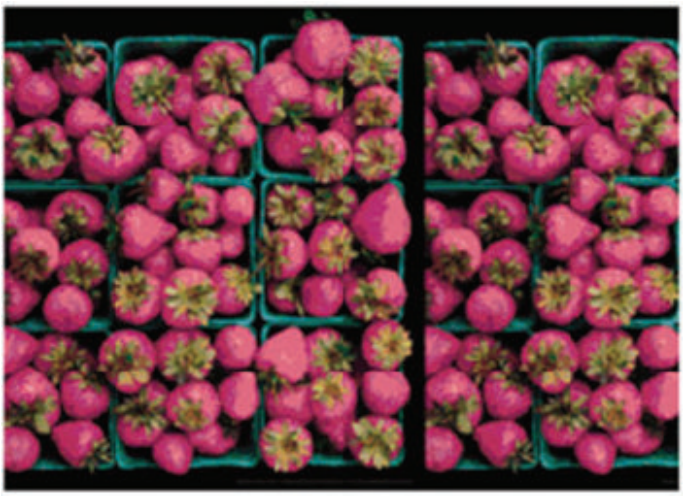

Corrective Action

1. Ensure that the paper type being used has been color calibrated, which will give color consistency from print to print, and from Printer to Printer.
2. Check that printing is on the correct side of the paper.
3. Check that the appropriate print quality settings are being used (refer to the User's Guide for more information). Reprint the job in case the problem has been solved.
4. If the problem consists of color differences between your print and your monitor, please follow the instructions in the "How to calibrate your monitor" section of the HP Color Center. At this point, you may wish to reprint your job in case the problem has been solved.

5. Select suitable options in the application (refer to the User's Guide for more information).
6. Print the Service Image Diagnostics Print, and clean any printheads that need cleaning. Reprint the job in case the problem has been solved.

Color accuracy using EPS or PDF images in page layout applications

Page layout applications such as Adobe InDesign and QuarkXPress do not support color management of EPS, PDF, or grayscale files.

If these types of files have to be used, try to ensure that the EPS, PDF, or grayscale images are already in the same color space that is intended to be used later on in Adobe InDesign or QuarkXPress. For instance, if the final objective is to print the job in a press that follows the SWOP standard, at the time of creating the EPS, PDF or grayscale the image should be converted into SWOP.

Output Only Contains a Partial Print

If the output that was expected only contains a partial image, then try the following to resolve the problem:

1. Was the Cancel key pressed before all the data was received by the Printer? If so, send the file again and make sure that the Cancel key is not pressed.
2. The **I/O Timeout** setting may be too short. Increase the I/O timeout setting (Setup Menu/I/O Setup/ IO Timeout) and then send the file again.
3. There might be a communications problem between the Printer and Computer. Check the USB or network cable between the computer and the Printer to make sure it is not damaged and is connected correctly.
4. Make sure that the software settings are correct for the current page size (e.g. long-axis prints).
5. If network software is being used, make sure it has not timed out.

Problems with Image Clipping

This normally indicates a discrepancy between the actual printable area on the loaded paper and the printable area as understood by the software. This kind of problem can often be identified before printing by previewing the print.

1. Check the actual printable area for the paper size that is loaded. printable area = paper size – margins.
2. Check what the software understands to be the printable area (which it may call "printing area" or "imageable area"). For example, some software applications assume standard printable areas that are larger than those used in this Printer.
3. If a custom page size with very narrow margins has been defined, the printer may impose its own minimal margins, clipping the image slightly. Consider using a larger paper size, or border less printing.
4. If the image contains its own margins, it may be possible to print it successfully by using the Clip Contents by Margins option.
5. If a very long image needs to be printed on a roll, check that the software is capable of printing an image of that size.
6. The page may have been rotated from portrait to landscape on a paper size that is not wide enough.
7. If necessary, change the printable area in the software.
8. If necessary, reduce the size of the image or document in your software application, so it fits between the margins.

Another Possible Explanation

Some applications, such as Adobe Photoshop, Adobe Illustrator, and CorelDRAW, use an internal 16– bit coordinate system which means that they cannot handle an image of more than 32,768 pixels. If you try to print an image larger than this from these applications, the bottom of the image will be clipped. In this case, the only way to print the whole image is to reduce the resolution so that the whole image requires fewer than 32,768 pixels. The HP-GL/2 printer driver contains an option called **Compatibility with 16–bit applications**, which can be used to reduce the resolution of such images automatically. This option can be found in the Advanced tab, under **Document Options > Printer Features**.

Some objects are missing from the printed image

Large quantities of data may be necessary to print a high-quality large format print job, and in some specific workflow there may be issues that can lead to some objects missing from the output.

Corrective Action

1. In the **Advanced** tab, select **Document options, Printer features**, and set Send job as bitmap to **Enabled** (HP-GL/2 driver only).
2. In the **Advanced** tab, select **Document options, Printer features**, and set 16-bit App. Compatibility to **Enabled**.
3. In the **Advanced** tab, select **Document options, Printer features**, and set Max. Application resolution to **300**.

The above settings are mentioned for troubleshooting purposes and may adversely affect the final output quality or the time necessary to generate the print job. Therefore, they should be restored to their default values if they do not help to solve the problem.

When working under Mac OS, the above settings are not available. Instead, try reducing the resolution of bitmap images in the application software being used.

A PDF file is clipped or objects are missing

In older versions of Adobe Acrobat or Adobe Reader, large PDF files could be clipped or lose some objects when printing with the HP-GL/2 driver at high resolution. Upgrade the Adobe Acrobat or Adobe Reader software to the latest version. From version 7 onwards, these problems should be solved.

Connectivity troubleshooting

Connectivity problems are resolved differently for USB, embedded LAN and Jetdirect connectivity. Follow the advice given in the appropriate section below.

Embedded LAN connectivity troubleshooting

Perform the following procedure, checking the connectivity carefully after each step to see whether the problem has been fixed.

1. Change the LAN cable.
   a. Disconnect the LAN cable at both the remote end and the product end of the cable.
   b. Reconnect using the LAN cable. **Use a different LAN cable if possible.**
2. Try connecting to a different Ethernet socket in your network, router or switch.
3. If possible, try to reset the Ethernet switch or router. This may involve turning it off and on again.
4. Adjust the configuration settings.
   a. Print out the **original** product I/O settings: from the Touch Control Panel, press , then then select the **Internal Prints menu**, then **Service information prints** > **Print connectivity config**.
   b. Reset the I/O to factory defaults: from the Touch Control Panel, select the Connectivity menu, then **Advanced** > **Restore factory settings**.
   c. **Restart the product** and wait 5 minutes.
   d. Print out the **new** product I/O settings: from the Touch Control Panel, press , then then select the **Internal Prints menu**, then **Service information prints** > **Print connectivity config**.
   e. Connect to the product's Embedded Web Server using the URL shown in the main page of the Touch Control Panel.
   f. Compare the configuration information printed out before and after restoring to factory default settings. Set any custom I/O settings that may have been lost back to their desired values using the Configuration information printed.
   g. Run the Network Connectivity Test in the Diagnostic & Troubleshooting wizard: From the Touch Control Panel press , then go to **Connectivity** > **Diagnostics & troubleshooting** > **Web-connected printer wizard**> **Network connectivity Test**

Internet communication failures

If the printer has difficulty in connecting to the Internet, it will display an error message, which enables you to launch a diagnostic that will automatically detect possible issues in your networking and Internet access. You can also run the connectivity troubleshooting wizard from the Touch Control Panel or the EWS.

- From the Touch Control Panel: Press then go to **Connectivity** > **Diagnostics & troubleshooting** > **Web-connected printer wizard**
- From the EWS: Select **Support** > **Connectivity troubleshooting** > **Web-connected printer wizard**.
- From the Touch Control Panel go press , then go to **Internal prints** > **Service information prints** > **Print connectivity config**. the results are then printed out.

The web connected printer wizard can help you:

- To correctly configure the internet connection
- Configure the Automatic Firmware Update
- Troubleshoot Internet connection issues

You can choose to perform all the tests or individual tests. The following options are available:

- **All tests**
- **Network connectivity test:** check the printer's connection to the local area network
- **Internet connectivity test:** check the printer's connection to the Internet
- **Firmware update test:** check the printer's connection to HP's firmware update servers.

If any test fails, the printer describes the problem and recommends how to solve it.

USB device connectivity troubleshooting

If the product experiences problems with the USB connection (the computer does not detect the product when the USB cable is plugged in) or with USB performance (throughput is slow) then try the following checks.

- Check that the Connectivity is not disabled through the I/O Interfaces Utility, Enable I/O Interfaces Utility on page 161
- Check that the USB port in the computer is a “USB 2.0 High Speed” port. Some old computers and USB hubs have slower “USB 1.1 Full Speed” ports, and those should not be used with Designjet products. Do not ignore a warning message on your computer such as:

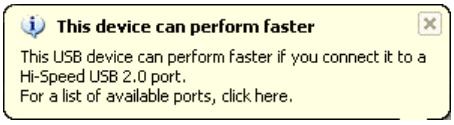

- Check the USB cable.

  - Check that the USB cable is **USB 2.0 Certified**: check the USB logo on the packaging of the cable, or on the cable itself, or check the specifications of the cable.
  - Try a shorter USB cable. Cables close to the 5 m limit often cause problems.
  - Make sure the USB cable doesn't pass near possible sources of electrical interference (CRT monitors, engines, etc.).
- Connect the product to a different USB port on the computer. If possible, try using a different computer.
- Remove any other USB devices from the computer, or connect them to different USB ports.

EIO Jetdirect card connectivity troubleshooting

Perform the following procedure, checking the connectivity carefully after each step to see whether the problem has been fixed.

1. Check that connectivity is not disabled, .
2. Change the LAN cable.
   a. Disconnect the LAN cable at both the remote end and the product end of the cable.
   b. Reconnect using the LAN cable. **Use a different LAN cable if possible.**
3. Try connecting to a different Ethernet socket in your network, router or switch.
4. If possible, try to reset the Ethernet switch or router. This may involve turning it off and on again.
5. Adjust the configuration settings.
   a. Print out the **original** Jetdirect I/O settings: from the Touch Control Panel, select the Internal Prints menu, then **Service information prints** > **Print connectivity config**.
   b. Print out the original Jetdirect protocol settings: from the Touch Control Panel, select the Connectivity menu, then **Jetdirect EIO** > **Modify configuration** > **Information** > **Print protocols** > **Yes**. Return to the main menu.
   c. Reset the Jetdirect I/O to factory defaults: from the Touch Control Panel, select the Connectivity menu, then **Jetdirect EIO** > **Restore factory settings**.
   d. **Restart the product** and wait 5 minutes.
   e. Print out the **new** Jetdirect I/O settings: from the Touch Control Panel, select the Internal Prints menu, then **Service information prints** > **Print connectivity config**.
   f. Print out the **new** Jetdirect protocol settings: from the Touch Control Panel, select the Connectivity menu, then **Jetdirect EIO** > **Modify configuration** > **Information** > **Print protocols** > **Yes**. Return to the main menu.
   g. Connect to the product's Embedded Web Server using the URL shown in the main page of the Touch Control Panel.
   h. Compare the configuration information printed out before and after restoring to factory default settings. Set any custom I/O settings that may have been lost back to their desired values using the Configuration information printed.

USB host features

A USB host port is available in the formatter to support new features that may become available in the future. As a security precaution, the USB port can be disabled through the EWS, Enable I/O Interfaces Utility on page 161

Accessories

There are two different accessories that can be connected into the USB Host port:.

- PostScript Upgrade Dongle, part number **CN500B**. This accessory is compatible with all HP Designjet T790, T795, T1300 and T2300 series.
- External Hard Disk Drive, part number **CN501A**. This accessory is compatible with all the HP Designjet T790, T1300 and T2300 series. When this accessory is connected the product will keep all user data stored in the external hard disk only, which can be removed from the product and stored separately for confidentiality or security reasons.

Copying the diagnostic package to a USB flash drive

The diagnostic package contains useful information from the product to help you to find the cause of a problem. The USB host port provides a quick and easy way to retrieve this information into a standard USB flash drive. See Appendix C: Obtaining the product log and the diagnostics package on page 119.

Firmware upgrade with USB flash drive

The USB host port can be used to upgrade the product's firmware of the product using a standard USB flash drive. In this case only a valid .FMW firmware package may be stored in the drive, and it must be in the root folder, not in a sub folder. Connect the USB flash drive and follow the instructions on the Touch Control Panel. The USB host port can be used at any time, regardless of what procedure the printer is performing.

Special firmware upgrades

Emergency firmware upgrade using a USB flash drive

When it is not possible to perform a firmware upgrade using the normal procedures (for instance, in case of a System Error and the Embedded Web Server is unavailable), it is possible to perform an emergency firmware upgrade using a USB flash drive. See Appendix B: Emergency firmware upgrade with USB flash drive on page 118.

Forced firmware upgrade

When the product is started for the first time, a wizard will start. The last step of the wizard asks the user to configure the automatic firmware update settings, and then and there the user is forced to check if there is a new version of the firmware available. In certain circumstances the printer may require a firmware upgrade before it can initialize completely. When this occurs there will be a USB flash drive in the shipping box with

In certain circumstances the printer may require a firmware upgrade before it can initialize completely. When this occurs there will be a USB flash drive in the shipping box with the product. Follow the instructions that come with the flash drive.

NOTE: The USB flash drive is provided only to upgrade the product's firmware. No other uses of the USB flash drive are supported.

If for any reason the USB flash drive upgrade option fails, download the firmware from the HP.com website instead. Load the firmware onto any empty flash drive and insert the flash drive into one of the USB ports of the

product. The product will recognize the firmware on the flash drive and display the install procedure on the Touch Control Panel.

2 System Error Codes

- Introduction
- Product logs
- What to do if the Touch Control Panel is blank
- Troubleshooting System Error 08:11 using the Formatter LEDs
- Continuable and Non-Continuable Error Codes
- System Error Code Brief Descriptions
- System Error Codes—Full Descriptions
- Appendix A: How to troubleshoot SE 79:04
- Appendix B: Emergency firmware upgrade with USB flash drive
- Appendix C: Obtaining the product log and the diagnostics package
- Appendix D: How to check the display list memory for an HP-GL/2 job

Introduction

Understand System Error Codes

System error codes are generally used to report internal system errors. The following pages contain a list of system error codes and their respective descriptions and recommended corrective actions. Try only one recommended action at a time, in the order that they appear, and check whether the error code has disappeared.

Reporting a system error to HP support

If you have an error code that you cannot resolve, then report the error to the HP Response Center or the nearest HP Support Office. When reporting the error, have the following information ready:

NOTE: If you fail to provide any of the following information, HP Support cannot help you properly. Make sure you take time to gather all of this information.

- Model and Serial Number of the product, this can be found in the Diagnostics menu, scroll to Unit Information.
- Which firmware revision the unit is using. this can be found in the Diagnostics menu, scroll to Unit Information.

- The complete error number, this information can be found in the Product/Printer Information Area.
- The Service Configuration Print. To print this press , then go to **'Internal Prints>Service Information Prints'**.
- The Current configuration sheet. To print this press , then go to**'Internal Prints>Service Information Prints'**.
- Which software application the customer is using.
- The internal error code, file, and line fields found on the Internal Error Screens available Press on the bottom right area of the touchscreen (same place where the cancel icon is usually displayed).

NOTE: The file and line fields are important to identify the source of the problem because the same internal Error Code can be reported in different files and line. In the File field, supply only the last part of the value (from last slash "/" to the end of the line). For example: for a file: /ae/..../elektra/hal/motors/ControlledMotor/Elektra/ControlledMotorElektra.cpp you'll only need to provide the "ControlledMotorElektra.cpp" part to HP support.

TIP: When investigating a system error, you are recommended to use the diagnostic package to further understand the problem. To obtain the diagnostic package (which takes a few minutes), see Appendix C: Obtaining the product log and the diagnostics package on page 119.

Product logs

It is possible to view all the activities the printer performs collected in a log file. To further understand a system error code, it is useful to have a log showing what the printer was doing at the time when the system error occurred.

To get product logs, see Appendix C: Obtaining the product log and the diagnostics package on page 119.

What to do if the Touch Control Panel is blank

The LEDs of the formatter (visible through the cover) and the power supply can help you troubleshoot a problem if the Touch Control Panel is blank.

The following image shows the Power Supply LED, looking through the cover.

The following image shows the Formatter LEDs, which should be marked I, II and III.

Follow these steps to troubleshoot the issue.

1. Switch the power off from the back of the product and disconnect the power cord. Reconnect the power cord and power on the product.
2. Check that the Touch Screen Panel interface cable is not damaged and is correctly connected between the Engine PCA and the Touch Control Panel.
3. Check that the connections between the Formatter and the Engine PCA are not damaged and are correctly connected.
4. Use the following table to interpret the LEDs and find the source of the problem. Remember that you should read these LEDs when you push the **Power** button.

   Some combinations may require the replacement of two or more components. In this case, always replace one component at a time. Test the product to see if the problem has disappeared (check the LEDs again). If the same LED sequence continues, replace the next component indicated in the table.

	Power supply LED	Formatter I LED	Formatter II LED	Formatter III LED	Touch Control Panel status	Part to change
1	Off	Off	Off	Off	Off	Power supply, see Power Supply Unit on page 454
2	On	Off	Off	Off	Off	Engine PCA, see EE Box on page 359.
3	On	On	Off	Off	n/a	Reseat the Formatter, if this does not solve the issue, replace the Formatter, see Formatter on page 370.
4	On	*Flashing*	Off	Off	n/a	1. Reseat the Formatter. 2. Hard Disk Drive, see Hard Disk Drive on page 378. 3. Formatter cannot unlock the hard disk due to a password issue. This will happen if you try to install an encrypted hard disk with a unique ATA password in a different printer than the one you installed it first. Remember to replace both formatter and hard disk in case of a Revision B printer.
5	On	On	*Flashing*	Off	n/a	1. Reseat the Formatter. 2. Hard Disk Drive, see Hard Disk Drive on page 378.
6	On	On	On	Off	n/a	1. Formatter, see Formatter on page 370. 2. Engine PCA, see EE Box on page 359.
7	On	On	On	*Flashing*	n/a	Engine PCA, see EE Box on page 359.
8	On	*Flashing*	On	On	Off	Check the cables, if they are ok replace the interconnect PCA, see Interconnect PCA on page 400.

	Power supply LED	Formatter I LED	Formatter II LED	Formatter III LED	Touch Control Panel status	Part to change
9	On	Off	On	on	Off	1. Check the USB cable of the Touch Control Panel, if the cable is ok, replace the Touch Control Panel, see Touch Control Panel on page 533. 2. Replace the Interconnect PCA, see Interconnect PCA on page 400.
10	On	Off	Off	*Flashing*	Off	1. Check the Power cable of the Touch Control Panel, if the cable is ok, replace the Touch Control Panel, see Touch Control Panel on page 533 2. Replace the Interconnect PCA, see Interconnect PCA on page 400.
11	On	Off	*Flashing*	*Flashing*	Off	1. Issue with the firmware, upgrade the product to the latest firmware, or reinstall the firmware. 2. Replace the Touch Control Panel, see Touch Control Panel on page 533
12	On	On	On	On	Touch Control Panel light on	All LEDs on for a few seconds is the normal part of the initialization of the product. If however the LEDs stay on, this would indicate a greater problem, communicated via a system error code on the Touch Control Panel.
13	On	On	On	On	Off	Replace the Touch Control Panel on page 533.

If the printer freezes while initializing, the following explanation can help you understand at which point of the initialization process it stopped and what could be the cause of the problem:

- **1%**: This is equivalent to a system error 08:11, perform the troubleshooting procedure for 08:11. If there is a communication failure between the Touch Control Panel and the Engine PCA, the following message will display “Time out initialization”. If the communication is lost for more than 24 seconds, the system error 08:04 might display. In this case, perform the troubleshooting procedure for 08:04.
- **2-20%**: Initializing Touch Control Panel. If the printer freezes between these two percentages, replace the Touch Control Panel see Touch Control Panel on page 533
- **20%**: Linux Operating system starts up. From this point on, other parts of the printer besides the Touch Control Panel could be causing the problem.
- **32%**: Communication between the Touch Control Panel and the printer is checked again. If the connection fails it might show system error 08:04 but it might be hidden and just freeze. NVM is also initialized at this point. If the printer freezes at this point, check the HDD, Encoder PCA and Touch Control Panel, and follow the troubleshooting for system error 08:04.
- **34%**: Initializing printer I/O. If the printer freezes at this point, try starting up without any external connections (USB/network). Usage counters are initialized. Replace HDD, see Hard Disk Drive on page 378 and Formatter see Formatter on page 370.
- **94%**: Initializing printer processes: mechanical movements, sensors, scan axis, web server. Start the printer without printheads, supplies and external connections. Parts to be replaced are multiple at this point, please check what the printer is doing just before it freezes to get more information about what could be failing.

Troubleshooting System Error 08:11 using the Formatter LEDs

Figure 1: Status of the Formatter LEDs:

IMPORTANT: Always try one part at a time (the Formatter or the Hard Disk Drive, depending on the LED pattern). Replacing two parts together may result in System Error 59.3:00, especially on PS models. In order to recover from System Error 59.3.XX, re-install the **original** parts again and replace them one by one, restarting the printer after every part replacement.

Formatter LED 1	Formatter LED 2	Formatter LED 3	Action for technician
On	Off	Off	1. Reseat the Formatter by loosening the Formatter screws, disconnecting and reconnecting the Formatter, and tightening the screws again. 2. Check the USB cable connections from the Engine PCA to the Interconnect PCA as well as the Front Panel USB and Data cables (Figures 2 and 3). 3. Replace the Formatter, see Formatter on page 370 4. Replace the HDD, see Hard Disk Drive on page 378. 5. Replace the Interconnect cables. 6. Replace the Engine PCA, see EE Box on page 359
Flashing	Off	Off	1. Reseat the printer's Formatter by loosening the Formatter screws, disconnecting and reconnecting the Formatter, and tightening the screws again. 2. Check the USB cable connections from the Engine PCA to the Interconnect PCA as well as the Front Panel USB and Data cables (Figures 2 and 3). 3. Replace the Hard Disk, see Hard Disk Drive on page 378. 4. Replace the Formatter, see Formatter on page 370 5. Replace the Interconnect PCA, see Interconnect PCA on page 400
On	Flashing	Off	
On	On	Off	1. Reseat the printer's Formatter by loosening the Formatter screws, disconnecting and reconnecting the Formatter, and tightening the screws again. 2. Check the USB cable connections from the Engine PCA to the Interconnect PCA as well as the Front Panel USB and Data cables (Figures 2 and 3). 3. Replace the Hard Disk, see Hard Disk Drive on page 378. 4. Replace the Formatter, see Formatter on page 370. 5. Replace the Touch Panel, see Touch Control Panel on page 533 6. Replace the Engine PCA, see EE Box on page 359.

On	On	Flashing	1. Reseat the Formatter by loosening the formatter screws, disconnecting and reconnecting the Formatter, and tightening the screws again. 2. Check the USB cable connections from the Engine PCA to the Interconnect PCA as well as the Front Panel USB and Data cables (Figures 2 and 3). 3. Replace the Engine PCA, see EE Box on page 359 4. Replace the Interconnect, see Interconnect PCA on page 400
On	On	On	1. Reseat the Formatter by loosening the formatter screws, disconnecting and reconnecting the Formatter, and tightening the screws again. 2. Check the USB cable connections from the Engine PCA to the Interconnect PCA as well as the Front Panel USB and Data cables (Figures 2 and 3). 3. Replace the Hard Disk Drive, see Hard Disk Drive on page 378 4. Replace the Interconnect PCA, see Interconnect PCA on page 400

NOTE: **For Revision B printers** the Formatter and Hard Disk are replaced as a single part,

Figure 2: Check the USB cable connections from the Engine PCA to the Interconnect PCA:

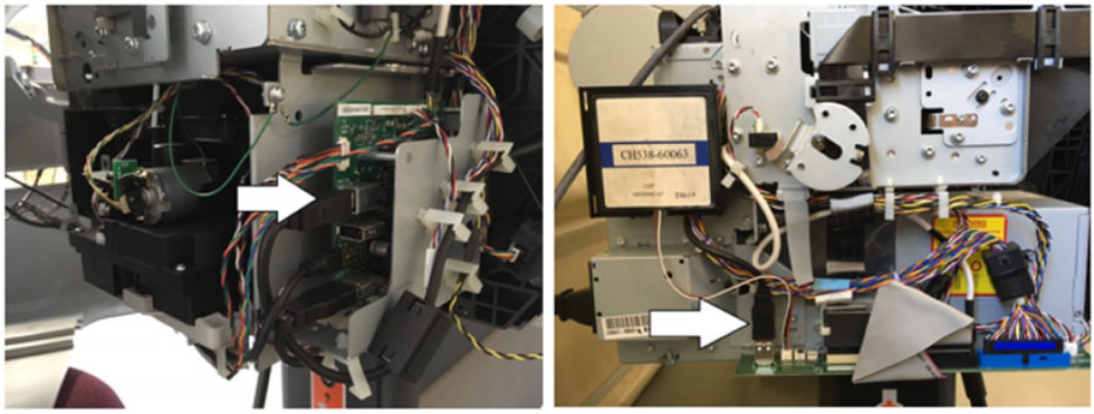

Figure 3: Check the connections of the Front Panel USB and Data cables:

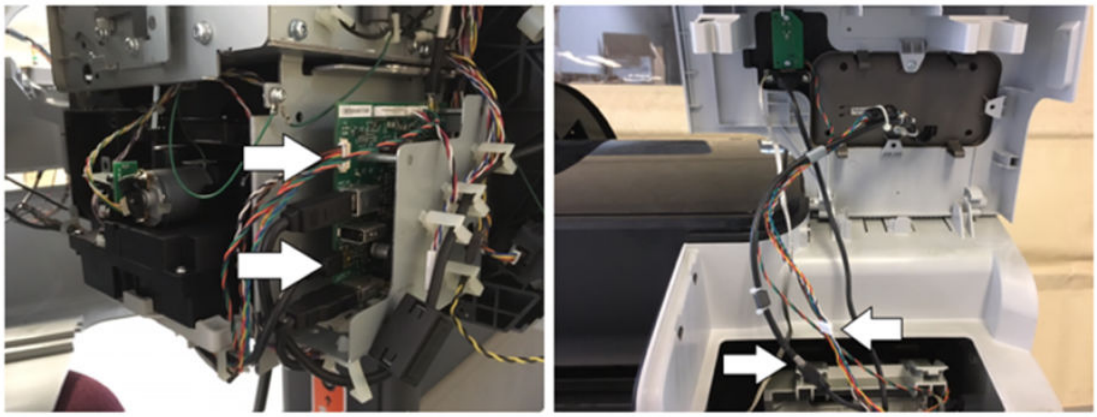

Continuable and Non-Continuable Error Codes

Some of the Error Codes are continuable, which means you can press OK on the Touch Screen Panel and continue working with the product. Non-Continuable Error Codes do not allow you to continue working with the product, in this case power the product OFF and ON again and see if the System Error disappears. If the Error Code reappears, then the product requires an on-site visit in order to resolve the problem.

System Error Code Brief Descriptions

Reading a System Error Code

System Error Codes explain which component/system is failing and what action should be taken to resolve the problem.

System Error Codes are displayed directly on the Touch Control Panel (but can also be seen on the Information Page) and have been defined in the format XX.YZ. or XX.n:YZ.m.

- XX: Subsystem or process (2 digits).
- n: Subsystem or process index (if more than one used in the product) – optional.

  – e.g. Identify the Ink Supply (color and number).
- Y: Who should perform the action (1 digit) – (0 for User or 1 for Service Engineer).
- Z: Action to perform (1 digit).

System Error Code Table

The following table explains the XX part of the System Error Code or Warning:

Code	Component/System
01.0	Engine PCA/Electronics module
02.1	Carriage PCA
03	Power supply
06	Formatter
08	Formatter/Touch Control Panel
09	Scanner (MFP only)
11	Trailing cable
21	Service station
22	Ink supply station
24	Tube assembly (IDS)
26.n	Ink Cartridge (color = n)
27	Printhead error
38	Output Tray
39	Roll switches
41	Paper-axis motor

Code	Component/System
42	Scan-axis motor
44	Aerosol fan
45	Rewinder
47	Star wheel motor
48	PPS mechanism
51	Top Cover Sensor
52	Drop detector
55	Line sensor
56	Drive roller analog encoder sensor
59	Electrical system
60	Initialization
61	Print queue
63	Input/output through LAN card
64	Input/output through USB port
65	Input/output (not known what port)
68	Loss of engine counters tracking
71	Memory management
72	Calibration
73	Servo
74	Firmware upgrade
74.1	Media Profile Update
75	Preventive Maintenance Kits
76	Disk Full
78	Media settings
79	Firmware
81	Media advance
84	Roll Feed
86	Paper path
87	Scan axis
93	Ink Pumping

Corrective Actions Table

The following table explains the YZ part of the System Error Code or Warning:

Code	Recovery Action	Response
00	Replace	Possible for customer to perform action
01	Reseat/Reconnect/Clean/Adjust (manually)	
02	Calibrate/Adjust (using Automatic Process)	
03	Power off and restart the product	
04	Upgrade System Firmware	
05	Upgrade Driver or Computer Software	
06	Add Accessory	
07	Escalate	
08	Send Plot Again	
09	Wrong Part Installed	
10	Replace	HP qualified personnel assistance required
11	Reseat/Reconnect/Clean/Adjust (manually)	
12	Calibrate/Adjust (using Automatic Process)	
13	Power off	
14	Upgrade System Firmware	
15	Upgrade Driver or Computer Software	
16	Add Accessory	
17	Escalate	
18	Send Plot Again	
19	Wrong Part Installed	

System Error Codes—Full Descriptions

This sections describes each of the system error codes and warnings that could be encountered while using the product and provides the repaperl action required to solve the problem detected.

NOTE: Replace one component at a time and check whether the error has gone before replacing another component. Using this procedure you will be able to determine exactly which component failed.

System Error:	01.0:YZ
Problem Description:	Communication with Engine PCA failed
Corrective action:	Try the following: 1. Switch the power off from the back of the product and disconnect the power cord. Reconnect the power cord and power on the product. 2. Remove the Formatter and reinsert it again. Ensure that it connects properly in the Engine PCA connector. – Replace the Engine PCA. See EE Box on page 359. – Replace the Formatter. See Formatter on page 370. NOTE: For Revision B printers the Formatter and Hard Disk are replaced as a single part,

System Error:	01.1:YZ
Problem Description:	Error in the Engine PCA
Corrective action:	Try the following: 1. Switch the power off from the back of the product and disconnect the power cord. Reconnect the power cord and power on the product. 2. Replace the Engine PCA. See EE Box on page 359. 3. Replace the Formatter. See Formatter on page 370. NOTE: For Revision B printers the Formatter and Hard Disk are replaced as a single part,

System Error:	01.2:YZ

Problem Description: Failure communicating with an Ink Supply

Corrective action: Try the following:

1. Switch the power off from the back of the product and disconnect the power cord. Reconnect the power cord and power on the product.
2. Perform the Ink Delivery System diagnostic test. See Ink Delivery System (IDS) Test on page 149.

   – If the test finds that the ink supply is defective, replace it.

   – If the test does not find any errors, remove all the ink supplies from the ISS and reboot the product.
3. Install the ink cartridges with the product booted in normal mode. Use the replacement option available from the Touch Control Panel and install the cartridges one by one. If an error appears after installing a supply, the last supply you installed is defective. Replace it.
4. Check that the cables between the Left Ink Supply Station and the Engine PCA are not damaged and are correctly connected. In case of any damage replace the cables; see Connecting the Data Harness and ISS Harness Cable on page 292
5. Replace the Left Ink Supply Station. See Left Ink Supply Station on page 384.
6. Replace the Engine PCA. See EE Box on page 359.

System Error: 02.1:YZ

Problem Description: Problem with the Carriage PCA

Corrective action: Try the following:

1. Switch the power off from the back of the product and disconnect the power cord. Reconnect the power cord and power on the product.
2. Check that the Trailing Cable is not damaged. Check that the Trailing Cable is correctly connected between the Engine PCA and Carriage PCA.
3. Replace the Carriage PCA. See Carriage PCA on page 323.
4. Replace the Trailing Cable and Carriage PCA Covers.
5. Replace the Engine PCA. See EE Box on page 359.

System Error: 03:YZ

Problem Description: Problem with Power Supply Unit

Corrective action: Try the following:

1. Switch the power off from the back of the product and disconnect the power cord. Reconnect the power cord and power on the product.
2. Replace the Power Supply Unit (PSU). See Power Supply Unit on page 454

System Error: 03.0:10

Problem Description: Battery of Real Time Clock ran down

Corrective action: Replace the battery. See Real-time Clock Battery on page 456.

System Error:	06:YZ
Problem Description:	Failure reading/writing NVM in Hard disk
Corrective action:	Try the following: 1. Switch the power off from the back of the product and disconnect the power cord. Reconnect the power cord and power on the product. 2. Replace the Hard Disk. See Hard Disk Drive on page 378. NOTE: For Revision B printers the Formatter and Hard Disk are replaced as a single part,

System Error:	07:10
Problem Description:	Interconnect Board or Power cable has failed
Corrective action:	Try the following: 1. Check the condition and connections of the Power Cable, replace if necessary. 2. Replace the Interconnect Board, , see Interconnect PCA on page 400.

System Error:	07.01:11
Problem Description:	DelSol3 ASIC not found or not responding
Corrective action:	Try the following: ▲ Check the condition and connections of the Interconnect data and power cable, replace if necessary, , see Interconnect PCA on page 400.

System Error:	07.02:11
Problem Description:	USB Cable not connected
Corrective action:	Try the following: ▲ Check the condition and connections of the USB cable, replace if necessary.

System Error:	07.03:10

Problem Description: USB Hub not found

Corrective action: Try the following:

1. Make sure Interconnect board connector labeled 'INPUT HUB' is properly connected.
2. Make sure Wukong board connector labeled JUSB2 is properly connected to the cable coming from Interconnect board.
3. If failure continues, troubleshoot the error by changing the USB cable from Engine PCA to Interconnect, if the error follows to the changed part the USB cable is faulty, if it does not, the part is faulty.
4. Replace the Interconnect PCA, see Interconnect PCA on page 400.
5. Replace the Formatter Board see Formatter on page 370

   NOTE: For Revision B printers the Formatter and Hard Disk are replaced as a single part,
6. Replace the Engine PCA see EE Box on page 359

System Error: 07.03:11

Problem Description: USB Scanner connected to incorrect port

Corrective action: Ensure that the USB cable from the Scanner to the Interconnect board is connected at the connection labeled 'SCANNER' and not 'HOST CON'

System Error: 08:04

Problem Description: Communication with the Touch Control Panel is lost during normal printer operation or initialization.

Corrective action: Try the following:

1. Ask the customer to power off the printer, wait one minute and power it back on.
2. Reseat printer's formatter (do this by loosening the Formatter screws, disconnecting and reconnecting the Formatter, and tightening the screws again).
3. Check with the customer if another error appears on the Touch Panel before 08:04 (for example, 21: YZ or 22: YZ). In that case, follow the respective troubleshooting of that specific error before continuing with these troubleshooting steps.

   Check the event log in the EWS support pages, if accessible, to see if there is another SE (for instance, 07:10), and in that case, follow that SE's troubleshooting process first as well.

   For your reference, see Appendix C: Obtaining the product log and the diagnostics package on page 119.
4. Perform an Emergency FW Upgrade using a USB flash drive, see Appendix B: Emergency firmware upgrade with USB flash drive on page 118.
5. Remove the Ink cartridges, the LAN Cable, any media that is loaded, and the printheads if possible.
6. If the printer comes to Ready, Empty the Job queue.
7. Perform an EEROM reset from Diagnostic Mode if possible.
8. Check the USB cable connections from the Engine PCA to the Interconnect PCAs.

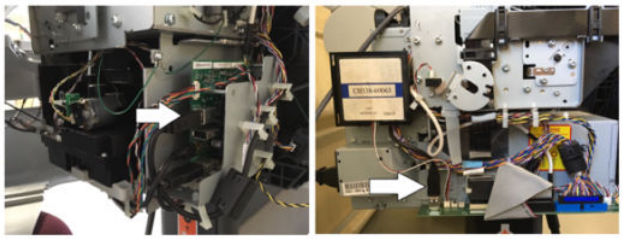

9. Check the connections of the Front Panel USB and Data cables.

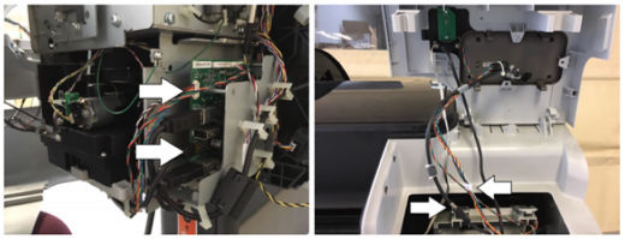

10. Replace the cable running from the Engine PCA to the Interconnect PCA and from the FP to the Interconnect PCA. It is included in the Interconnect Cable Kit.
11. Replace the Formatter Board see Formatter on page 370

    NOTE:

    – For Revision A printers, never replace the Formatter and the Hard Disk at the same time. Once the HDD is installed in one printer and it boots up, it cannot be used in another printer.

    – For Revision B printers the Formatter and Hard Disk are replaced as a single part,
12. Replace the HDD, see Hard Disk Drive on page 378

NOTE:

- For Revision A printers, never replace the Formatter and the Hard Disk at the same time.
- For Revision B printers the Formatter and Hard Disk are replaced as a single part,

13. Replace the Interconnect PCA, see Interconnect PCA on page 400.
14. Replace the Touch Control Panel, see Touch Control Panel on page 533
15. Replace the Engine PCA; see EE Box on page 359.
16. Get the Extended Diagnostics Package and escalate the case for more help. SeeAppendix C: Obtaining the product log and the diagnostics package on page 119 for your reference.

System Error: 08:08

Problem Description: A feature on the Touch Control Panel hangs or will not function (copy,scan etc)

Corrective action: Try the following:

1. Turn off the product and turn on again, and check to see if the error remains.
2. Upgrade the firmware For more information, see Appendix B: Emergency firmware upgrade with USB flash drive on page 118
3. Escalate the issue.

System Error: 08:11

Problem Description: Communication lost between the Touch Panel and the printer.

Corrective action: Try the following:

1. Ask the customer to power off the printer, wait one minute and power it back on.
2. Reseat the printer's formatter (do this by loosening the Formatter screws, disconnecting and reconnecting the Formatter, and tightening the screws again).
3. Upgrade the firmware (but, if booting up process is frozen at 1% please skip this step); see Appendix B: Emergency firmware upgrade with USB flash drive on page 118.
4. Check the Formatter LEDs and perform the appropriate troubleshooting. See Troubleshooting System Error 08:11 using the Formatter LEDs on page 73.
5. Get the Extended Diagnostics Package and escalate the case for more help. SeeAppendix C: Obtaining the product log and the diagnostics package on page 119 for your reference.

System Error: 08:01:11

Problem Description: Touch Control Panel USB Cable fails

Corrective action: Try the following:

1. Check the condition and connections of the Touch Control Panel USB cable, replace if necessary.
2. If the error continues, replace the Touch Control Panel Touch Control Panel on page 533

System Error: 09:01

Problem Description: Media jam in Scanner

Corrective action: Try the following:

1. Turn off the product using the Power key at the front, then also turn off the power switch at the rear and disconnect the power cable.
2. There is a small lever at the rear left of the scanner. Slide the lever to the right and open the scanner cover.
3. Solve the media jam.
4. Check and clean the pressure rollers.
5. Close the scanner cover and gently push it down to lock it into place.
6. Reconnect the product's power cable; turn on the power switch at the rear, and turn on the product using the Power key. If no paper is seen:
   a. Open the scanner cover. Underneath you should see red flashing lights, then green, then blue.
   b. In the center of the scanner cover, between the flashing lights, you will find 4 small sensors labeled as R, G, B and L. Put your fingers over the R, G and B sensors simultaneously and the scanner motor should advance.
   c. If there is no response from the scanner motor, replace the Engine PCA, see EE Box on page 359 or Stepper motor see Scanner Motor Assembly (MFP only) on page 530.

System Error: 09:02

Problem Description: Scanner not calibrated

Corrective action: Calibrate the Scanner Calibrate the Scanner on page 224

System Error: 09:03

Problem Description: File I/O Error

Corrective action:

1. Reboot Product.
2. Upgrade the firmware with the latest firmware, for more information, see Appendix B: Emergency firmware upgrade with USB flash drive on page 118
3. Go to **Jobs** > **Options** > **Delete all queue scan jobs**
4. Make sure the hard disk that is installed in the printer is the correct one for the product you are repairing.
5. Check and clean scanner elements.
6. Calibrate the Scanner Calibrate the Scanner on page 224
7. In some corner cases, the issue could be related to media movement. Replace Media Sensors Scanner Exit Media Sensors (MFP only) on page 525.

System Error: 09:04

Problem Description: Contex Library failed to load

Corrective action:

1. Reboot the Product
2. Upgrade the firmware For more information, see Appendix B: Emergency firmware upgrade with USB flash drive on page 118

System Error: 09.01:10

Problem Description: Scanner Motor is failing

Corrective action: Try the following:

1. Reboot the printer.
2. If system error persists, upgrade with the last firmware version. Appendix B: Emergency firmware upgrade with USB flash drive, see Appendix B: Emergency firmware upgrade with USB flash drive on page 118.
3. Open the scanner cover. Underneath you will see red flashing lights, then green, then blue.
4. In the center of the scanner cover, between the flashing lights, you will find 4 small sensors labeled as R, G, B and L. Put your fingers over the R, G and B sensors simultaneously and the scanner motor should advance.
5. If there is no response from the scanner motor, replace the Engine PCA, see EE Box on page 359 or Stepper motor see Scanner Motor Assembly (MFP only) on page 530.
6. Replace the Scanner Controller Board, see Scanner Controller Board (MFP only) on page 528.
7. Check the Scanner Controller board cable connections and replace the cables if required.
8. Replace Media Sensors, see Scanner Exit Media Sensors (MFP only) on page 525

System Error: 09.02:10

Problem Description: CIS A Element is failing

Corrective action:

1. Replace CIS A Element CIS Element (MFP only) on page 524
2. Clean the scanner of dust and dirt and perform the Scanner Calibration Calibrate the Scanner on page 224
3. If the system error persists, upgrade with last firmware version. For more Information about see Appendix B: Emergency firmware upgrade with USB flash drive on page 118
4. Replace Scanner Controller Board (SCU), see Scanner Controller Board (MFP only) on page 528

System Error: 09.03:10

Problem Description: CIS B Element is failing

Corrective action:

1. Replace CIS B Element CIS Element (MFP only) on page 524
2. Clean the scanner of dust and dirt and perform the Scanner Calibration Calibrate the Scanner on page 224
3. If the system error persists, upgrade with last firmware version. For more Information about see Appendix B: Emergency firmware upgrade with USB flash drive on page 118
4. Replace Scanner Controller Board (SCU), see Scanner Controller Board (MFP only) on page 528

System Error: 09.04:10

Problem Description: CIS C Element is failing

Corrective action:

1. Replace CIS C Element CIS Element (MFP only) on page 524
2. Clean the scanner of dust and dirt and perform the Scanner Calibration Calibrate the Scanner on page 224
3. If the system error persists, upgrade with last firmware version. For more Information about see Appendix B: Emergency firmware upgrade with USB flash drive on page 118
4. Replace Scanner Controller Board (SCU), see Scanner Controller Board (MFP only) on page 528

System Error: 09.05:10

Problem Description: CIS D Element is failing

Corrective action:

1. Replace CIS D Element CIS Element (MFP only) on page 524
2. Clean the scanner of dust and dirt and perform the Scanner Calibration Calibrate the Scanner on page 224
3. If the system error persists, upgrade with last firmware version. For more Information about see Appendix B: Emergency firmware upgrade with USB flash drive on page 118
4. Replace Scanner Controller Board (SCU), see Scanner Controller Board (MFP only) on page 528

System Error: 09.06:10

Problem Description: CIS E Element is failing

Corrective action:

1. Replace CIS E Element CIS Element (MFP only) on page 524
2. Clean the scanner of dust and dirt and perform the Scanner Calibration Calibrate the Scanner on page 224
3. If the system error persists, upgrade with last firmware version. For more Information about see Appendix B: Emergency firmware upgrade with USB flash drive on page 118
4. Replace Scanner Controller Board (SCU), see Scanner Controller Board (MFP only) on page 528

System Error: 09.08:11

Problem Description: Power cable of the Scanner is failing

Corrective action: Check the condition and connections of the Scanner Power cable, if necessary replace the cable.

System Error: 09.09:11

Problem Description: USB cable of the Scanner is failing

Corrective action: Check the condition and connections of the Scanner USB cable, if necessary replace the cable.

System Error: 09.10:04

Problem Description: Scanner is in SAFE MODE

Corrective action: Restart the product, if the problem persists replace the SCU. See Scanner Controller Board (MFP only) on page 528.

System Error: 09.10:10

Problem Description: Scanner Controller Board (SCU) is failing

Corrective action:

1. Turn off the product (20 sec.) using the Power key at the front, then also turn off the power switch at the rear and disconnect the power cable.
2. Perform the Scanner Calibration Calibrate the Scanner on page 224
3. If the system error persists, upgrade with last firmware version. For more Information about see Appendix B: Emergency firmware upgrade with USB flash drive on page 118
4. Perform File System Check; see File System Check on page 167
5. Perform the Scanner Validation; see Scanner Validation on page 193
6. Replace the Scanner SCU, see Scanner Controller Board (MFP only) on page 528.
7. Check the Scanner USB cable connection and the Power/Reset/Awake cable from the Scanner Controller Board to the Interconnect PCA and replaced if broken
8. Replace Interconnect PCA; see Interconnect PCA on page 400

System Error: 11:YZ

Problem Description: Trailing Cable does not seem to be detected

Corrective action: Try the following:

1. Switch the power off from the back of the product and disconnect the power cord. Reconnect the power cord and power on the product.
2. Check that the Trailing Cable is not damaged; replace it if necessary. Check that the Trailing Cable is correctly connected between the Engine PCA and Carriage PCA.
3. Replace the Carriage PCA. See Carriage PCA on page 323.
4. Replace the Engine PCA. See EE Box on page 359.

System Error: 21:YZ

Problem Description: Failure moving Service Station

Corrective action: Try the following:

1. Switch the power off from the back of the product and disconnect the power cord. Check the Primer Tubes. Reconnect the power cord and power on the product.
2. Make sure that the Service Station path is clear. Remove any visible obstacles (screws, plastic parts, etc.) restricting the movement of the Service Station.
3. If the carriage has stopped over the service station, on the right side of the product, check that the cutter is not activated. The cutter may be blocking the carriage over the service station, preventing the service station from performing the movement correctly. The cutter is on the left side of the carriage.
4. Perform the Service Station diagnostic test to troubleshoot the problem further. See Service Station Test on page 156.
5. Replace the Service Station. See Service Station on page 495.

System Error: 21.1:YZ

Problem Description: Failure moving the Primer Motor of the Service Station

Corrective action: Try the following:

1. Remove the Right Cover and make sure the cables from the Engine PCA to the Service Station are connected and are not damaged. In case of any damage replace the affected cable; see Engine Cables Kit on page 283
2. Perform the Primer Motor diagnostic test (listed under the service station diagnostic test) to troubleshoot the problem further. See Primer motor on page 158.
3. Replace the Service Station. See Service Station on page 495.

System Error: 21.2:YZ

Problem Description: Failure testing the length of the Service Station path

Corrective action: Try the following:

1. Switch the power off from the back of the product and disconnect the power cord. Check the Primer Tubes. Reconnect the power cord and power on the product.
2. Make sure that the Service Station path is clear. Remove any visible obstacles (screws, plastic parts, etc.) restricting the movement of the Service Station.
3. If the carriage has stopped over the service station, on the right side of the product, check that the cutter is not activated. It may happen that the cutter is blocking the carriage over the service station, preventing the service station from performing the movement correctly. The cutter is on the left side of the carriage.
4. Perform the Service Station diagnostic test to troubleshoot the problem further. See Service Station Test on page 156.
5. Replace the Service Station. See Service Station on page 495.

System Error: 22.0:YZ

Problem Description: Left Ink Supply Station error, module 0.

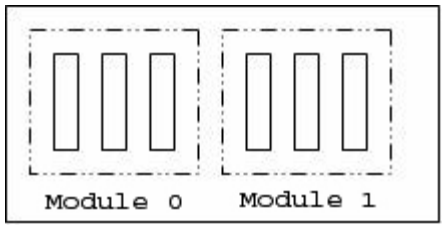

Corrective action: Try the following:

1. Switch the power off from the back of the product and disconnect the power cord. Reconnect the power cord and power on the product.
2. Check that the cables between the Ink Supply Station and the Engine PCA are not damaged and are properly connected. In case of any damage replace the cable.
3. Perform the Ink Delivery System diagnostic test to troubleshoot the problem further. See Ink Delivery System (IDS) Test on page 149.
4. Replace the Left Ink Supply Station. See Left Ink Supply Station on page 384.
5. Replace the Engine PCA. See EE Box on page 359.

System Error: 22.1:YZ

Problem Description: Left Ink Supply Station error, module 1

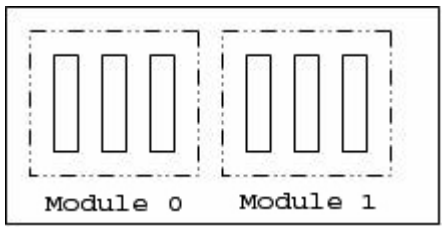

Corrective action: Try the following:

1. Switch the power off from the back of the product and disconnect the power cord. Reconnect the power cord and power on the product.
2. Check that the cables between the Ink Supply Station and the Engine PCA are not damaged and are properly connected. In case of any damage replace the cable.

   NOTE: Check the Data Harness and ISS Harness Cable are connected in the right position onto the Engine PCA. These two connectors can be swapped by mistake causing a SE 22.1:10. Check the instructions in Connecting the Data Harness and ISS Harness Cable on page 292
3. Perform the Ink Delivery System diagnostic test to troubleshoot the problem further. See Ink Delivery System (IDS) Test on page 149.
4. Replace the Left Ink Supply Station. See Left Ink Supply Station on page 384.
5. Replace the Engine PCA. See Starwheel Assembly on page 504.

System Error: 24:YZ

Problem Description: Ink Setup failure

Corrective action: Try the following:

1. Switch the power off from the back of the product and disconnect the power cord. Insert the new purgers, reconnect the power cord and power on the product.
2. Perform the Ink Delivery System diagnostic test in order to check that the bongos (pushers) go up and down to pressurize ink in the tubes and the Out of Ink sensors work properly. See Ink Delivery System (IDS) Test on page 149.
3. Try purging the Ink Supply Tubes again once the product has been restarted.
4. If the diagnostic test does not find any problem, install new cartridges in the product and try purging the Ink Supply Tubes again. It could be that one of the cartridges is defective.
5. If the problem persists, replace the Ink Supply Tubes. You must bring purgers and ink cartridges. See Ink Supply Tubes & Trailing Cable on page 389.

Warning: 26:01

Problem Description: Ink supply error found during IDS diagnostic test. In the Touch Control Panel message you will see letters representing the names of the colors of the faulty supplies.

Corrective action: Try the following:

1. Reseat the faulty ink supply and repeat the Ink Delivery System diagnostic test.
2. If the problem persists, replace the faulty ink supply and repeat the Ink Delivery System diagnostic test.
3. If the problem persists, replace the Left Ink Supply Station. See Left Ink Supply Station on page 384.

Warning: 39.1:01

Problem Description: Roll 1 switch failed (standby or resume). Roll 1 has been unloaded.

Corrective action: There is no corrective action. This system warning code only notifies the user that the roll has been unloaded because an unexpected error occurred with Roll 1 in standby or resume operation.

Warning: 39.2:01

Problem Description: Roll 2 switch failed (standby or resume). Roll 2 has been unloaded.

Corrective action: There is no corrective action. This system warning code only notifies the user that the roll has been unloaded because an unexpected error occurred with Roll 2 in standby or resume operation.

System Error: 41:YZ

Problem Description: Electrical fault or current limit in Media-Axis Motor

Corrective action: Try the following:

1. Switch the power off from the back of the product and disconnect the power cord. Reconnect the power cord and power on the product.
2. Check for any visible obstacles restricting the movement of the Media Advance Roller. If there is a wrinkled mass of paper inside the paper path, lift the Pinch wheels (using Media Lever) and clear the obstruction.
3. Perform the Paper Drive diagnostic test to troubleshoot the problem furthe. See Paper Drive Test on page 137.
4. Perform the Rewinder diagnostic test to troubleshoot the problem further. See Rewinder Test on page 147.
5. Check that the Media Advance Drive cable is not damaged and is correctly connected to the Engine PCA.
6. Replace the Media Advance Drive. See Media Advance Drive on page 419.
7. Replace the Engine PCA. See EE Box on page 359.

System Error: 42:YZ

Problem Description: Electrical problem (fault, current limit, overheating) in Scan-Axis Motor

Corrective action: Try the following:

1. Switch the power off from the back of the product and disconnect the power cord. Reconnect the power cord and power on the product.
2. Check for any visible obstacles restricting the movement of the Carriage Assembly. Remove any obstacle to let the carriage move freely along the whole scan axis. If there is a wrinkled mass of paper inside the paper path, raise the pinch wheels (using the Media Lever) and clear the obstruction.
3. Check that the Scan-Axis Motor cable is not damaged and is correctly connected to the Engine PCA.
4. Replace the Scan-Axis Motor. See Scan-axis Motor on page 491.
5. Replace the Engine PCA. See EE Box on page 359.

System Error: 44:YZ

Problem Description: Aerosol fan fault

Corrective action: Try the following:

1. Switch the power off from the back of the product and disconnect the power cord. Reconnect the power cord and power on the product.
2. Check that the Aerosol Fan cable is not damaged and is correctly connected to the Engine PCA w/PSU SV.
3. Replace the Aerosol Fan Assembly. See Aerosol Fan Assembly on page 357
4. If the System Error continues, replace the Engine PCA. See EE Box on page 359.

System Error: 45.1:YZ

Problem Description: An error with the Rewinder 1 System (Upper Rewinder) has been detected.

Corrective action: Try the following:

1. Switch the power off from the back of the product and disconnect the power cord. Remove the paper from Roll 1. Reconnect the power cord and power on the product.
2. Check that the Rewinder 1 cable is not damaged and is correctly connected to the Engine PCA.
3. Check that the Upper Right Roll Support is correctly attached to and aligned with the Right Cover.
4. Perform the Rewinder diagnostic test to troubleshoot the problem further. See Rewinder Test on page 147.
5. Replace the Upper Right Roll Support. See Roll Support, Upper Right on page 489.

System Error: 45.2:YZ

Problem Description: An error with the Rewinder 2 System (Lower Rewinder) has been detected .

Corrective action: Try the following:

1. Switch the power off from the back of the product and disconnect the power cord. Remove the paper from Roll 2. Reconnect the power cord and power on the product.
2. Check that the Rewinder 2 cable is not damaged and is correctly connected to the Engine PCA.
3. Check that the Lower Right Roll Support is correctly attached to and aligned with the Right Cover.
4. Perform the Rewinder diagnostic test to troubleshoot the problem further. See Rewinder Test on page 147.
5. Replace the Lower Right Roll Support. See Roll Support, Lower Right on page 483.

System Error: 47:YZ

Problem Description: Starwheels motor error

Corrective action: Try the following:

1. Switch the power off from the back of the product and disconnect the power cord. Reconnect the power cord and power on the product.
2. Check for any visible obstacles restricting the movement of the Starwheel Assembly, then clear the obstruction.
3. Check that the Starwheel Assembly cable is not damaged and is correctly connected to the Engine PCA.
4. Perform the Scan Axis Starwheel diagnostic test to troubleshoot the problem further.
5. Replace the Starwheel Motor. See Starwheel Motor on page 511.
6. Replace the Engine PCA. See EE Box on page 359.

System Error: 48:YZ

Problem Description: PPS system failure

Corrective action: Try the following:

1. Switch the power off from the back of the product and disconnect the power cord. Reconnect the power cord and power on the product.
2. Check that the Pen to Paper Space (PPS) Solenoid cable is not damaged and is correctly connected to the Engine PCA.
3. Perform the Scan Axis PRS diagnostic test to troubleshoot the problem further.
4. Replace the Pen to Paper Space (PPS) Solenoid. See Pen to Paper Space (PPS) Solenoid on page 437.
5. Replace the Engine PCA. See EE Box on page 359.

System Error: 51:YZ

Problem Description: Scanner Position Sensor failure

Corrective action: Try the following:

1. Check that the Scanner Position Sensor cable is not damaged and is correctly connected to the Engine PCA.
2. Perform the Sensors Test to troubleshoot the problem further. See Sensors Test on page 144.
3. Replace the Scanner Position Sensor. See Scanner Position Sensor (MFP only) on page 516.

System Error: 52:10

Problem Description: The product has detected a failure in the Drop Detector.

Corrective action: Try the following:

1. Switch the power off from the back of the product and disconnect the power cord. Reconnect the power cord and power on the product.
2. Check that the Drop Detector cable is not damaged and is correctly connected to the Engine PCA.
3. Replace the Drop Detector. See Drop Detector on page 355.
4. Replace the Engine PCA. See EE Box on page 359.

System Error: 55:YZ

Problem Description: Problem with the Line Sensor. The product has detected a failure to access the Line Sensor EEPROM.

Corrective action: Try the following:

1. Switch the power off from the back of the product and disconnect the power cord. Reconnect the power cord and power on the product.
2. Perform the Carriage Test to troubleshoot the problem further. See Carriage Assembly Test on page 141.
3. Check the Line Sensor connections to the Carriage PCA.
4. Replace the Line Sensor. See Line Sensor on page 413.
5. Replace the Carriage PCA. See Carriage PCA on page 323.

System Error: 56:YZ

Problem Description: Drive roller analog encoder homing (also known as “zero search”) failed.

Corrective action: Try the following:

1. Switch the power off from the back of the product and disconnect the power cord. Reconnect the power cord and power on the product.
2. Perform the Media Path Test to troubleshoot the problem further. See Paper Drive Test on page 137.
3. Replace the Encoder Disk and Encoder Sensor. See Encoder Disk and Encoder Sensor on page 364.
4. Replace the Engine PCA. See EE Box on page 359.

System Error: 59.1:09

Problem Description: Two electrical parts have been replaced at the same time.

Corrective action: Replace one part at a time, and restart the product before replacing another.

System Error: 59.2:00

Problem Description: An unsupported or reused part has been installed.

Corrective action: Install only new parts recommended by HP for this product.

System Error: 59.3:10

Problem Description: Wrong information stored on CryptoAsic

Corrective action: **Call agent**: Switch the power off from the back of the product, wait two minutes, then switch it back on again.

Service engineer: Escalate the case to Level 3 requesting new CryptoAsic licenses. Update the CryptoAsic with the delivered licenses.

System Error: 59.4:10

Problem Description: CryptoAsic failure

Corrective action: **Call agent**: Switch the power off from the back of the product, wait two minutes, then switch it back on again.

Service engineer:

1. Reseat the CryptoAsic PCA.
2. Order a CryptoAsic PCA Service Kit and escalate to Level 3 providing printer Serial Number, Product Number, and the serial number of the CryptoAsic PCA Service Kit.
3. Replace the CryptoAsic PCA. Write the file provided by Level 3 to an empty USB, plug the USB in the printer and reboot. If booting fails, enable diagnostic package with the USB and provide the logs to Level 3.
4. Replace the Engine PCA. See EE Box on page 359.

System Error: **59.5:19**

Problem Description: CryptoAsic type missmatch

Corrective action: **Call agent**: Switch the power off from the back of the product, wait two minutes, then switch it back on again.

Service engineer:

1. Reseat the CryptoAsic PCA.
2. Order a CryptoAsic PCA Service Kit and escalate to Level 3 providing printer Serial Number, Product Number, and the serial number of the CryptoAsic PCA Service Kit.
3. Replace the CryptoAsic PCA. Write the file provided by Level 3 to an empty USB, plug the USB in the printer and reboot. If booting fails, enable diagnostic package with the USB and provide the logs to Level 3.
4. Replace the Engine PCA. See EE Box on page 359.

System Error: **59.6:19**

Problem Description: Printer serial number mismatch

Corrective action: **Call agent**: Switch the power off from the back of the product, wait two minutes, then switch it back on again.

Service engineer:

1. Reseat the CryptoAsic PCA.
2. Order a CryptoAsic PCA Service Kit and escalate to Level 3 providing printer Serial Number, Product Number, and the serial number of the CryptoAsic PCA Service Kit.
3. Replace the CryptoAsic PCA. Write the file provided by Level 3 to an empty USB, plug the USB in the printer and reboot. If booting fails, enable diagnostic package with the USB and provide the logs to Level 3.
4. Replace the Engine PCA. See EE Box on page 359.

System Error: **59.7:194**

Problem Description: CryptoAsic generic error

Corrective action: **Call agent**: Switch the power off from the back of the product, wait two minutes, then switch it back on again.

Service engineer:

1. Reseat the CryptoAsic PCA.
2. Order a CryptoAsic PCA Service Kit and escalate to Level 3 providing printer Serial Number, Product Number, and the serial number of the CryptoAsic PCA Service Kit.
3. Replace the CryptoAsic PCA. Write the file provided by Level 3 to an empty USB, plug the USB in the printer and reboot. If booting fails, enable diagnostic package with the USB and provide the logs to Level 3.

System Error: 60.1:YZ, 60.2:YZ

Problem Description: Initialization error

Corrective action: Try the following:

1. Switch the power off from the back of the product, wait two minutes, then switch it back on again.
2. Check the power cord; try connecting it to another power socket.
3. Check that the product is properly connected in all other respects.
4. Switch the power off from the back of the product; remove the Formatter; reinsert the Formatter; switch the power on again.
5. If the error persists, get the product log (see Appendix C: Obtaining the product log and the diagnostics package on page 119) and contact HP with the file.

System Error: 61:YZ

Problem Description: The file format is incorrect or not supported for the current product configuration and the product cannot process the job.

Corrective action: Try the following:

1. Check if the product supports the file format (formats such as PS, PDF, TIFF and JPEG are supported by PostScript products only).
2. Switch the power off from the back of the product and disconnect the power cord. Reconnect the power cord and power on the product.
3. Check the graphic language setting of the product (refer to the *User's Guide*).
4. Resend the file to the product.
5. Check that the product has the latest firmware version. If not, update the firmware to the latest version.

System Error: 61:04.1

Problem Description: The PostScript fonts seem to be missing.

Corrective action: Perform a firmware upgrade to re-install the fonts.

System Error: 61:08.1

Problem Description: The file cannot be printed because it is password-protected.

Corrective action: Resend the file without password protection.

System Error: 63:01

Problem Description: Cannot retrieve IP addess

Corrective action: Try the following:

1. Connect to another network.
2. Modify the IPv4 configuration.

System Error: 63:YZ

Problem Description: Input/Output problem through the network interface of the Formatter

Corrective action: Try the following:

1. Switch the power off from the back of the product and disconnect the power cord. Reconnect the power cord and power on the product.
2. Check that the Network cable is correctly connected to the Formatter.
3. Check that the product has the latest firmware version. If not, update the firmware to the latest version.
4. Replace the Formatter. See Formatter on page 370.

   NOTE: For Revision B printers the Formatter and Hard Disk are replaced as a single part,

System Error: 64:YZ

Problem Description: Input/Output problem through the USB Port

Corrective action: Try the following:

1. Switch the power off from the back of the product and disconnect the power cord. Reconnect the power cord and power on the product.
2. Check that the USB cable is correctly connected to the product.
3. Check that the product has the latest firmware version. If not, update the firmware to the latest version.
4. Replace the Formatter. See Formatter on page 370.

   NOTE: For Revision B printers the Formatter and Hard Disk are replaced as a single part,

System Error: 64.1:YZ

Problem Description: The External Hard Disk accessory does not seem to be connected

Corrective action: Try the following:

1. Switch the power off from the back of the product. Connect the External Hard Disk accessory, check that the USB cable is properly connected and power on the product. If the External Hard Disk accessory is not available (has been lost or broken), proceed with step 2.
2. If the problem persists, power off from the back of the product. Power on the product again while pressing the keys **Menu**, **OK** and **Cancel** keys simultaneously until the Touch Control Panel asks "product configured to use External Hard Disk. Do you want to revert the product to Internal Hard Disk?". Confirm by pressing **OK** (twice). Remove the External Hard Disk accessory (if connected). The product will restart.
3. After the product reaches the Ready state, try connecting any other USB device (known to work properly) to the product port where the External Hard Disk accessory should be connected.
   - If a message appears on the Touch Control Panel reacting to the USB device just connected (such as "Please remove USB device" or "Press on this menu option…"), press **Cancel** and remove the USB Device. This means that the External Hard Disk accessory is faulty and should be replaced. See Formatter on page 370.
   - If nothing appears on the Touch Control Panel reacting to the USB device just connected, the Formatter is faulty and should be replaced. See Formatter on page 370.

     NOTE: For Revision B printers the Formatter and Hard Disk are replaced as a single part,

System Error: 65:YZ

Problem Description: Memory Driver Internal I/O error, I/O Socket Manager Internal I/O error

Corrective action: Try the following:

1. Switch the power off from the back of the product and disconnect the power cord. Reconnect the power cord and power on the product.
2. Check that the unknown port cable is correctly connected to the product.
3. Check that the product has the latest firmware version. If not, update the firmware to the latest version.
4. Replace the Formatter. See Formatter on page 370.
5. Replace the Engine PCA. See EE Box on page 359.

Warning: 68:YZ

Problem Description: Loss of engine counters tracking

Corrective action: The product will continue to function correctly, but the life counters will not continue counting until you restart the product.

System Error: 71:03

Problem Description: Out of memory

Corrective action: Restart the product.

Warning: 71:04

Problem Description: Out of memory.

The total memory available in the product depends on its configuration. It is reported as HP-GL/2 memory or PS/PDF memory. If the amount of memory that the product needs to process the file is more than the amount available, the product will display this system warning. The amount of memory required for processing the file is known as the 'display list memory':

- The display list memory should not be confused with the file size of the print job. The size of the display list memory depends on several variables such as the resolution, file size and file content.
- The display list memory is not visible to the user, but can be consulted by engineers to troubleshoot out-of-memory issues. See Appendix D: How to check the display list memory for an HP-GL/2 job on page 123.
- There have been a few cases in which a print job with a relatively small file size has triggered an out-of-memory message. Such print jobs typically have a large number of objects in them or have complex objects such as raster images with gradients or objects with multiple layers.

Corrective action: Try the following:

1. Upgrade the firmware to the latest version available.
2. Decrease the print resolution to 300 dpi.

   NOTE: If the customer does not accept the print quality after reducing the resolution or using Econofast print mode, proceed to the workaround in step 3.

   – The resolution required by the product to process the file is set by the print mode selected (Best, Normal, Fast). There is a setting available that enables you to decrease the resolution for each print mode to 300 dpi. If this setting is used, the rendering resolution will be reduced, but the output (printing) resolution will remain the default of the selected print mode. There could be an impact on Image Quality because of the reduction in the rendering resolution; this will be especially noticeable in circles and lines with very low inclination.

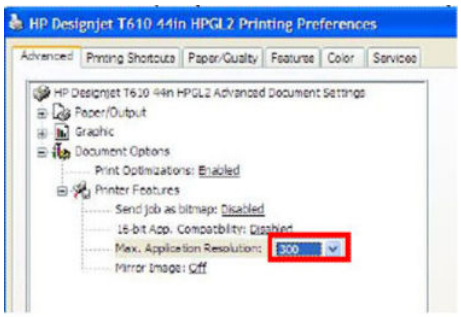

3. Use the 'Econofast' print mode. The rendering resolution will be set by default to 300 dpi. In the Paper/Quality tab of the product properties window, select **Custom options** and press the **Settings** button. In the Custom Print Quality Options window, check the **Economode** box.

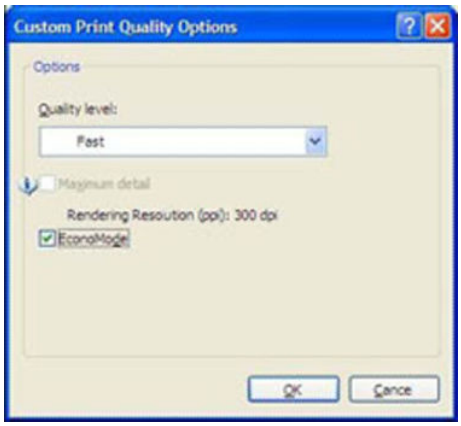

NOTE: If the Out of Memory message still persists, proceed to the next workaround.

4. Out of Memory issues can always be solved if the processing of the job can be performed before reaching the product. This can be done by selecting 'Send Job as Bitmap'. The main processing of the print job will then be performed by the computer. This form of printing is recommended when the print job contains raster images, and mixed plots with raster images and lines, because the process of turning a print job made of raster images to vector images leads to a significant increase in the display list memory.

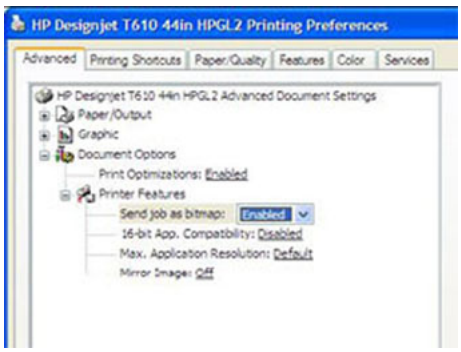

Warning: 72.02:09

Problem Description: Generic firmware Error

Corrective action:

1. Switch the power off from the back of the product and disconnect the power cord. Reconnect the power cord and power on the product.
2. Check that the product has the latest firmware version. If not, update the firmware to the latest version Appendix B: Emergency firmware upgrade with USB flash drive on page 118

NOTE: If you see system error 79:04, see Appendix A: How to troubleshoot SE 79:04 on page 107.

NOTE: A firmware upgrade will not always solve the problem. The best way to solve this problem is to report the error to HP correctly. Make sure that you supply all the information accessed by pressing on the bottom right area of the touchscreen (same place where the cancel icon usually shows), while viewing the system error screen, or preferably provide the product log and diagnostic package to HP. Refer to Understand System Error Codes on page 69 and Appendix C: Obtaining the product log and the diagnostics package on page 119.

Warning: 72.02:YZ

Problem Description: A service calibration should be performed.

Corrective action: To find out which service calibration to perform, print the calibration status. At the Touch Control Panel, select the Internal Prints icon, then **Service information** > **Print calibration status**. Perform whichever calibration is needed.

Warning: 74:YZ

Problem Description: Error uploading firmware update file

Corrective action: Try the following:

1. Switch the power off from the back of the product and disconnect the power cord. Reconnect the power cord and power on the product.
2. Make sure the connection between the computer and the product is functioning properly.
3. Try to update the firmware again.

Warning: 74.1:YZ

Problem Description: Error uploading paper profile update file

Corrective action: Try the following:

1. Switch the power off from the back of the product and disconnect the power cord. Reconnect the power cord and power on the product.
2. Make sure the connection between the computer and the product is functioning properly.
3. Try to upload the paper profile update file again.
4. Make sure the version of the paper profile update file is compatible with the firmware version the product is using. You can check this on the same Web page where you downloaded the paper profile update.

System Error: 74.08:04

Problem Description: Problem with the firmware upgrade process

Corrective action:

1. Reboot the Product
2. Try to upgrade the firmware again, for more information, see Appendix B: Emergency firmware upgrade with USB flash drive on page 118
3. Download again the firmware file from the source, as the original may be corrupted.
4. Replace the Touch Control Panel see Touch Control Panel on page 533

System Error: 75.21:YZ

Problem Description: The spittoons (Left Spittoon, Service Station) have reached 80% capacity.

Corrective action: Use Preventive Maintenance Kit #2 to replace the Left Spittoon and Service Station.

System Error: 75.22:YZ

Problem Description: The spittoons (Left Spittoon, Service Station) are full.

Corrective action: Use Preventive Maintenance Kit #2 to replace the Left Spittoon and Service Station.

System Error: 76:YZ

Problem Description: Hard disk drive is full.

Corrective action: Remove any unnecessary files from the hard disk using the Embedded Web Server. If the problem persists, run the Hard Disk Recovery Utility (see Hard Disk Recovery Utility on page 184).

System Error: 78:08

Problem Description: The job received cannot be printed without borders on this paper.

Corrective action: Use a paper that supports borderless printing.

NOTE: This system error code does **not** require service help. It should be resolved by the customer.

System Error: 78.1:YZ

Problem Description: Media settings area missing in paper settings file

Corrective action: Try the following:

1. Switch the power off from the back of the product and disconnect the power cord. Reconnect the power cord and power on the product.
2. Check that the product has the latest firmware version. If not, update the firmware to the latest version.

System Error: 79:YZ

Problem Description: Generic firmware error

Corrective action: Try the following:

1. Switch the power off from the back of the product and disconnect the power cord. Reconnect the power cord and power on the product.
2. Check that the product has the latest firmware version. If not, update the firmware to the latest version.

   NOTE: If you see system error 79:04, see Appendix A: How to troubleshoot SE 79:04 on page 107.

   NOTE: A firmware upgrade will not always solve the problem. The best way to solve this problem is to report the error to HP correctly. Make sure that you supply all the information accessed by pressing on the bottom right area of the touchscreen (same place where the cancel icon usually shows), or preferably provide the product log and diagnostic package to HP. See Understand System Error Codes on page 69 and Appendix C: Obtaining the product log and the diagnostics package on page 119.

System Error: 81:01

Problem Description: Paper axis error—the copier will restart and run a diagnostic test

Corrective action: None

System Error: 81:YZ

Initial checks: This error can occur because the product has been dropped during transportation, causing structural damage. Before continuing with the 81:YZ troubleshooting, first look for structural damage.

To identify the structural damage, look for the following three things:

- Consistent 81:YZ error codes.
- Platen fingers rubbing on the roller surface, leaving black marks on the roller.

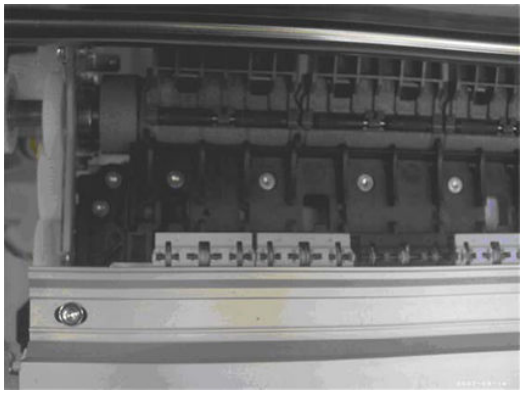

- A gap on the platen beam. If there's any gap in Z (vertical direction) between the plastic feature of the platen and the metal side plate, then the chassis is damaged and the unit cannot be repaired.

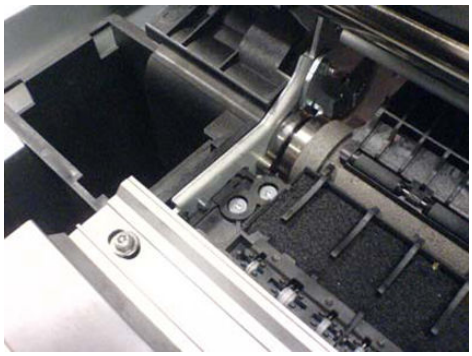

Problem Description: Problem with paper advance. This source of error could come from an error in any of the following systems: paper motor, disk encoder, cables or main electronics.

Corrective action: Try the following:

1. Check for any visible obstacles restricting the movement of the Drive Roller. If there is a wrinkled mass of paper inside the paper path, lift the Pinchwheels (using the Media Lever) and clear the obstruction.
2. Perform the Media Drive diagnostic test to troubleshoot the problem further. See Paper Drive Test on page 137.
3. Perform the Rewinder diagnostic test to troubleshoot the problem further. See Rewinder Test on page 147.
4. Check the connections on the Engine PCA; the Media Advance Drive is connected to the connector labeled Paper Motor.
5. Adjust the encoder disc and motor mount configuration using the Media Advance Drive installation instructions. See Media Advance Drive on page 419.
6. Replace the Media Advance Drive. See Media Advance Drive on page 419.

System Error: 86:01

Problem Description: Scan axis error—the copier will restart and run a diagnostic test

Corrective action: None

System Error: 86:11

Problem Description: Scan Axis movement requires too much force or energy.

Corrective action: Try the following:

1. Check that the cutter disengages correctly.
2. Lubricate the scan axis.
3. Use Preventive Maintenance Kit 1.

System Error: 87:YZ

Problem Description: Problem with the Carriage Encoder Sensor readings

Corrective action: Try the following:

1. Check that the encoder sensor is correctly connected to the Carriage PCA.
2. Make sure the Encoder Strip is not broken or damaged. If necessary, replace it. See Encoder Strip, spring and attachment nut on page 367.
3. Make sure that the Encoder Strip is clean. If it is dirty, clean it, paying special attention to the area near the Service Station. See Cleaning the Encoder Strip on page 544.
4. Clean the Encoder Sensor.
5. Replace the Encoder Sensor.
6. Replace the Carriage PCA. See Carriage PCA on page 323.
7. Replace the Trailing Cables. See Ink Supply Tubes & Trailing Cable on page 389.

System Error: 87.01

Problem Description: Problem finding the Scan-axis encoder reading

Corrective action: Try the following:

1. Switch the power off from the back of the product and disconnect the power cord. Reconnect the power cord and power on the product.
2. Make sure that the encoder strip is clean. If the encoder strip is dirty, clean it, paying special attention to the area near the Service Station. See Cleaning the Encoder Strip on page 544.
3. Clean the encoder sensor.
4. Replace the Encoder Sensor.

System Error: 93:YZ

Problem Description: Unable to pressurize the Ink Delivery System

Corrective action: Try the following:

1. Switch the power off from the back of the product and disconnect the power cord. Reconnect the power cord and power on the product.
2. Perform the Ink Delivery System diagnostic test to further troubleshoot the problem. See Ink Delivery System (IDS) Test on page 149.
3. Check that the cables between the Ink Supply Station and the Engine PCA are not damaged and are properly connected. In case of any damage replace the cable.
4. Replace the Left Ink Supply Station, depending on the results of the diagnostic test. See Left Ink Supply Station on page 384.
5. Replace the Engine PCA. See EE Box on page 359.

Appendix A: How to troubleshoot SE 79:04

Introduction

The system error 79:04 is a generic firmware error (equivalent to a blue screen in windows). It's the system error that the product will display when an unknown exception occurs that cannot be identified as relating to any specific subsystem of the product.

Since this is a generic error, there can be multiple causes behind it. This document will cover the most probable causes behind a system error 79:04 and will recommend the most efficient troubleshooting steps to resolve customer issues.

It is important to mention that, although 79:04 system errors can be caused by a hardware malfunction, the vast majority of 79:04 system errors are pure software or firmware issues. Before doing anything else, you are recommended to try the following general-purpose solutions.

1. Update the product's firmware to the very latest available firmware version, even if the product appears to be running the latest firmware already.
2. Restore the factory settings from the Touch Screen Panel's Setup menu.

If these do not solve the problem, continue reading about other possible solutions below.

Possible causes

Since the 79:04 system error is a generic error, the number of possible causes behind it is large. The majority can be grouped, however, into the following groups.

Job related SE79:04

A specific print job that is not correctly formatted for the product or that is not correctly processed by it can trigger a 79:04 system error.

The incorrect format or processing can come from two sources:

- Incorrect commands in the job itself. For example, a PS job with some commands that do not have the correct PS format.
- Issues applying to the settings in the job

Possible symptoms

79:04 caused by a print job always have the same symptoms:

1. The job is received by the product and starts to process.
2. In the middle of the processing, the product stops and displays 79:04.
3. The product will display the 79:04 system error again after reboot. This is due to the fact that the product will try to reprint the job, which is pending in the queue, after reboot.
4. After the second reboot, the product will start up normally
5. If the same job is sent again, it will always produce a 79:04 system error

   These types of 79:04 system errors are normally caused by jobs that have been generated by 3rd party applications (RIPs, 3rd party drivers, files exported by an application to PS, PDF, HP-GL/2, RTL, ... or any other format supported by the product). Jobs generated by HP drivers will not normally generate 79:04

system errors, since the output that our drivers generate is very controlled and has been designed taking into consideration the characteristics of our product's language interpreters.

There is an exception to this general rule: there are certain applications that can generate their own PS code (Adobe PhotoShop, Adobe Illustrator, Adobe Acrobat, Corel Draw, Freehand, QuarkXpress, ...). When used with a PS driver, these applications generate the output PS themselves, instead of using the driver's rendering capabilities. This is known as PostScript pass-through. So, when using an HP PostScript driver together with an application that has PS passthrough capabilities, the PS code that comes into the product has not been rendered by the HP driver, and, should the source file contain any PS commands that are not correctly processed by the product, a 79:04 system error could occur even though an HP driver is being used.

Solutions and workarounds

When a job consistently generates a 79:04 system error, it is either because of a issue in the product's firmware or because of a defect in the job itself (when it has been generated by 3rd party SW). In order to identify the cause and find out a solution, these issues should always be impapertely escalated to the GBU through the GCC.

Also, there are some workarounds and short-term solutions that can be tested in order to get the customer up and running in the shortest possible time:

1. Send the job using a variety of different settings. Many times, the issue is caused by a combination of the job contents combined with some specific setting(s).
2. If the customer is sending the file directly to the product, try using the HP driver instead.
3. If the issue is occurring when printing through the HP PostScript driver from an application with PS passthrough, try changing the options in the application so that it prints PS as raster (the option is typically located in the "Advanced" options of the application's printing dialog).
4. In some cases, there may be an unfortunate interaction between the particular job and the I/O connection used to send that job to the product. Try sending the same job using a print queue that uses a different type of connection. For example, use a network connection instead of USB, or use the LPD network printing protocol instead of port 9100.

Data related SE79:04

HP Designjet products have Hard Disks and non-volatile memories that contain databases and files that can be modified with user data. Some examples include:

- The product's queue
- The hard drive partitions that contain user jobs
- The database that stores the product settings
- The database that stores accounting information

Some of this data is accessed by the product at start-up, and some others are accessed as needed.

If any of this fields contains corrupt data or data with characters or values that cannot be correctly processed by the product, a 79:04 system error may occur.

Possible symptoms

There are two different types of symptoms for data related 79:04 system errors:

1. When the corrupt data is accessed during start-up:

   a. The product will display a 79:04 during the start up process

   b. Switching the product off and on again will not solve the issue. The product will continue displaying the 79:04 system error until the corrupt data has been cleared through a service procedure

2. When the corrupt data is accessed during normal product operation:

   a. The product will start up normally

   b. When the data is accessed (for example while printing, while navigating the queue or when changing some settings), the product displays a 79:04 system error

   c. The product can reboot normally

   d. When the data is accessed again (typically, under the same conditions as in step “b”), the 79:04 system error is displayed again

Solutions and workarounds

Many times, data-related 79:04 errors are resolved by means of hardware intervention. Since data are stored in physical components (RAM, EEROM and Hard Disk), replacing these components with new ones that are empty usually solves the problem. However, there are quicker and more effective solutions to these types of errors:

1. Clear all information that has been introduced by the user using the standard tools available in the product.

   a. Delete all jobs from the queue (from the Touch Control Panel or the EWS).

   b. Reset to factory defaults to clear the user’s configurations and calibrations.

   c. Delete any non-standard paper preset in the product (both the ones that have been created by the user and the ones that have been installed as OMES profiles through the EWS or the HP product Utility).

2. If step 1 did not resolve the issue, you can use Service Tools to clear additional information that could be causing the issue.

   a. Start the product in Diagnostics Boot Mode.

   b. Perform an EEROM reset.

3. If step 2 did not resolve the issue, it is possible to run a recovery of the hard disk.

   a. Start the product in Diagnostics Boot Mode.

   b. Perform a Hard Disk Recovery. This will erase data from the hard disk and reinstall the current firmware. It may take up to half an hour.

4. If step 3 did not resolve the issue, you can check the hard disk's file system.

   a. Start the product in Diagnostics Boot Mode.

   b. Perform a File System Check. This will fix any error in the file system structure. It may take a few minutes, or up to an hour, depending on the state of the hard disk.

Important note:

It is possible that the corrupt data came to be in the product as a consequence of some activity in the customer’s workflow. In this case, it is possible that the issue will happen again. In these cases, it is very important to understand the sequence of events in the customer’s workflow that led to the error occurring. Once the error can

be traced in the customer's workflow, escalate the issue to the GBU (through the GCC). This is done to implement any changes in the product's firmware that can prevent these issues occurring again.

Network related SE79:04

Most HP Designjet products have built-in networking capabilities. Network settings can be set manually, but in the majority of cases, they are obtained automatically from the product. These settings include many different fields, such as IP address and subnet mask, available gateways, host and domain names, etc.

In some cases, there can be issues in the firmware that can cause a certain value in one of these fields to be interpreted incorrectly, and this can lead to a 79:04 system error.

Symptoms

There is no single set of symptoms that can absolutely pinpoint a network related 79:04 system error. However, the following guidelines can be applied:

- It can happen when the product starts up or when accessing the Network Configuration section of the Touch Control Panel or Embedded Web Server. It can also occur apparently randomly when the product is connected to the network. It can also occur any time a particular network action is performed, for example when print jobs are sent to the product, or when connecting to the Embedded Web Server.
- In all these cases, repeating the action after restarting the product with the LAN cable disconnected does not cause the 79:04 error to occur.

Solutions and workarounds

In the majority of cases, these issues are due to an issue in the product's firmware. As soon as the conditions in which the issue happens are understood, it should be escalated to the GBU through the GCC.

At the same time, the following short-term solutions and workarounds can help the customer to get up and running in the shortest possible time:

1. Disconnect the network cable in order to restart the product and change network settings.
2. Try resetting the embedded networking settings or Jetdirect settings. See Connectivity troubleshooting on page 63.
3. In the Network configuration menu in the Touch Control Panel, disable any protocols that you are not using, including IPv6, IPSec, SNMP and WebServices.

   NOTE: Disabling SNMP or WebServices means that customers may not be able to see product status information; and s and Mac OS print-queue installers will require the user to specify the product's IP address and product model manually.

4. If the above steps do not work, try using a different type of print queue. For example, if the problems occur when printing to a Port 9100 Socket print queue, try using the LDP protocol instead, or USB. To do this, create a new print queue of the type required and try printing using the new queue instead.
5. If the above steps do not work and the customer is using the product's embedded LAN connection, try using an accessory Jetdirect card instead. Similarly, if the customer is having problems using an EIO Jetdirect card, try disconnecting the Jetdirect card and using the embedded networking.

In most cases, network problems that seem to occur randomly (when the product is not being sent print jobs) are caused by an interaction between some other devices in the customer's network and the product. Isolating the product from other devices in the network as much as possible by connecting the product to a private network or a different network subnet may help the customer continue working until the root cause of the problem is understood and solved.

User Interaction related SE79:04

In some cases the product may not react as expected when a certain set of conditions coincide. In these cases, if the product doesn't know how to react, it may simple display a 79:04 system error and force a reboot. Some examples (not real) that can help to illustrate this:

- An error occurs when a job is cancelled when it is at the "Finishing print" state and when the queue is disabled
- An error occurs if the Scanner is opened while the product is checking the printheads

These errors will most likely only happen in very specific corner cases that have not been identified during the development or the qualification of the product, so normally, they do not severely impact the customer, as they do not affect their regular working flows.

Symptoms

The symptoms here are as numerous as the number of possible interactions between the user and the product. In any case, it's possible to identify the steps that caused the error to occur and avoid them as the steps will always be the same with no variance.

Important: An major element in determining the error is what the state the product was in at the time the error was displayed. Actions the user has made when the product is drying for example can produce an error, whereas the same action when the product is doing something else (or is idle) may not produce any errors.

Solutions and workarounds

The recommended action plan in these cases is to identify the previous steps that caused the error and:

1. Escalate the issue to the GBU through the GCC in order to have it corrected in the firmware.
2. Recommend to the customer that they try to avoid the same steps to prevent the issue
3. If the conditions that cause the error are in the customer's regular workflow, try to identify a different way of achieving the same result out of the product.

Random SE79:04: Concurrence issues and memory leaks

Some 79:04 errors happen randomly when the product is being heavily used. However, it's impossible to find a single set of conditions that reproduce the problem. It just happens from time to time, without a defined pattern.

These random 79:04 can have two different types of root causes:

- Memory leaks: before a program is executed, it allocates the memory it will need. After the execution is complete, the allocated memory is freed to be used by other programs. If the allocation or the release of the memory are not properly programmed, every time the program is executed some memory will be incorrectly labeled (either as used or as free). This is known as a memory leak. When a program with a memory leak is executed a lot, the memory becomes progressively full (since it is not properly freed). When the leak becomes too big, the product is left 'out of memory' to execute new processes and a 79:04 is triggered
- Concurrence issues: there are certain resources that can be accessed by multiple programs or by multiple executions of the same program (what is known as multiple threads). Access to these resources must be correctly controlled to prevent unexpected behavior. Issues caused by an incorrect control of these resources are concurrence issues.

In the following you have a simple example: let's imagine that there is a counter that controls the communication between the Jetdirect card and the product's firmware. Whenever a new packet of information is sent by the Jetdirect card to the product, the counter increases. When the product receives the packet and processes it

correctly, the counter decreases. Another process checks the counter from time to time to see its value and take conclusions from it. If the counter is near 0, it means that the product is processing correctly, and if it grows too big, it may mean that there is a bottleneck somewhere and maybe the Jetdirect card throughput is decreased to control its speed to the product. However, if the access to this counter is not properly controlled, undesirable effects may happen: in a real environment, a Jetdirect card processes thousands of information packets per second, so this counter is updated frequently, both by the Jetdirect and the product. If at a certain point the Jetdirect and the product try to access the counter at the same time and the code is not prepare to handle this, it may happen that the Jetdirect cannot increase the counter because the product is writing to it, and what's worse, that it does not realize this fact. If this happens a few times each second, it may happen that the counter is decreasing faster than it's increasing and that at a certain point it has a negative value. And then, what will the process that is checking this counter do? Most likely, the process will not be prepared to react to a negative value and will launch an exception that will trigger a 79:04 system error.

Symptoms

This type of 79:04 always occurs in heavy load conditions, so the symptoms will always be similar to this pattern:

- A product that is being heavily used (printing a project or in a reprographics environment) produces 79:04 errors randomly, forcing the user to reboot.
- After rebooting, the product can be used without any issues for an extended period of time, but if the workload is consistently high, a random error will occur again.
- The error can never be associated with a specific file. The file that was being printed when the error occurred the last time can be printed without issues after reboot. And a file that has been printed without issues several times can trigger the error in the future.
- This error is very dependant of the workflow the customer has. The most common user workflows have been extensively tested both by HP and by our beta sites, so it is highly unlikely to see random 79:04 issues in these cases. These random issues tend to occur in very specific corner cases, and cannot be reproduced unless the exact conditions of the workflow are replicated. They normally happen when sending files generated by external applications (RIPs, 3rd party drivers, etc.)

Workarounds and solutions

Random 79:04 errors are, by far, the most complex ones to diagnose and to fix. The only solutions available in these cases are:

1. Run the Hard Disk Recovery utility (see Hard Disk Recovery Utility on page 184).
2. Identify the root cause (either in the files or in the firmware) and fix it in the code, which requires the intervention of the GBU.
3. Test any options available to modify the customer's workflow and see if any combination of them solves the issue.

In both cases, a profound understanding of the customer's workflow is necessary. In particular, the information that is needed is:

- Product Touch Control Panel settings
- Application that is being used; RIP or driver that is being used
- Application/RIP/Driver settings
- Type of output files this application, RIP or driver is generating
- Some sample files that are representative of what the customer is using

- Operating System
- Method of connection to the product
- A description of the normal flow when the issue occurs and the typical frequency of occurrence (for instance, once every hour when sending several files non-stop, each of them with multiple copies)

You are recommended to use the Diagnostics Package to obtain this kind of information.

With this information, the environment can be replicated in order to try to find workarounds. This is also the information that will be needed at the GBU to investigate and fix the root cause of this issue once it is escalated.

Hardware related SE79:04

Hardware is, by far, the least likely cause of a 79:04 system error. Replacing hardware components does not normally fix the issue and increases the total turn around time in finding a workable solution.

In some cases, a failure in a component in the product's electronics may cause a 79:04 system error, since the product's electronics are involved in the execution of the firmware and the processing of jobs. It needs to be noted, however, that hardware failures in the electronics tend to produce specific system errors that point directly to the component that is failing.

Some hardware problems that could cause the 79:04 error are:

- Defective clusters in the Hard Disk drive. If these clusters are used to execute the firmware or to process a job, they may produce a 79:04. It needs to be noted however, that most 79:04 errors that are resolved by an HDD replacement are in fact, data related 79:04 that could have been solved more efficiently and quickly following the other steps.
- Defective memory segments. If the RAM memory has some defective segments, a 79:04 may occur when these segments are used.
- Intermittent defects in the electronic components that are involved in the processing of a job: Carriage PCA, Trailing cable, Formatter and Engine PCA. This is a highly unlikely cause, since defects in these components will produce subsystem specific errors.

Symptoms

There's no single set of symptoms behind hardware related 79:04 system errors. The most usual ones, however are:

- 79:04 during start up. Rebooting the product may or may not solve the problem
- 79:04 while processing or printing a job. Rebooting the product and printing the same job does not always produce the error.

Solutions and workarounds

In the following procedure perform each step as it appears in the list and only move on to the next step once you are sure the 79:04 error has not been cleared:

1. Reboot the product in Diagnostics Boot mode and execute the service tests to validate the functionality of all the electronics components
    - Perform the troubleshooting for "data related 79:04" system errors, refer to Appendix A: How to troubleshoot SE 79:04 on page 107
2. Replace the memory

3. Replace the HDD Hard Disk Drive on page 378
4. Escalate the issue before replacing any additional parts.

Troubleshooting based on symptoms

This section will describe which troubleshooting steps to perform for a 79:04 system error based on the symptoms of the issue. Perform each step as it appears in the list and only move on to the next step once you are sure the 79:04 error has not been cleared:

Touch Control Panel displays 79:04 at Start-up

1. Reboot the product twice. If the System error has been caused by a job because its in an incorrect format, rebooting twice will clear the error (the first time after reboot, the product will attempt to print the job again, and this will cause the error to reoccur). If rebooting the product twice solves the issue, then it is an issue related to the job and you should refer to the section on a Job Related SE79:04.
2. Upgrade the product's firmware. Even if the currently installed firmware version is the latest one, re-install it. Since the product cannot start normally, you will need to upgrade the firmware while booting the product in Diagnostics Boot Mode. For this, a special file and a special upgrade process will be needed. For more information, see Appendix B: Emergency firmware upgrade with USB flash drive on page 118 .
3. Disconnect the network cable and restart the product. If this solves the problem, then it is a network related 79:04 and you should follow the guidelines for this type of 79:04.
4. Remove all cartridges, printheads and printhead cleaners (if available). Unload the paper. Restart the product. If the product can start normally, insert the consumables one by one until you isolate the one that is causing the error. Do **not** insert any of the replaced consumables in another product
5. Restart the product in Diagnostics Boot Mode and perform the "Electronics test". If an electronic component is identified as faulty, replace it.
   - Restart the product in Diagnostics Boot Mode and Reset the EEROM. If the issue is solved by this, this is a data related 79:04 system error and you should follow the guidelines, refer to Appendix A: How to troubleshoot SE 79:04 on page 107.
6. If the unit has been used for some time and suddenly has started to show this behavior, replace the Hard Disk Drive.
7. If the issue is new and the issue happens since the first boot, do **not** replace the HDD.
8. If none of the previous steps solved the issue, escalate the issue with specific information, refer to Reporting a system error to HP support on page 69
   - Unit information: S/N, P/N, accessories
   - Conditions where the problem occurs and conditions prior to the first occurrence of the problem
   - The results of the previous 8 steps
   - The System Error detailed information (this can be obtained by pressing on the bottom right area of the touchscreen (same place where the cancel icon usually shows).
   - The product logs. In order to obtain the product logs, see Appendix C: Obtaining the product log and the diagnostics package on page 119.

Touch Control Panel displays 79:04 during product operation – not while sending jobs

1. Reboot the product.
2. Upgrade the product's firmware. Even if the currently installed firmware version is the latest one, re-install it.
3. Reset the product to factory defaults, EEROM Reset Utility on page 163
4. In order to narrow the scope of the issue, try the following:
   a. Disable the queue
   b. Disable any unused network protocols
   c. Disable SNMP and WebServices (if they are available in the product)
   d. Disable "Sleep mode" from the Service Utilities menu
   e. Delete any Paper Presets that you may have uploaded or created using the product's Spectrophotometer
5. Restart the product in Diagnostics Boot Mode and perform the "Electronics test". If an electronic component is identified as faulty, replace it.
6. Format the Hard Disk drive. To do so, you will need to start the product normally, enter the Service Utilities menu and then the Secure Disk Erase option. Set the Erase method to "Fast Erase" and then perform the disk erase process, refer to Disk Wipe DoD 5220.220M on page 182. This will take 45-75 minutes and will erase all user information from the disk, resolving any issue caused by corrupt data. After the erase process, a firmware update will be required. If this solves the issue, this is a data related 79:04 system error and you should follow the guidelines for this type of error.
7. Try to identify the combination of settings or actions that led to the system error and try to reach the same result with a different combination. Escalate the issue to fix the original problem.
8. If none of the previous steps could solve the issue, escalate it with specific information, refer to Reporting a system error to HP support on page 69.

Touch Control Panel displays 79:04 while printing

While printing a single job

The error happens after a single job is sent. It's easy to identify which job has produced the error, since every time that this same job is sent, the error is displayed.

1. Reboot the product twice (after the first reboot, the product will show the 79:04 system error again, since the product will attempt to reprint the last job in the queue, which is the one that caused the issue)
2. If you are using an HP driver, update the driver to the latest version
3. Upgrade the product's firmware. Even if the currently installed firmware version is the latest one, re-install it. Send the job using different print settings. The following ones can be helpful:
   a. Try sending the job without selecting a paper profile in the driver
   b. Try changing the Image Quality settings
   c. If you are using the HP-GL/2 driver, try the option "Send job as bitmap"

   d. If you are using the PS driver, try using the HP-GL/2 driver instead

   e. If you are using the PS driver from an Adobe application (or any other application that can handle PS), try changing the application's print settings so that the PS is generated as Raster.

4. Try the following Touch Control Panel settings:

   a. Change the Print Language option in the Touch Control Panel from "Automatic" (which is the default setting) to the language that is being printed (PS, HP-GL/2, ...)

   b. Queue = OFF

   c. Start Printing = After processing

   d. For PS SKUs, try changing the encoding setting ("Automatic" by default) to Binary or ASCII

5. If you are using a 3rd party application that does not print through the HP driver, try modifying the printing workflow by:

   a. Using an HP driver

   b. Changing the settings in the application's printing dialog

6. If you are using an accessory Jetdirect card, try using the internal network connector or USB (if available).

7. Escalate the issue, providing specific information, refer to Reporting a system error to HP support on page 69.

Random 79:04 during continuous printing

The error does not happen with a single job. It happens randomly during continuous printing, normally while the product is managing a heavy load (printing a project or in a reprographics environment).

This type of error is caused either by memory leaks or by concurrence issues in the product's firmware. They normally happen in non common environments where these memory leaks or concurrence issues that have not been detected during qualification have occurred. These issues cause the product to crash at a completely random moment during printing, and are not associated to a specific job.

Because of this, troubleshooting these issues is normally quite complex.

1. Reboot the product twice (after the first reboot, the product will show the 79:04 system error again, since the product will attempt to reprint the last job in the queue). If after the second reboot the issue continues occurring randomly, continue troubleshooting.

2. If you are using an HP driver, update the driver to the latest version

3. Upgrade the product's firmware. Even if the currently installed firmware version is the latest one, re-install it.

4. Try restoring the factory default settings from the product's Touch Control Panel.

5. Try the following changes in the workflow:

   a. Change the Print Language option in the Touch Control Panel from "Automatic" (which is the default setting) to the language that is being printed (PS, HP-GL/2, ...)

   b. Queue = OFF

   c. Start Printing = After processing

d. For PS SKUs, try changing the encoding setting (“Automatic” by default) to Binary or ASCII

e. If you are using the HP-GL/2 driver, try sending the job as a bitmap

6. If you are using a 3rd party application that does not print through the HP driver, try modifying the printing workflow by:

   a. Using an HP driver

   b. Changing the settings in the application’s printing dialog

7. Escalate the issue with specific information, refer to Reporting a system error to HP support on page 69

Appendix B: Emergency firmware upgrade with USB flash drive

When it is not possible to perform a firmware upgrade using the normal procedures (for instance, in case of a System Error and the Embedded Web Server is unavailable), it is possible to perform an emergency firmware upgrade using a USB flash drive. Follow the next steps:

1. Copy a valid FMW firmware file onto a USB flash drive. This file is provided in Designjet Online. Remove all other contents in the flash drive.
2. Turn off the product.
3. Connect the USB flash drive to the USB host port on the formatter.
4. Turn on the product and follow the instruction on the Touch Control Panel.

Appendix C: Obtaining the product log and the diagnostics package

The product keeps an internal log of its own actions. When a system error occurs, the product log can help to find the cause and the solution. By default, whenever it restarts, the product deletes the current log and starts a new one, to avoid using a lot of hard disk space. Once the logs have been captured, the information can then be escalated to HP division for analysis.

There are two types of diagnostic package that you can obtain.

- Diagnostic package (reduced level)
- Extended diagnostic package (full level). Includes the same files than the reduced level package, adding the product internal logs.

Reduced level diagnostic package is always enabled by default, but very frequently you will need to retrieve the extended diagnostic package to be able to check the product logs. Before retrieving the extended diagnostic package or product logs with the methods described next, you need to enable the logs in the product. There are two processes that can be used to enable the logs, through the touch control panel or through the Embedded Web Server.

Enabling the logs in the product through the touch control panel

1. Turn off the product with the Power Key on the left of the Touch Control Panel.
2. Press and release the Power Key to turn on the product.
3. Wait for about 10 seconds until the 6 buttons on the Touch Control Panel come on and then press and release one after another the **RIGHT** -> **HOME** buttons.
4. Wait for the unit to complete the booting process. The logs are now enabled in the product even if the product hangs and shows a system error.

Enabling the logs in the product through the Embedded Web server

1. You can access the Embedded Web Server by typing the IP address of the product in a Web browser. In the **Support** tab, click **Service support** to display the following page.

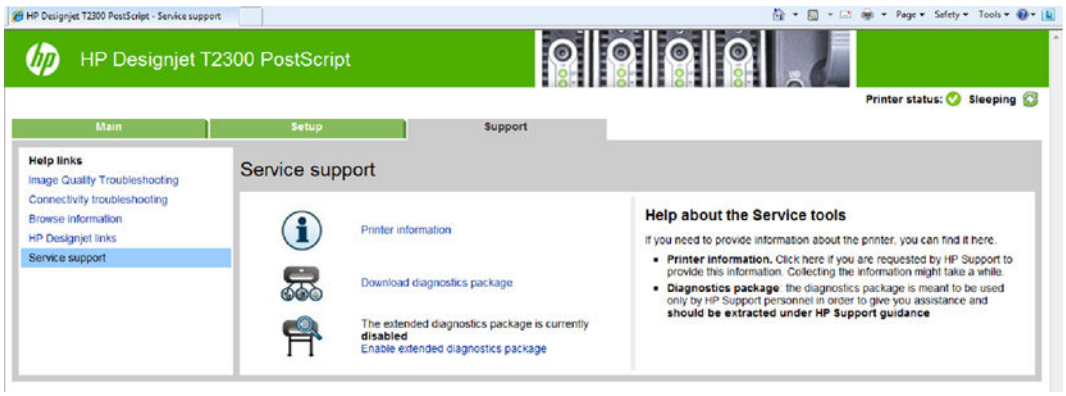

2. To enable the extended diagnostics package, click **Enable the extended diagnostics package**. The product needs to be restarted after enabling or disabling the extended diagnostics package.

Retrieving the diagnostic package

There are two ways of retrieving the diagnostic packages:

- From the Touch Control Panel with a USB flash drive.
- From the Embedded Web Server.

NOTE: If the extended diagnostic package has been activated, it will be the only one available for download with any of the two methods. In order to use the reduced diagnostic package, you must disable the extended diagnostic package first.

When you have obtained the information, it should be attached to the customer case.

Retrieving the diagnostic package through the Touch Control Panel method

This method works only if you have a standard USB flash drive. If you do not have a flash drive, use the Embedded Web Server method.

1. Take a standard USB flash drive, formatted as FAT32.
2. Create an empty file in the USB flash drive (right-click, **New** > **Text Document**) and name it **pdipu_enable.log**. Then insert the USB flash drive into the product. Once the product recognizes the USB, a short beep will be emitted.
3. The product starts to copy the diagnostic package to the USB flash drive. Wait for one or two minutes. You may hear several short beeps for each file copied to the USB flash drive.
4. When you hear one long beep, that means the entire diagnostics package and the product log have been copied to the USB flash drive. You can now remove the drive.
5. It will have created a folder with the name *part number_serial number_time stamp*, and in this folder you'll find one or more files with the extension **trb**. As the name of the folder contains the serial number, you can reuse the flash drive for different products and the information will not be lost.
6. Disable the logs in the product after the diagnostic package has been retrieved. See Disabling the logs in the product through the touch control screen on page 121.

Retrieving the diagnostic package through the Embedded Web server method

1. You can access the Embedded Web Server by typing the IP address of the product in a Web browser. In the Support tab, click Service support to display the following page.

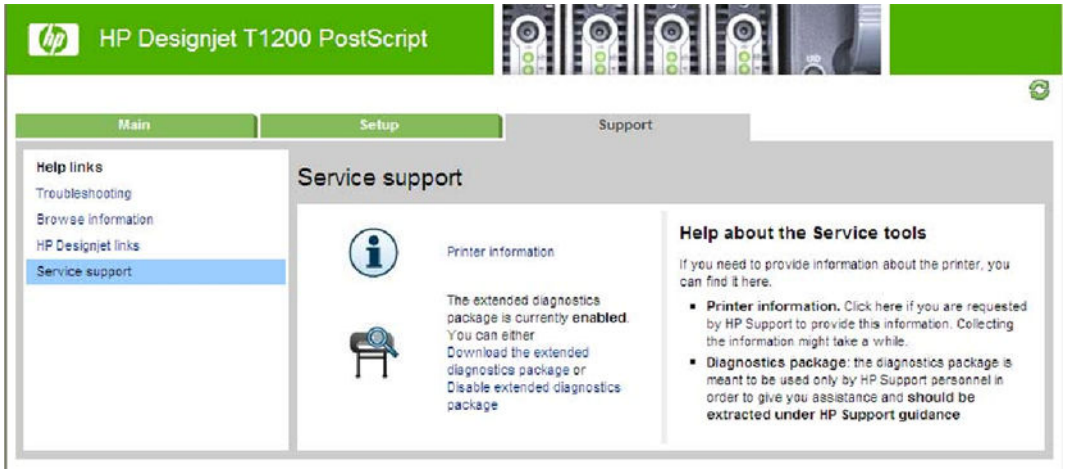

2. You can download the package by clicking **Download diagnostics package** or **Download the extended diagnostics package**, depending if the extended diagnostics package has been activated or not.

3. When you have finishing using the extended diagnostics package, remember to disable it; otherwise it could affect product performance or even cause undesirable side-effects..

Retrieving logs without the diagnostic package

1. Turn off the product with the Power key on the Touch Control Panel.

2. Enable logs, refer to Enabling the logs in the product through the touch control panel on page 119

3. After DO NOT REBOOT is displayed, retrieve at least the current product log from the following 'URL: http:<'IP adress'>hp/device/3432/8828/tmp/. Click the file once to select it, then right-click and select Save target as.

4. The printer.log file contains a log of the product activity since it was last restarted. Typically you will find a file called printer_previous.log, that contains the printer.log as it was before the last restart. Previous logs are compressed and stored in .gz files whose names contain the date and time of the product restart. You may wish to download some of these files as well.

5. Disable the logs in the product (see next).

Disabling the logs in the product through the touch control screen

1. Turn off the product with the Power key on the Touch Control Panel.

2. Press and release the Power Key to switch on the product.

3. Wait for about 10 seconds until the 6 buttons on the Touch Control Panel come on and then press and release one after another the **RIGHT** -> **BACK** buttons

4. Wait for the unit to complete the booting process. The logs are disabled.

5. Disable the logs in the product (see next).

Disabling the logs in the product through the Embedded Web Server

1. You can access the Embedded Web Server by typing the IP address of the product in a Web browser. In the **Support** tab, click **Service support** to display the following page.

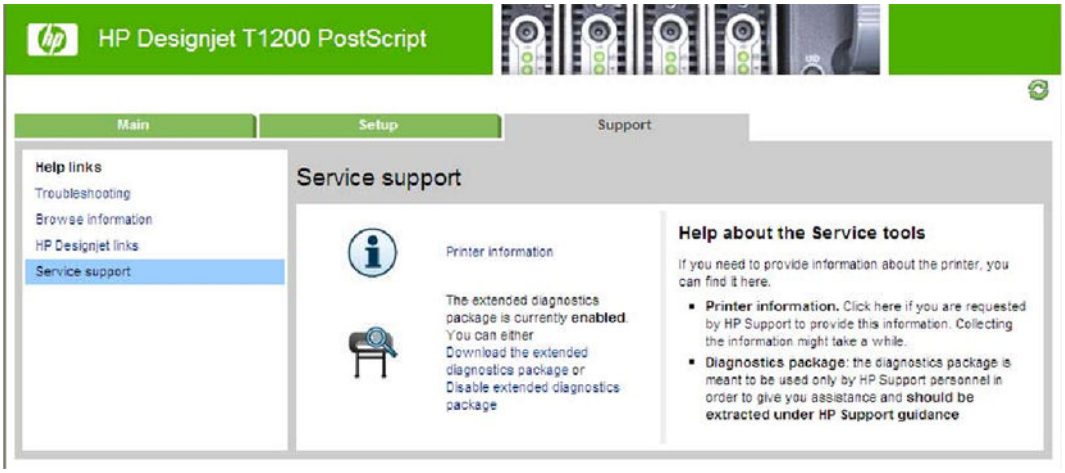

2. Click on Disable extended diagnostics package to disable the logs..

Appendix D: How to check the display list memory for an HP-GL/2 job

The display list memory is the memory the product needs to process an HP-GL/2 file.

If the display list memory that the product needs is greater than the dedicated file processing memory available, the product will show an out-of-memory message SE 71:04.

Table 2-1 Different memory capacities

Printer Series	Virtual memory[1]	Physical memory	Hard drive
T770/T770 HD	2GB/8GB[2]	384/MB/384MB	NA/160GB
T790	8GB	640MB	160GB
T795	16GB	640MB	160GB
T1200/T1200ps	32GB	384MB	160GB
T1300	32GB	640MB	160GB
T2300 eMFP	32GB	640MB	160GB
Z2600/Z5600	64GB	640MB	320GB

[1] Dedicated file processing memory is a partition of the internal hard disk that enables file processing. This is the maximum display list memory that an HP-GL/2 job can use.

[2] The HP Designjet T770 can be upgraded to 8GB with the Memory or PostScript Upgrade

Check the display list memory

1. Restart the product, to clear the previous display list.
2. Send the job that you want to check to the product.

   TIP: You don't need to print the job, the print preview is enough.

3. Generate the diagnostic package using the Embedded Web Server (from the **Support** tab, not the extended diagnostic package).
4. Go to http://IP/hp/device/3432/8828/tmp/pdldir.txt and press F5 till the pdldir.txt file is generated.
5. Sum each row (HPG.0, HPG.1, HPG.X, ...) to get the display list memory needed for this job.
   - Each HPG vector can hold 2GB.
   - Each row from HPG.0 to HPG.15 is a vector of dedicated file processing memory.
   - For the T770, only the HPG.0 vector is available (maximum 2GB). For the T770 HD, only vectors HPG.0 to HPG.3 are available. For the T1200, vectors HPG.0 to HPG.15 are available (maximum 32GB)
   - Each row shows units in bytes. See the example below.

     Example:

     ```
     total 1480
     -rw-rw-rw- 1 root root 10485760 Jan 4 11:09 HPG.0
     -rw-rw-rw- 1 root root

     0 Jan 4 11:09 HPG.1
     -rw-rw-rw- 1 root root 0 Jan 4 11:09 HPG.10
     ```

```
-rw-rw-rw- 1 root root 0 Jan 4 11:09 HPG.11
-rw-rw-rw- 1 root root 0 Jan 4 11:09 HPG.12
-rw-rw-rw- 1 root root 0 Jan 4 11:09 HPG.13
-rw-rw-rw- 1 root root 0 Jan 4 11:09 HPG.14
-rw-rw-rw- 1 root root 0 Jan 4 11:09 HPG.15
-rw-rw-rw- 1 root root 0 Jan 4 11:09 HPG.2
-rw-rw-rw- 1 root root 0 Jan 4 11:09 HPG.3
-rw-rw-rw- 1 root root 0 Jan 4 11:09 HPG.4
-rw-rw-rw- 1 root root 0 Jan 4 11:09 HPG.5
-rw-rw-rw- 1 root root 0 Jan 4 11:09 HPG.6
-rw-rw-rw- 1 root root 0 Jan 4 11:09 HPG.7
-rw-rw-rw- 1 root root 0 Jan 4 11:09 HPG.8
-rw-rw-rw- 1 root root 0 Jan 4 11:09 HPG.9

Display list => HPG.0 10485760 bytes
```

3 Diagnostics Menu

- Introduction
- Diagnostic Tests and Utilities

Introduction

This chapter explains how to use the product's diagnostic tests and utilities, and what to do in the event of any failure.

NOTE: If possible, always perform a diagnostic test on a component that you are about to replace, to make sure that is the component that has failed. If the test on that component passes, there is no need to replace it.

Initialization Self Test

Initialization sequences

Whenever the product is switched on, it automatically performs a series of internal self-tests and mechanical initialization sequences. If any part fails, a system error will appear and you should consult System Error Codes on page 69.

Auto-Diagnostics Test

In the event of a paper or scan-axis jam triggering a system error 86:01 will be displayed.

After restarting, the product will exercise several electromechanical subsystems involved in Paper or Scan Axis movement. If necessary, you may be asked to move the carriage manually or check whether the main roller is moving. You may also be asked to launch an Auto-Diagnostics Test.

- In the event of a paper jam, if another paper jam occurs during the first 15 paper advance movements after the product restarts, the product will ask you to launch the Paper Axis Auto-Diagnostics.
- In the event of a scan-axis jam, if another scan-axis jam occurs during the first 50 carriage movements after the product restarts, the product will ask you to launch the Scan Axis Auto-Diagnostics.

A final result will be shown with all the collected data.

Phone Support

NOTE: In certain circumstances, a Call Agent can try to troubleshoot the product by requesting the customer to perform a Service Test over the phone. Using this process, it can be determined whether the product requires any on-site maintenance.

Remember that the key combination for the customer to enter the Service Tests and Utilities is different from the one that the engineer will use.

Diagnostic Tests and Utilities

The following is a list of all diagnostic tests and utilities available in the product. For instructions on entering the Diagnostics menu, see Entering the Diagnostics Menu on page 128.

Scan Axis Test on page 128

- Star-wheel lifter
- PRS
- Scan axis
- Cutter

Paper Drive Test on page 137

Electronics Module Test on page 139

- Power Supply
- Formatter
- Engine Board
- Plotter Information

Carriage Assembly Test on page 141

Sensors Test on page 144

Rewinder Test on page 147

Ink Delivery System (IDS) Test on page 149

- Ink Delivery System
- Check ink supplies
- Check leakage

Service Station Test on page 156

- Service station
- Primer motor

I/O Information Utility on page 161

Enable I/O Interfaces Utility on page 161

Unit Information Utility on page 162

EEROM Reset Utility on page 163

CryptoAsic PCA Utility on page 164

Touch Control Panel Lock Reset on page 166

Hard Disk Recovery Utility on page 166

File System Check on page 167

Entering the Diagnostics Menu

1. Make sure the product is switched off with the **Power** key on the side of the Touch Screen Panel, and **not** with the power switch on the back of the product.
2. Press and release the **Power** key to switch on the product.
3. Wait for about 10 seconds until the 6 buttons on the Touch Control Panel have come on and then press and release one after another **Cancel> Home> Help** buttons.

   NOTE: Do not push the icons all at the same time, push each one in the order shown above and release each icon before pressing on the next icon.

4. The 6 buttons on the Touch Control Panel will then blink 4 times; then wait until the product completes the initialization sequence and shows the **Diagnostics menu**.
5. In the **Diagnostics menu** scroll up and down sliding the finger vertically on the Touch Control Panel and press on the desired option.

NOTE: The Diagnostic Tests and Utilities work in a special mode that does **not** require the full initialization of the product. Therefore, whenever you have finished a test, you **must** power off the product and power on again before trying to print or before executing another test.

NOTE: In some cases a quick press of a button may not be recognized by the product. When pressing a button, be sure to press it deliberately for about 1 second.

NOTE: If the product hangs up during a test, switch the product off and restart from step 1.

Scan Axis Test

The complete Scan Axis test consists of individual tests for the different components related to the Scan Axis. The subsystems included in this assembly are:

- Star Wheel Lifter
- Automatic PPS Adjustment.
- Scan Axis Servosystem
- Cutter

You must perform the Scan-Axis Test after:

- System Error Code 42:XZ.
- System Error Code 47:XZ.

- System Error Code 73:XZ.
- System Error Code 87:XZ.
- System Error Codes related to Scan-Axis shutdown or Carriage jam.

Diagnostic tests also need to be performed after removing or replacing certain product components. If you have removed or replaced product components, check the Service Calibration Guide to Removal and Installation on page 267 to see which tests and calibrations you need to perform.

CAUTION: ALL THE COVER SENSORS ARE DISABLED WHEN IN THE SERVICE TESTS MENU. IF THE CARRIAGE IS MOVING IT WILL NOT STOP IF THE SCANNER IS OPEN, SO BE VERY CAREFUL NOT TO PUT YOUR HANDS INSIDE.

NOTE: IF POSSIBLE, ALWAYS PERFORM THIS TEST BEFORE REPLACING ANY COMPONENT OF THE SCAN-AXIS.

Star Wheel Lifter test

The Star Wheel Lifter subassembly is designed to move the Star Wheel support to the up and down positions. This is used to load roll or sheet paper and avoid damage to the Star Wheel caused by paper jams etc.

Perform the Scan Axis - Star Wheel Lifter test as follows:

NOTE: Perform this test with the Printheads and the Tubes System installed in order to get values that can be compared correctly.

1. In the Diagnostics menu, select **Scan Axis** .

2. The Touch Control Panel will display the following screen, select **Star Wheel Lifter**.

If there is a failure at any point during the tests, the Touch Control Panel will display the relevant **System Error Code**. To troubleshoot any displayed error codes, see System Error Codes—Full Descriptions on page 78.

3. The product then starts the Star wheel lifter PWM control test to check the subsystem. As the test executes the Touch Control Panel displays the following messages:

- Initializing
- Checking movement
- Testing...
- Getting information
- Checking Status

4. The Touch Control Panel displays the test results and prompts you to continue.

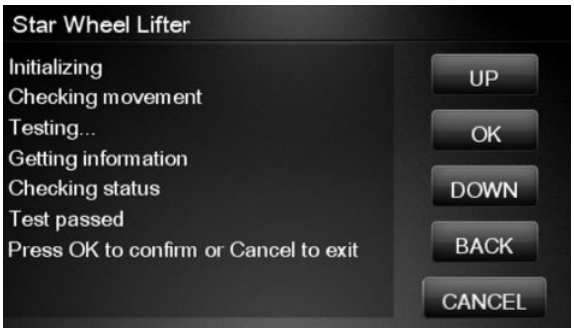

5. Press **OK** to continue. Once you continue the test, the Touch Control Panel displays the following messages:

- Checking motors
- Checking movement
- Getting data
- Analyzing
- Checking status
- Checking motor
- Checking movement
- Checking motor data
- Analyzing
- Checking Status

If there is a failure at any point during the test, the Touch Control Panel will display the relevant **System Error Code.** To troubleshoot any displayed error codes, see System Error Codes—Full Descriptions on page 78.

6. The Touch Control Panel shows the test complete display for a few seconds.

7. Press **OK** to end the test and restart the product.

PRS Test

The PRS subsystem is designed to move the carriage assembly between two predetermined vertical positions with respect to the plane of the print platen. This allows different papers of different thicknesses to be used without losing print quality.

Perform the Scan Axis - PRS test as follows.

NOTE: Perform this test with the Printheads and the Tubes System installed in order to get values that can be compared correctly.

1. In the Diagnostics menu, scroll to **Scan Axis** and press on this menu option.

2. The Touch Control Panel will display the following screen, select **PRS**.

3. In the **Scan Axis** submenu, scroll to **PRS** and press **OK** to start the test

   The product will start the Scan Axis subsystem Common Initialization and PRS test initialization. If there is a failure at any point during the tests, the Touch Control Panel will display the relevant system error code. To troubleshoot any displayed error codes, see System Error Codes—Full Descriptions on page 78.

4. The product then starts the PRS test to check the subsystem. As the test executes, the Touch Control Panel displays the following messages:

   - Initializing
   - Checking movement

5. Once the test has completed, the Touch Control Panel prompts you to confirm that the PRS moved.

6. If the PRS moved, press **OK** to accept the results. If the PRS did not move, press **Cancel** to reject the results and exit the test.

7. Press **OK** to end the test and restart the product.

Scan Axis Test

The Scan Axis subsystem is designed to move the carriage assembly between two predetermined horizontal positions with respect to the plane of the print platen. This allows papers of different widths to be used without losing print quality.

Perform the Scan Axis - Scan Axis test as follows:

NOTE: Perform this test with the Printheads and the Tubes System installed in order to get values that can be compared correctly.

1. In the Diagnostics menu, select **Scan Axis.**

2. The Touch Control Panel will display the following screen, select **Scan Axis**.

3. The product checks the Scan Axis motor. The Touch Control Panel displays the following messages:
   - Initializing
   - Checking motors
4. Depending on the results of the tests, you may be asked to perform the following operations.
   a. Open the Scanner (MFP only) or Window.

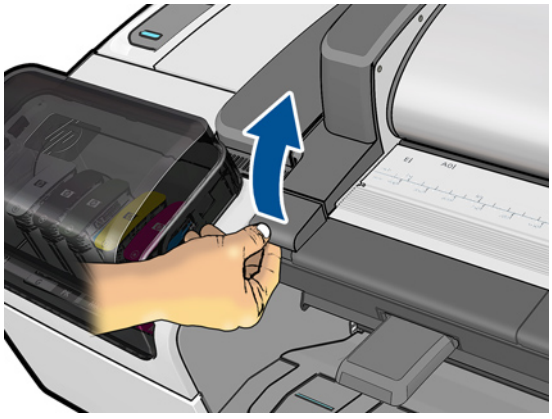

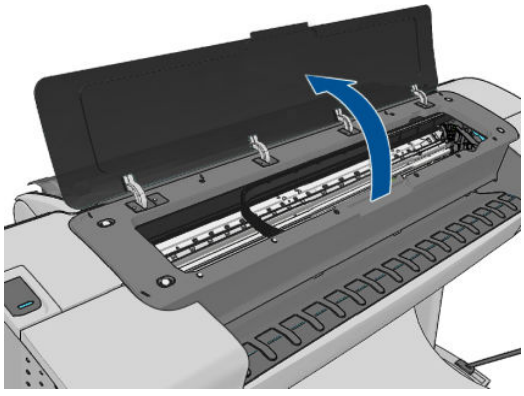

b. Manually move the carriage to another position. The carriage should not offer resistance to manual movement. Do not force any product part while moving the carriage. The Touch Control Panel will show a text describing the action and an animation as an example of the requested operation. Press OK when you have finished moving the carriage.

c. Close the Scanner or Window.

5. Afterwards, the test will automatically continue checking for possible Scan Axis errors. The carriage will move automatically along the Scan Axis several times, taking a few minutes. As the test executes, the Touch Control Panel displays the following messages:

- Checking paper jam
- Checking movement
- Checking life counters status

6. If the Scan Axis passes the test, the Touch Control Panel displays the following message, otherwise it displays an error code. Press OK to continue.

Cutter test

The Cutter is designed to cut roll paper after printing to the defined sheet size. Before executing this test you should run the Scan Axis, Media Drive and Carriage tests to ensure that each of these subsystems is operating correctly.

Perform the Scan Axis - Cutter test as follows.

1. In the Diagnostics menu, select Scan Axis.

2. The Touch Control Panel will display the following screen, select **Cutter**.

3. The following screen is displayed, check that the paper is unloaded and all the covers are closed, and select **OK**.

If there is a failure at any point during the tests, the Touch Control Panel will display the relevant system error code. To troubleshoot the displayed error code, see System Error Codes—Full Descriptions on page 78.

4. The following screen is displayed. With the Media Lever lowered, feed a roll of paper (not a sheet) into the paper path until it reaches the product roller. Then press **OK** to continue.

If you have not fed enough paper into the product, the diagnostic will show a message saying that the paper was not detected and the test will fail and the product will reboot. In this case, try again, taking care to feed more paper. If the problem continues, check that the sensors are working correctly. If necessary, perform the Sensors Test (see Sensors Test on page 144).

5. The product then starts an actual test cut of the paper. As the test executes the Touch Control Panel displays the following messages:

   - Advancing paper
   - Preparing cutter
   - Cutting paper
   - Disengaging cutter

6. Once the test has completed the Touch Control Panel displays the test result and prompts you to confirm that the cutter worked.

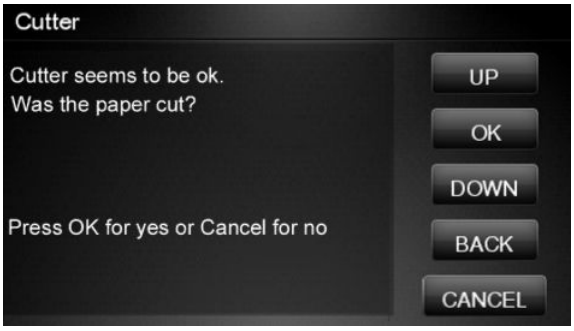

7. Press **OK** if the cutter worked or **Cancel** if the cutter did not work.

8. Press **OK** to end the test and restart the product.

Paper Drive Test

The Paper Drive test diagnoses failures of components of the Paper Axis.

You must perform the Paper Drive Test after:

- System Error Code 81:XZ.
- System Error Code 41:XZ.
- System Error Code 73:XZ.

Diagnostic tests also need to be performed after removing or replacing certain product components. If you have removed or replaced product components, check the Service Calibration Guide to Removal and Installation on page 267 to see which tests and calibrations you need to perform.

CAUTION: ALL THE COVER SENSORS ARE DISABLED WHEN IN THE SERVICE TESTS MENU. IF THE CARRIAGE IS MOVING IT WILL NOT STOP IF THE SCANNER IS OPEN, SO BE VERY CAREFUL NOT TO PUT YOUR HANDS INSIDE.

NOTE: IF POSSIBLE ALWAYS PERFORM THIS TEST BEFORE REPLACING ANY COMPONENT OF THE MEDIA-AXIS.

Perform the Paper Drive test as follows:

NOTE: Perform this test with the Printheads and the Tubes System installed in order to get values that can be compared correctly.

1. In the Diagnostics menu, select **Paper Drive**.

2. The Touch Control Panel displays the following screen, select OK to continue with the process. Unload paper if loaded, and select OK again.

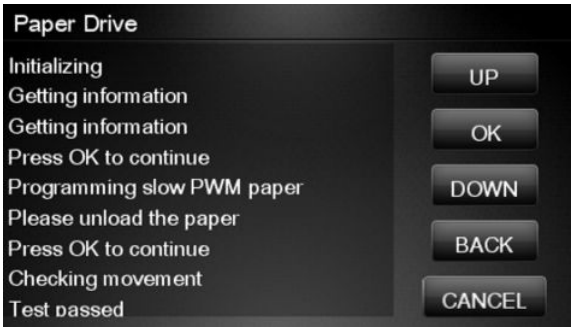

3. The Touch Control Panel then displays the Analog Encoder calibration results.

The GAIN for channels A and B should be lower than 5.

4. If the results are correct, press OK to accept the results. If the results are not correct, press Cancel to reject the results and fail the test.

5. If you accept the results, the Touch Control Panel will continue with the tests. It will ask you to press OK to continue with the process. When prompted, unload paper if any is loaded.

6. The Touch Control Panel then displays the test results.

- The first PWM avg result (forward move) should be between 7700 and 10560 and the second Pwm avg (backward move) between 7600 and 10450.
- The first Speed error result should be no more than 78.65 and the second no more than 112.5.
- The first PWM StDev result should be no more than 162.5 and the second no more than 187.5.
- The first PWM max result should be no more than 12250 and the second no more than 12125.

7. If the results are correct, press **OK** to accept the results. If the results are not correct, press **Cancel** to reject the results and FAIL the test.

8. If you accept the results, the Touch Control Panel shows the following screen, press **OK** to finish.

Electronics Module Test

The purpose and scope of this test is different when compared to some of the other HP Designjet products of the same platform. This procedure tests only the formatter, as the other subsystems such as the PSU or Engine PCA are tested during the Initialization of the product every time the unit is switched on.

The purpose of this test is to diagnose a failure in the operation of the Formatter. The information shown in the Touch Control Panel is:

- The memory size
- Type and size of the partitions on the Hard Disk
- Size and percentage used of the data and boot partitions on the Hard Disk.

Perform the Electronics Module test as follows:

1. In the Diagnostics menu, select **Electronics Module**.

2. The Touch Control Panel then prompts you to test the Formatter, press OK.

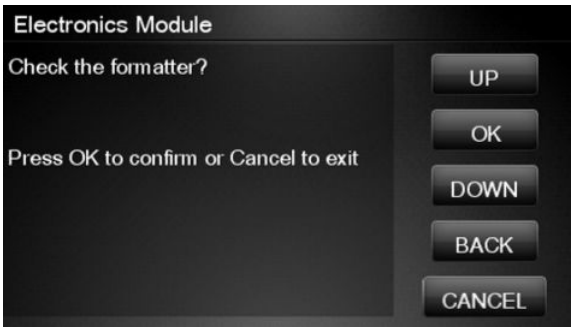

3. The Formatter memory size test starts and the Touch Control Panel displays the following messages:
   - Getting information
4. The Touch Control Panel then displays the Formatter memory size.

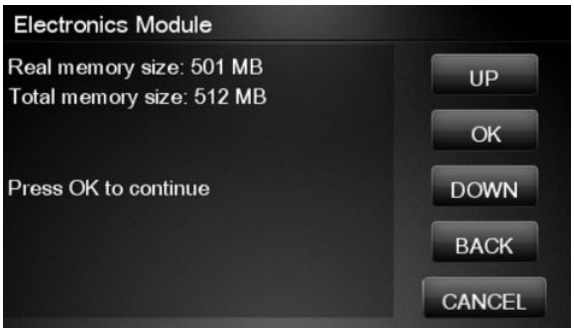

5. Press OK to continue.
6. The Formatter hard disk test starts and the Touch Control Panel displays the following messages:
   - Getting information
7. The Touch Control Panel then displays Formatter Hard Disk information test results.

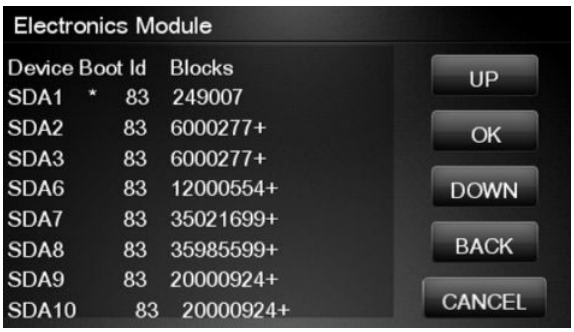

8. Press any key to continue.
9. The Formatter hard disk file information test starts and the Touch Control Panel displays the following messages:
   - Getting information

10. The Touch Control Panel then displays Formatter Hard Disk File information test results.

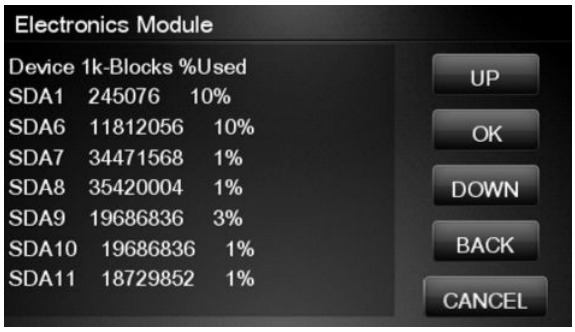

11. Press any key to continue.

12. If the test is successful, the Touch Control Panel displays the following message.

13. Press **OK** to end the test and restart the product.

Carriage Assembly Test

The Carriage Assembly test diagnoses failures of any components of the Carriage. This test should be run in any of the following circumstances.

- Before replacing the Carriage Assembly.
- After removing or replacing certain product components. If you have removed or replaced product components, check the Service Calibration Guide to Removal and Installation on page 267 to see which tests and calibrations you need to perform.
- If printhead alignment fails repeatedly.
- If, when loading paper, the search for the edge of the paper fails repeatedly.
- If no printheads are detected (check more than one).
- If the system error message 02.1:10 appears.

If an error is detected during the test, the Touch Control Panel will display an error code and message. The test will not continue after that point.

1. In the Diagnostics menu, select **Carriage Assembly**.

2. The test starts and the Touch Control Panel displays the following messages:
   - Initializing
   - Getting information
   - Checking voltages
3. It will then display the actual values of various parameters, together with their permitted (valid) range. In each case, press OK to continue with the test.
4. Partway through the test, the Touch Control Panel asks you to remove the printheads.

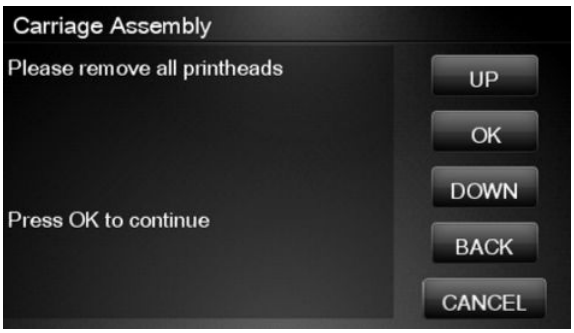

5. Open the Scanner (MFP only) or Window.

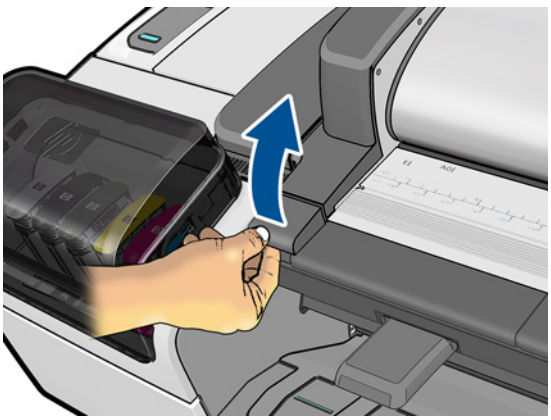

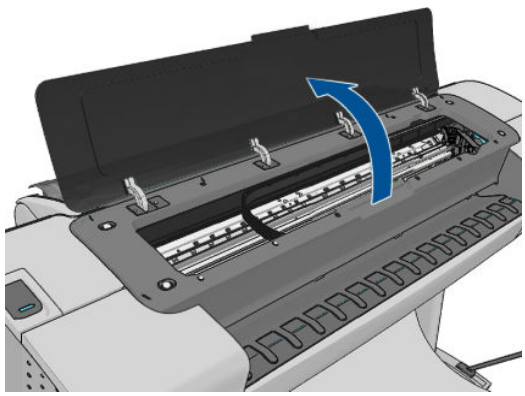

6. Open the Carriage Cover.
7. Remove all the printheads from the Carriage.
8. Close the Carriage Cover.

9. Close the Scanner (MFP only) or Window.
10. Press **OK** to continue.

NOTE: If the Touch Control Panel reports that a printhead is still detected in the product, remove the printhead. If you are sure that you have already removed all the printheads, press **Cancel** to continue the test.

11. The test continues, displaying the values and valid ranges of some more parameters.
12. The Touch Control Panel then prompts you to load roll paper.

13. Load roll paper.

NOTE: For the LED test to work properly, the paper must be loaded completely through the carriage path.

14. Press **OK** to continue or **Cancel** to exit.
15. The product tests the carriage LEDs and sensors, which may take a few minutes.

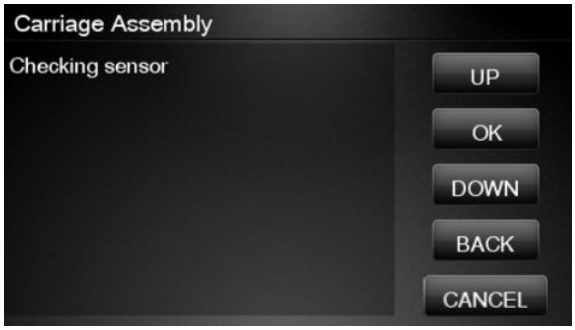

16. The Touch Control Panel then asks you to re-insert all the printheads that you removed earlier.

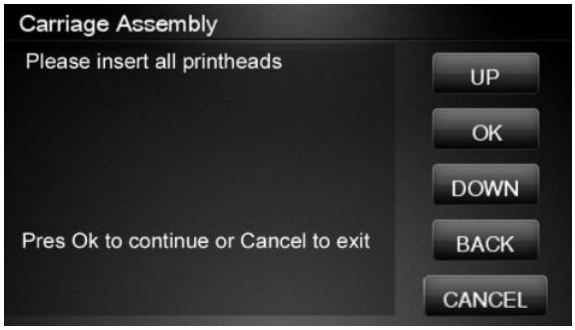

17. Open the Scanner (MFP only) or Window.

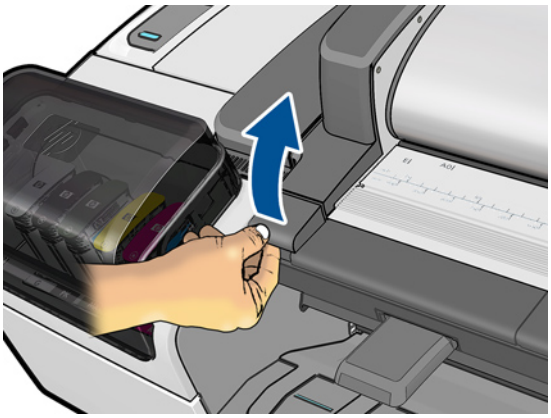

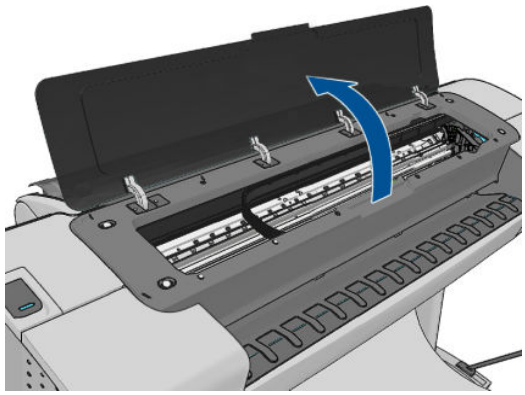

18. Open the Carriage Cover.
19. Insert all the printheads.
20. Close the Carriage Cover.
21. Close the Scanner (MFP only or Window.
22. Press **OK** to continue.

NOTE: If the Touch Control Panel reports that a printhead is not detected in the product, insert the printhead. If you are sure that you have already inserted all the printheads, press **Cancel** to continue the test.

23. The product makes some further checks. If all is well, the Touch Control Panel displays the following message.

24. Press **OK** to end the test.

Sensors Test

The Sensors test diagnoses failures of any sensors of the product. Always run this test before replacing any of the following sensors:

- Scanner Position sensor (MFP only)
- Media Lever position sensor
- Media sensor

- Upper or lower roll cover sensor
- Single-sheet sensor

Diagnostic tests also need to be performed after removing or replacing certain product components. If you have removed or replaced product components, check the Service Calibration Guide to Removal and Installation on page 267 to see which tests and calibrations you need to perform.

1. In the Diagnostics menu, scroll to **Sensors** and press on this menu option.

2. The Sensors test starts and the Touch Control Panel prompts you to check default sensor positions. For the T770 series, the cover sensors are not present and not tested.

Check that the sensors are in the default positions and press **OK** to continue.

NOTE: If the product detects any sensor in a position that is not expected, a message will be shown. If the sensor is in the correct position, there must be a problem with the sensor (for example, the Scanner is closed but the message indicates that it is not closed); in this case, replace the faulty sensor.

3. The Scanner Position sensor test starts and the Touch Control Panel prompts you to open the Scanner (MFP only).

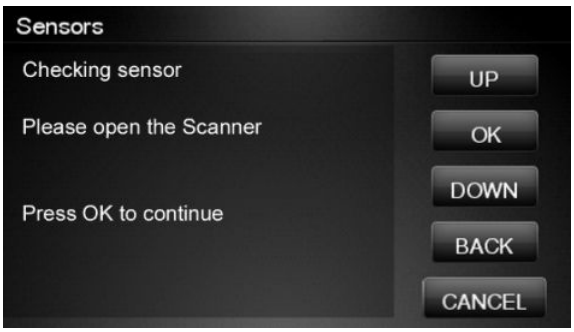

Open the Scanner and press **OK** to continue.

NOTE: Make sure that no object is interfering with the sensor.

4. The Touch Control Panel prompts you to close the Scanner, if the sensor detects the scanner closing the following screen is displayed.

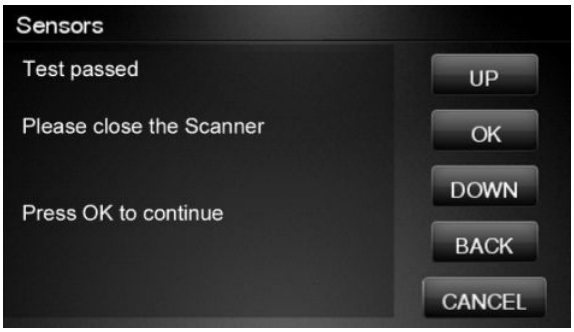

Close the Scanner and press **OK** to continue.

5. Follow the same procedure for the Pinchwheel Lever Sensor, the Media Sensor, and the Roll Covers.

   To test the Media Sensor, you will have to feed paper into the product until it reaches the sensor.

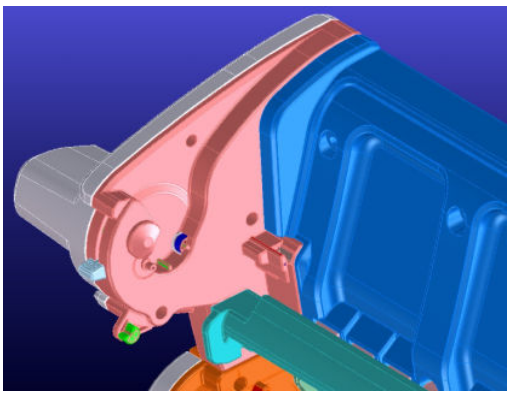

6. The Touch Control Panel asks you to remove the paper.

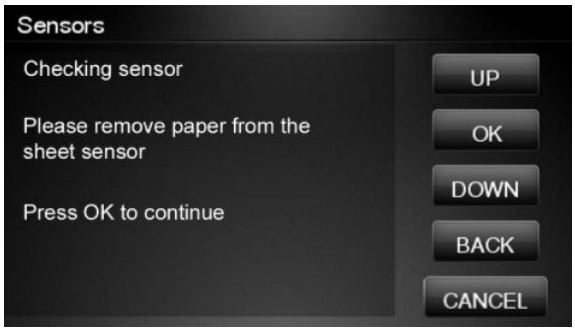

When you have removed the paper, press **OK** to continue.

7. The Touch Control Panel may ask you to reinsert the paper.

8. When the tests are complete, the Touch Control Panel displays a final message. Press **OK** to continue.

Rewinder Test

The Rewinder test diagnoses failures of the Rewinder located in the Rear Paper Path Assemblies. Always run this test before replacing the Right Roll Support.

Perform this test after:

- System Error Code 41:YZ
- System Error Code 45:YZ
- System Error Code 81:YZ

Diagnostic tests also need to be performed after removing or replacing certain product components. If you have removed or replaced product components, check the Service Calibration Guide to Removal and Installation on page 267 to see which tests and calibrations you need to perform.

NOTE: Perform this test with the Printheads and the Tubes System installed in order to get values that can be compared correctly.

CAUTION: ALL THE COVER SENSORS ARE DISABLED WHEN IN THE DIAGNOSTICS MENU. IF THE CARRIAGE IS MOVING IT WILL NOT STOP IF THE SCANNER IS OPENED, SO BE VERY CAREFUL NOT TO PUT YOUR HANDS INSIDE.

1. In the Diagnostics menu, scroll to **Rewinder** and press on this menu option.

The product will start the Open Loop, Rewinder Servo System, and Media Driver PWM tests.

If there is a failure at any point during the tests, the Touch Control Panel will display the relevant **System Error Code**. To troubleshoot any displayed error codes, see System Error Codes—Full Descriptions on page 78.

2. The Rewinder test starts and the Touch Control Panel displays the following messages:
   - Initializing
   - Getting information
   - Part Number: P/N
   - Setting encoder position
3. The Touch Control Panel prompts you to make sure the paper is unloaded and the spindles are removed.

4. Remove the paper from the product.
5. Remove the spindles from the roll supports.
6. Press **OK** to continue.
7. The Touch Control Panel displays the results.

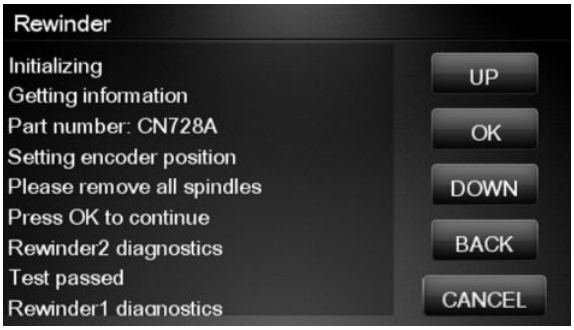

8. The Touch Control Panel displays the test results. Press **OK** to end the test and restart the product.

NOTE: Once you have completed the Rewinder diagnostic test, you must perform a Paper Advance Calibration. Paper Advance Calibration on page 208.

Ink Delivery System (IDS) Test

The complete Ink Delivery System test consists of three individual tests for the different components related to this subsystem. These three tests and their associated functions are:

- Ink Delivery System
  - Check the Ink Supply Station subsystem.
  - Show tubes usage (as a percentage of expected life).
  - Test communication with Ink Supplies.
- Check Ink Supplies
  - Test communication with Ink Supplies.
  - Show ink levels.
  - Check that Ink Supplies are ready for purging: the remaining ink is enough for the setup process and the ink supply is not faulty.
- Check Leakage
  - Check the Ink Supply Station subsystem.
  - Check for ink supplies or tubes leakage.

Diagnostic tests also need to be performed after removing or replacing certain product components. If you have removed or replaced product components, check the Service Calibration Guide to Removal and Installation on page 267 to see which tests and calibrations you need to perform

Ink Delivery System

If there is a failure at any point during the tests, the Touch Control Panel will display the relevant **System Error Code**. To troubleshoot any displayed error codes, see System Error Codes—Full Descriptions on page 78.

1. In the Diagnostics menu, scroll to **IDS** and press on this menu option.

2. The Touch Control Panel shows the **IDS** submenu.

3. In the **IDS** submenu, scroll to **Ink Delivery System** and press **OK** to start the test.
4. The Ink Delivery System test starts and the Touch Control Panel prompts you to remove all the Ink Supplies.

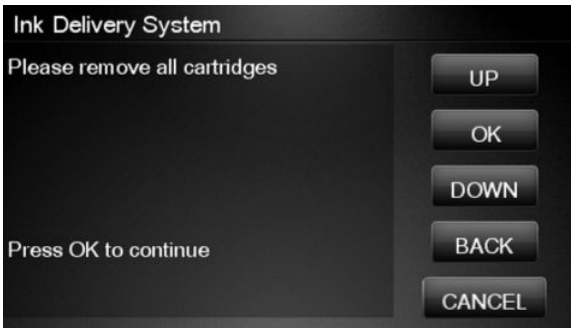

5. Remove all the Ink Cartridges.
6. Press **OK** to continue.

7. The Touch Control Panel then prompts you push down Piston 0.

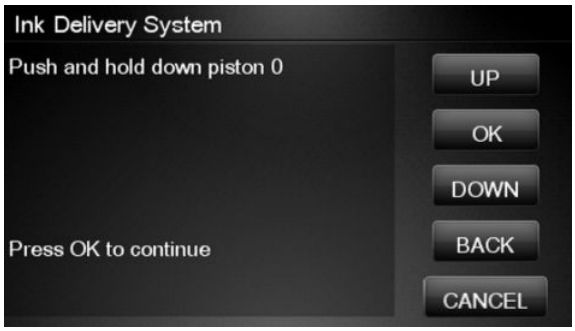

8. Press and hold down Piston 0, which is located at the furthest left Ink Cartridge position.
9. Press OK.
10. The Touch Control Panel then prompts you to release Piston 0.

11. Release Piston 0.
12. Press OK to continue.
13. Repeat the steps above for each piston.
14. The Touch Control Panel then displays the tubes usage, expressed in percentage of the expected subsystem life.

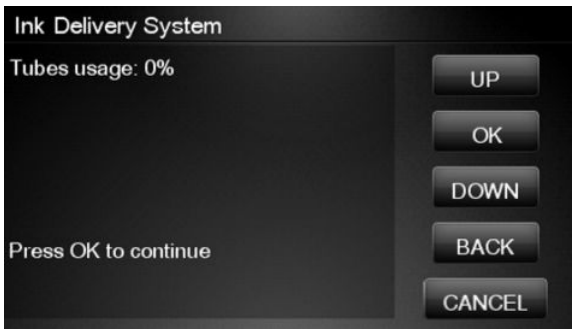

15. Press OK to continue.

16. The Touch Control Panel prompts you to insert all the Ink Cartridges.

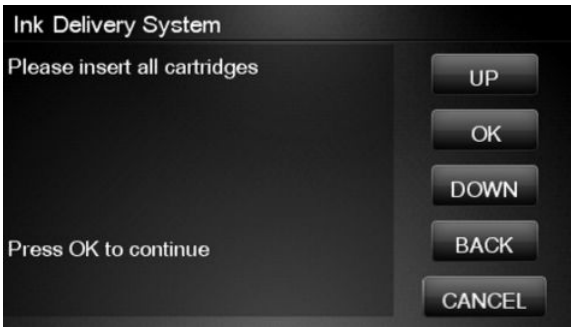

17. Install all the Ink Cartridges.
18. Press **OK** to continue.
19. The Touch Control Panel then displays Acumen Supplies test results.

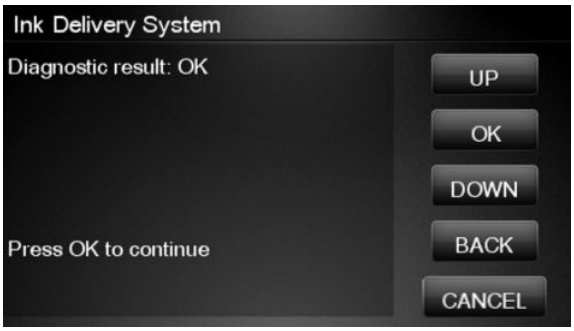

20. Press **OK** to end the test and return to the Diagnostics menu.

Check Ink Supplies

If there is a failure at any point during the tests, the Touch Control Panel will display the relevant **System Error Code**. To troubleshoot any displayed error codes, see System Error Codes—Full Descriptions on page 78.

1. In the Diagnostics menu, scroll to **IDS** and press on this menu option.

2. The Touch Control Panel shows the **IDS** submenu.

3. In the **IDS** submenu, scroll to **Check Ink Supplies** and press **OK** to start the test.
4. The Touch Control Panel prompts you to insert all the ink cartridges.

5. The Touch Control Panel shows the ink levels of all the cartridges. A list of the “colors not valid” for purge are shown below. If all of the cartridges are valid for purging, the “Colors not valid” item will not be shown on the Touch Control Panel.

6. Press **OK** to exit.

7. The Touch Control Panel then displays the test results.

8. Press OK to end the test and return to the Diagnostics menu.

Check Leakage

If there is a failure at any point during the tests, the Touch Control Panel will display the relevant **System Error Code**. To troubleshoot any displayed error codes, see System Error Codes—Full Descriptions on page 78.

1. In the Diagnostics menu, scroll to **IDS** and press on this menu option.

2. In the **IDS** submenu, scroll to **Check Leakage** and press **OK** to start the test.

3. The Ink Delivery System test starts and the Touch Control Panel prompts you to remove all the Ink Cartridges.

4. Remove all the Ink Cartridges and press OK to continue.

5. The Touch Control Panel prompts you to push down all the pistons.

6. Use your fingers to push all of the pistons down, and press OK to continue.

7. If the Ink Supply Station is working properly, the Touch Control Panel prompts you to insert all the Ink Cartridges.

8. Install all the Ink Cartridges and press OK to continue.

9. The leakage check starts and the Touch Control Panel displays the remaining time until the leakage check is finished.

10. The Touch Control Panel then displays Check Leakage test results.

11. Press **OK** to end the test and return to the Diagnostics menu.

Service Station Test

The complete Service Station test consists of individual tests for the different components related to this subsystem.

These tests are:

- Service Station
- Primer Motor

Diagnostic tests also need to be performed after removing or replacing certain product components. If you have removed or replaced product components, check the Service Calibration Guide to Removal and Installation on page 267 to see which tests and calibrations you need to perform.

Service station

1. In the Diagnostics menu, scroll to **Service Station** and press on this menu option.

2. The Touch Control Panel will show the **Service Station** submenu.

3. In the **Service Station** submenu, scroll to **Service Station** and press **OK** to start the test.
4. The Touch Control Panel then prompts you to check the status of the product.

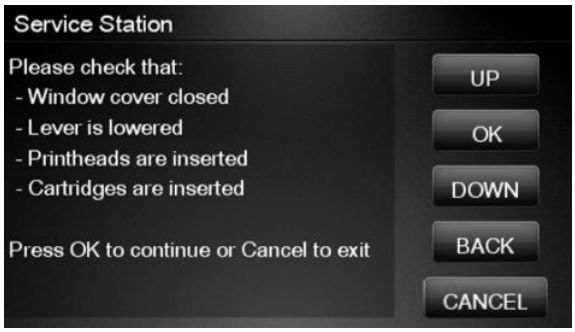

5. Check that:
   - The Scanner is closed.
   - The Media Lever is lowered.
   - All Printheads are inserted.
   - Valid Cartridges are inserted.
6. Press **OK** to continue.

7. The product performs a series of movements numbered from 1 to 10. It takes about a minute to perform all movements.

8. The Touch Control Panel then asks if you want to cap the printheads.

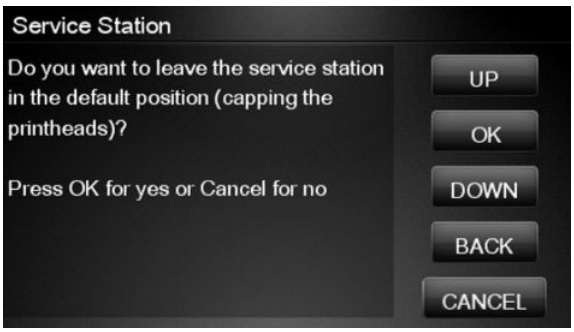

9. Press **OK** to cap the Service Station or **Cancel** to skip this test.

10. The Touch Control Panel prompts you to shut down the product to complete the test.

11. Press **OK** to shut down the product.

TIP: If a system error message is displayed during the procedure, follow the procedure described in the System Errors section. A system error 21 indicates that the service station is not working properly.

Primer motor

1. In the Diagnostics menu, scroll to **Service Station** and press on this menu option.

2. The Touch Control Panel will show the **Service Station** submenu.

3. In the **Service Station** submenu, scroll to **Primer Motor** and press **OK** to start the test.
4. The Touch Control Panel then prompts you to check the status of the product.

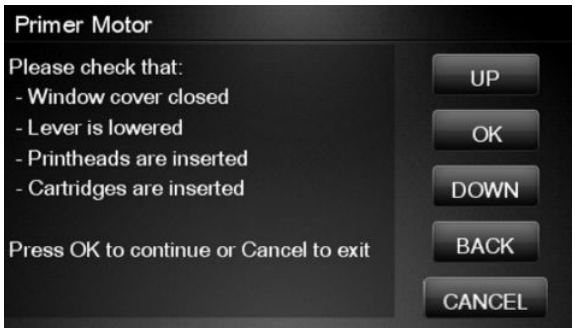

5. Check that:
   - The Scanner is closed.
   - The Media Lever is lowered.
   - All Printheads are inserted.
   - Valid Cartridges are inserted.

6. The product performs two movements. Then a screen is shown where the zero position sensor is checked. It is a sensor that detects when the primer is in the zero position. The initial value for the sensor is shown. Then the primer motor is moved until a changed is shown in current value.

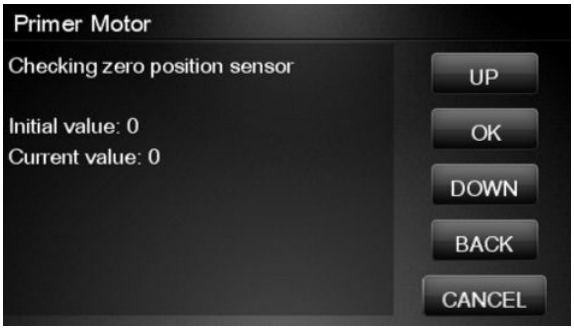

7. The product performs a series of movements to test the primer.

8. If the test passes, the product purges the tubes. This process takes about a minute.

9. The Touch Control Panel prompts you to shut down the product to complete the test.

10. Press OK to shut down the product.

I/O Information Utility

The I/O Information utility retrieves the TCP/IP Network configuration parameters from the product.

NOTE: In some cases, particularly after resetting the product to factory defaults, it may take as long as 5 minutes to obtain an IP configuration.

1. In the Diagnostics menu, scroll to **I/O Information** and press on this menu option.

2. The Touch Control Panel displays the I/O Information.

3. Press **OK** to finish.

Enable I/O Interfaces Utility

This utility is used to enable/disable the USB and LAN connections.

1. In the Diagnostics menu, scroll to Enable I/O Interfaces and press on this menu option.

2. The Touch Control Panel prompts you to enable the connectivity. Press OK to confirm or, UP or Down to change the option YES or NO.

3. The connectivity is enabled if YES option is confirmed. Press OK to restart.

Unit Information Utility

1. The Unit Information test retrieves the Firmware Version, Serial Number and Part Number of the product.
2. In the Diagnostics menu, scroll to **Unit Information** and press on this menu option.

3. The Unit Information test starts and the Touch Control Panel displays the following message:
   - Initializing
   - Getting information

4. The Touch Control Panel displays the firmware level, serial number of the product and the part number.

5. Press **OK** to continue and return to the menu.

EEROM Reset Utility

The EEROM Reset test resets the product to the factory defaults and delete any user information/files.

1. In the Diagnostics menu, scroll to **EEROM** and press on this menu option.

2. The EEROM Reset test starts and the Touch Control Panel asks whether you want to continue.

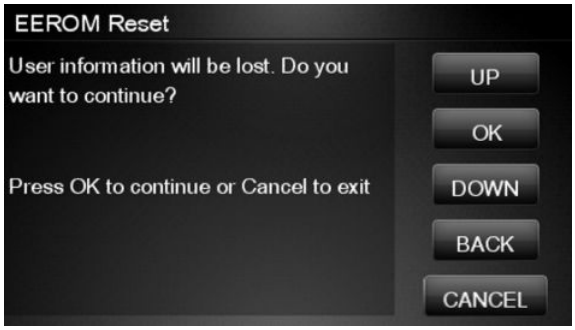

3. Press **OK** to continue the test or **Cancel** to cancel it.
4. The EEROM Reset test continues and the Touch Control Panel displays the following message:
   - Initializing
   - Setting default configuration

5. The Touch Control Panel prompts you to shut down the product to complete the test.

6. Press OK to shut down the product.

CryptoAsic PCA Utility

This utility enables to check the CryptoAsic PCA or to install a new part.

1. In the Diagnostics menu, scroll to T0B51-60014 (CryptoAsic PCA Utility) and press on this menu option.

2. Select **Install part** and press **OK**.

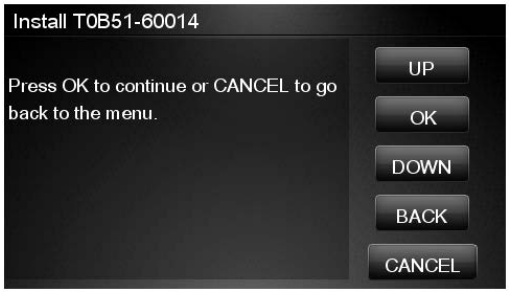

Once the process finishes, the printer will show a message indicating if the CryptoAsic PCA has been installed properly **(OK)** or not **(FAIL)**.

In both cases, to end the process, the printer needs to be shut down. Press **OK** to proceed.

3. To check if the CryptoAsic PCA is working correctly, select the option **Check part** and press **OK**.

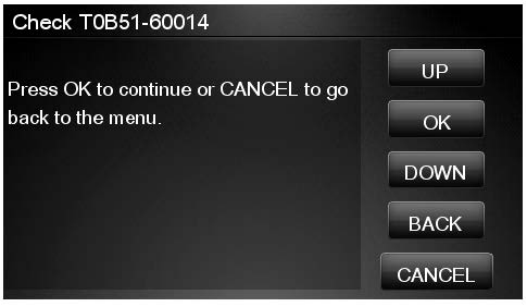

If the CryptoAsic PCA is properly installed and works with no problem, the printer will show the message **OK**. If there is any problem with this part, the printer will show a **FAIL** message.

After the check, the printer needs to be shut down. Press **OK** to proceed.

Touch Control Panel Lock Reset

This utility enables the Touch Control Panel to be unlocked when it has been locked by mistake and cannot be remotely unlocked from Web JetAdmin.

1. In the Diagnostics menu, scroll to **Touch Control Panel lock reset** and press on this menu option.

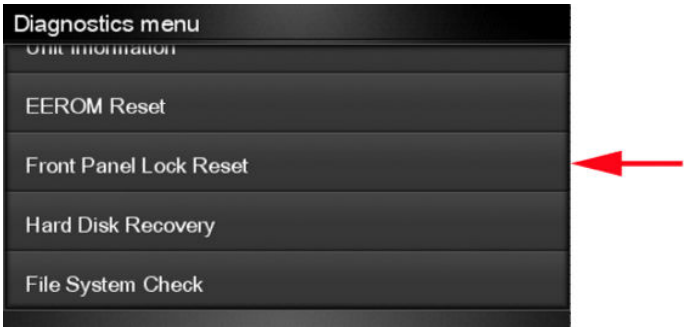

2. The Touch Control Panel prompts you to unlock Touch Control Panel access. Press **OK** to unlock access or **Cancel** to exit.

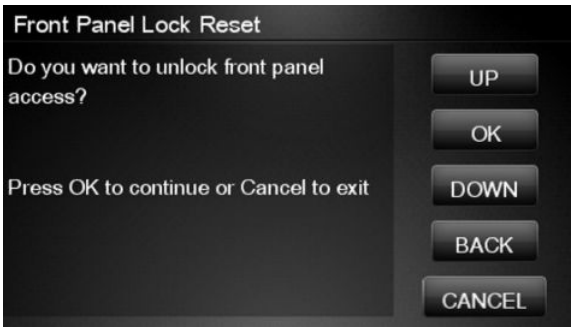

3. The Touch Control Panel lock is reset. Press **OK** to end the utility and return to the main menu.

Hard Disk Recovery Utility

The Hard Disk Recovery utility erases the hard disk and restores the factory firmware. This option is also available from the Service Menu.

1. In the Service Utilities submenu, select **Hard Disk Recovery** and press this menu option.

2. The Touch Control Panel reminds you to unload the paper.

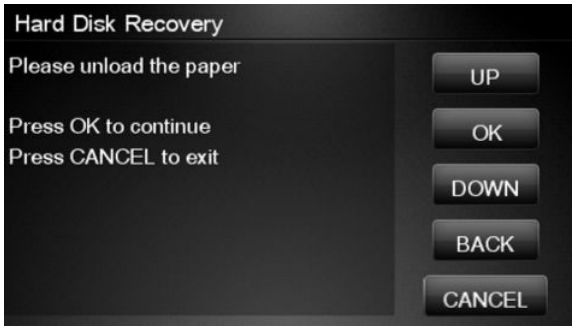

3. Press **OK** to proceed or **Cancel** to exit.

   If you press **OK**, the product begins to erase the hard disk and restore the factory firmware; it restarts automatically during this process. The Touch Control Panel displays a progress bar.

⚠ CAUTION: Do not try to interrupt this process. All Touch Screen Panel keys are disabled until it has finished.

File System Check

The File System Check checks the file system on the hard disk and automatically corrects any problems that it finds. This option is also available from the Service Menu.

1. In the Diagnostics menu, select **File System Check** and press on this menu option.

2. The Touch Control Panel asks you if you want to proceed with the File System Check.

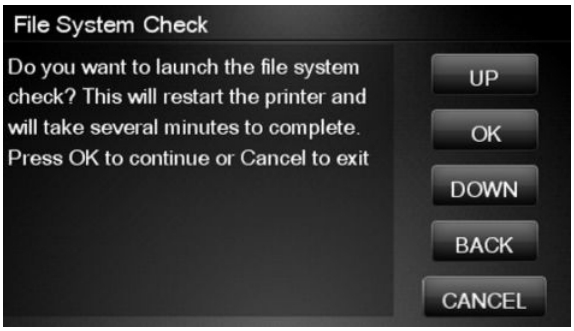

3. Press **OK** to proceed or **Back/Cancel** to exit.

   If you press **OK**, the product restarts and the File System Check is performed.

4 Service Menu

- Introduction
- Service Utilities
- Service Calibrations

Introduction

This chapter explains the product's internal Service Utilities and Calibrations, available from the Service Menu.

Service Utilities

The following is a list of all internal Service Utilities available in the product. To access them, see Entering the Service Utilities Menu on page 170.

Turn Drive Roller on page 172

Purge Tubes on page 173

Reset Life Counters on page 175

- Reset Maintenance Kit usage
  - Reset life counters PMK1
  - Reset life counters PMK2
  - Reset life counters PMK3 (if applies)
- Reset usage counters

Diagnostic Print on page 178

- Image Quality Service Best
- Image Quality Service Normal
- Advanced Diagnostic Print
  - Paper advance
  - Printhead alignment
  - Nozzle health
  - Force drop detection

Set Date and Time on page 179

Enable/Disable Firewall on page 180

Enable/Disable Sleep Mode on page 181

Disk Wipe DoD 5220.220M on page 182

Sanity level

Insecure mode

1-pass mode

5-pass mode

Disk Wipe (DOD 5220.220M)

Hard Disk Recovery Utility on page 184

Show/Hide Touch Control Panel Information on page 185

Enable/Disable Port 280 on page 186

File System Check on page 187

I/O Tests on page 188

Rewinder Adjust on page 190

Adjust Rewinder 1

Adjust Rewinder 2

Disable Upper Roll Cover on page 191

Enable Upper Roll Cover on page 192

Special Cutter Mode on page 193

Scanner Validation on page 193

Adjustment scanner Y-Axis scale on page 201

Reset Access Control on page 205

Uninstall Applications on page 205

Accounting Mode on page 205

Entering the Service Utilities Menu

1. From the Home Screen press the Information icon on the top left corner of the screen. For information regarding the Touch Control Panel keys, see Using the Touch Control Panel (MFP only) on page 2 or .
2. From the product Information Area, press the Main Menu / tool icon on the bottom right corner of the screen.

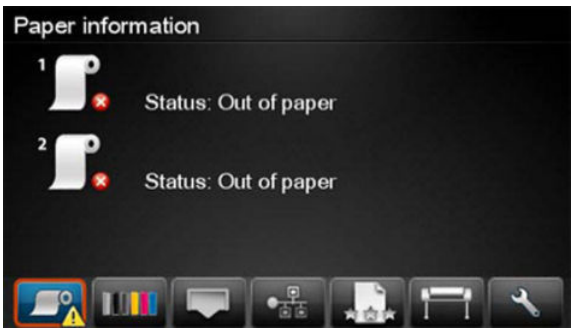

3. Scroll down to the lowest menu option and press on the **Service menu** option.

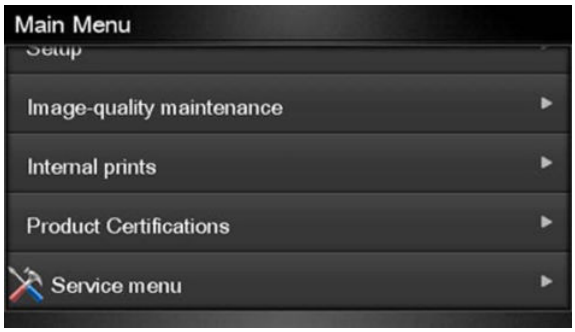

4. Enter the 4-digit 1st level access code “3174” and press **OK**.

5. Press on the **Service utilities** menu option.

6. From the **Service utilities** menu you can scroll up and down the available utilities. Press on the selected menu option.

Turn Drive Roller

The purpose of this Service Utility is to rotate the Drive Roller and the Overdrive in order to clean them.

NOTE: Remove the media from the product before proceeding with the procedure.

Perform the Turn Drive Roller utility as follows:

1. Remove Media from the paper path.
2. Remove the Right Scanner Cover (MFP only) on page 467.
3. Open the Scanner (MFP only) or Window.

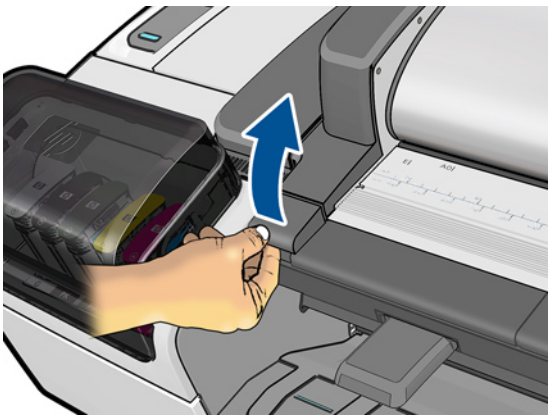

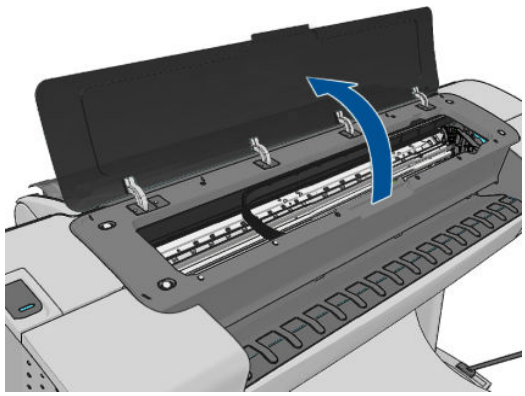

4. Place a strip of tape of the actuator of the Scanner Position Sensor (MFP only).

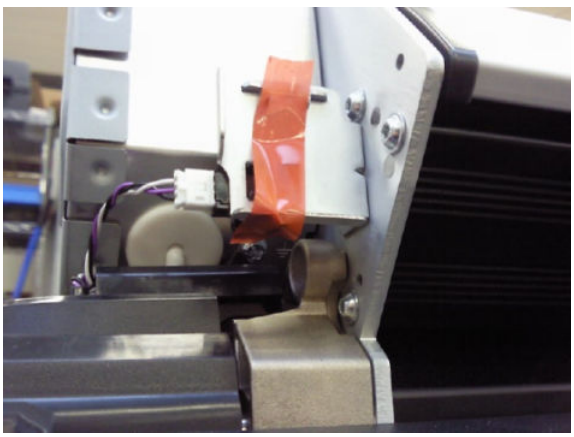

NOTE: Care should be taken when removing the tape from the actuator after the procedure is complete, as the part can be broken.

5. In the Service Utilities submenu, scroll to **Turn Drive Roller** and press on this menu option.

6. The test begins and the Touch Control Panel displays the following message:
   - Checking Media Presence Sensor
7. If paper is loaded, the service utility will be cancelled. In this case, unload the paper and start again from **step 1**. If no paper is loaded, the test will continue.
8. The Drive Roller begins to turn slowly and the following message is displayed on the Touch Control Panel:

9. To clean the drive roller and overdrive, see Cleaning the Drive Roller and Overdrive on page 543.
10. Once you have finished cleaning the Drive Roller and the Overdrive, press the **Cancel** key to stop the roller.

NOTE: REMEMBER TO REMOVE THE PIECE OF PAPER FROM THE SCANNER POSITION SENSOR BEFORE CLOSING THE SCANNER AS THIS COULD DAMAGE THE SENSOR.

Purge Tubes

The purpose of this Service Utility is to Prime the Tubes when the Ink Tubes are **not** new and they need to be re-primed or automatic priming was not completed correctly.

NOTE: Make sure that NEW Ink Cartridges are installed or that the ink volume remaining in the Ink cartridges is above 88% before starting to prime the tubes. If you do not comply, you will get a warning message and cannot finish the test.

NOTE: Before using the Purge Tubes utility, you must insert the dummy printheads using the Change Printheads procedure.

Once you have inserted the dummy printheads using the Change Printheads procedure, perform the Purge Tubes utility as follows:

1. In the Service Utilities submenu, scroll to Purge Tubes and press on this menu option.

2. The Touch Control Panel prompts you to confirm that the dummy printheads are correctly inserted. If the dummy printheads are correctly inserted, press OK.

NOTE: If you have not inserted the dummy printheads, press BACK or CANCEL to exit the test. Insert the dummy printheads using the Change Printheads procedure.

3. The Touch Control Panel displays a message to say the product is going to reboot.

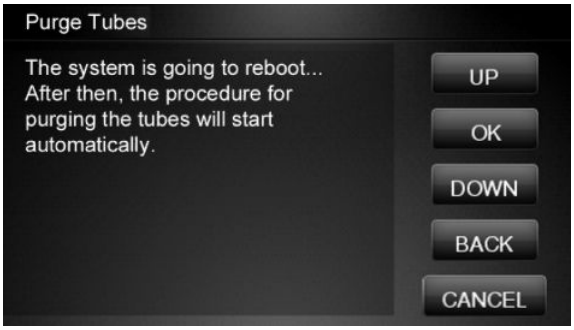

4. Once the tubes system has been purged, the following message will instruct you to open the Carriage to access the printheads:

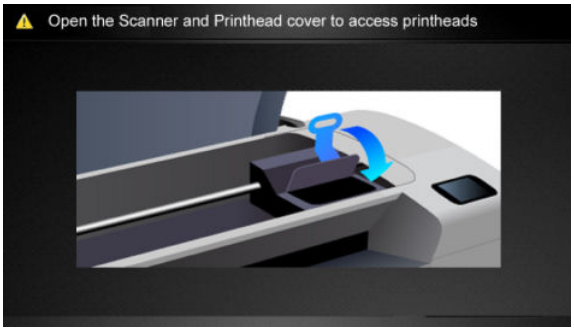

5. Once you have opened the carriage cover, the Touch Control Panel prompts you to check that the Setup Printheads contain ink. If the Ink Supply Tubes have been primed correctly, the windows will contain ink. If the windows on top of each Setup Printhead do **not** contain ink, then you may need to repeat the Prime Tubes process from the beginning.
6. If all the Setup Printheads contain ink, select **All with some ink**. If one or more of the Setup Printheads do **not** contain ink, select **Not all with ink.**
7. The Touch Control Panel then prompts you to remove the Setup Printheads and install the Printheads.
8. Remove **all** the Setup Printheads from the Carriage and install the previously removed Printheads.
9. Once **all** the Printheads are installed, the Touch Control Panel will instruct you to close all the covers.
10. The product will now perform the Printhead Alignment and Touch Control Panel will prompt you to continue with the Printhead Alignment, select **Align now** and press the **OK** key.
11. Once the Printhead Alignment is completed, the following message will be displayed on the Touch Control Panel. Press the **OK** key to continue.

Reset Life Counters

The purpose of this Service Utility is to reset the internal life counters.

There are two submenus that allow you to:

- Reset **all** the counters related to a Preventive Maintenance Kit (PMK).
- Reset only the counters related to a specific replaced part.

NOTE: ALWAYS RESET THE LIFE COUNTER OF A CORRESPONDING PART AFTER REPLACING IT.

Perform the Reset Life Counters utility as follows:

1. In the Service Utilities submenu, scroll to **Reset Life Counters** and press this menu option.

2. Enter the 4-digit 2nd level access code “5494” and press **OK**.

3. Select **Reset Maintenance Kit usage** to reset the Life Counter for **all** parts included in a Preventative Maintenance Kit (PMK).

You can choose from the following Preventive Maintenance Kits:

- Preventive Maintenance Kit 1 (PMK1). See Preventive Maintenance Kit #1 for T790 24-in (CQ305–60017) on page 551, Preventive Maintenance Kit #1 for T790 44-in Models, T795, T1300 and T2300 (CH538-67024) on page 552, Preventive Maintenance Kit #1 for Z5400 (E1L21-67015) on page 552, Preventive Maintenance Kit #1 for Z2600 (T0B52-67016) on page 552 or Preventive Maintenance Kit #1 for Z5600 (T0B51-67008) on page 553 depending on the printer model.
- Preventive Maintenance Kit 2 (PMK2). See Preventive Maintenance Kit #2 for T790, T795, T1300 and T2300 (CH538-67040) on page 552, Preventive Maintenance Kit #2 for Z5400 (E1L21-67006) on page 552 or Preventive Maintenance Kit #2 for Z2600, Z5600 (T0B51-67023) on page 553 depending on the printer model.
- Preventive Maintenance Kit 3 (PMK3). See Preventive Maintenance Kit #3 for Z2600, Z5600 (Q5669-60722) on page 553.

NOTE: For more information about the counters that are reset, See Preventive Maintenance on page 543.

It is also advisable to check the status of the Life Counters related to the other Preventive Maintenance Kits to avoid multiple trips to the customer.

4. Select **Reset usage counters** to reset the Life Counter of a single part.

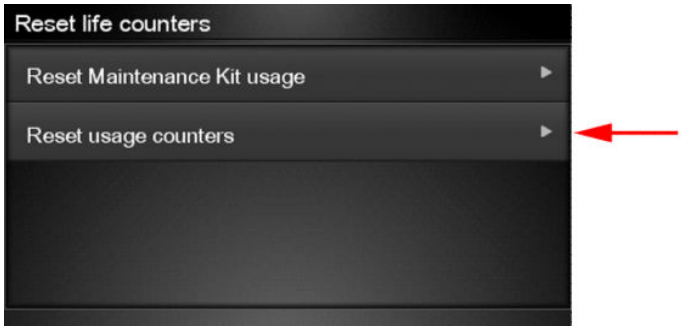

- Tubes and Trailing Cable
- Scan-Axis Belt
- Scan Motor
- Left Spittoon
- Right Spittoon
- Full Bleed Foams
- Carriage
- Service Station
- Scanner Counters
- Cutter

If you replace a part, you should reset the Life Counters as follows:

Replaced part	Reset Life Counters
Scan-axis motor SV	Scan-Axis Motor
Belt assembly SV	Scan-Axis Belt
Carriage assembly SV	Carriage
Ink supply tubes SV (with trailing cables)	Tubes and Trailing Cable
Service station SV	Right Spittoon & Service Station
Cutter assembly SV	Cutter

5. Once you have selected the Life Counters to reset, a message similar to the following will be displayed on the Touch Control Panel. Press the **OK** key to reset the selected Life Counters or press **Cancel** to exit without resetting the Life Counters.

   Example 1:

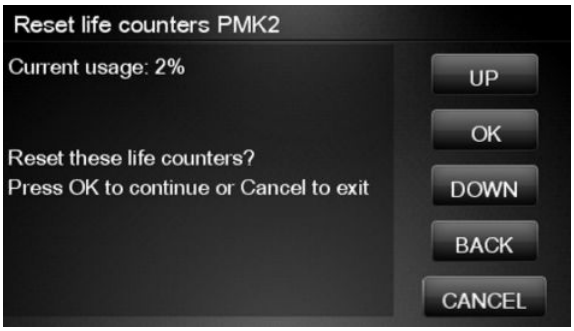

   Example 2:

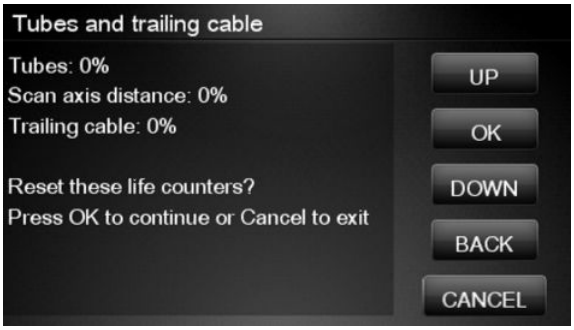

Diagnostic Print

The purpose of this Service Utility is to print the Diagnostic Print in order to identify Print Quality problems. Information regarding the Diagnostic Print is located in Chapter 6, Print Quality, for further information on using this print refer to the Image Quality Troubleshooting Guide (in the EWS-Support Tab or in the CD).

1. Select **Diagnostic Print**.

2. Select the Diagnostic Print required.

Set Date and Time

The purpose of this Service Utility is to set the internal clock of the product.

Perform the Set Date and Time utility as follows:

1. In the Service Utilities submenu, scroll to **Set Date and Time** and press this menu option.

2. The product will display the current time and the new time. Use the **Up** and **Down** keys to go through the digits and press the **OK** key to go to the next digit. You can press the **Cancel** key at any time to exit the utility without making any changes.

3. Follow the instructions to enter the new date and time, then press **OK**.

4. Press **OK** to confirm the new date and time. Press **Back** to modify the new date and time. Press **Cancel** to exit without changing the date and time.

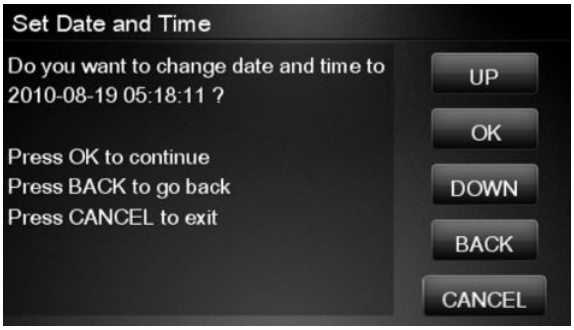

If the clock cannot be set, there could be a firmware error. Make sure you have the latest version of the firmware.

5. Once the new time has been confirmed, the Touch Control Panel will prompt you to restart the product.

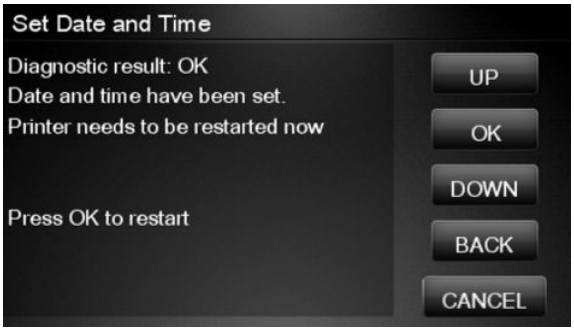

6. Press **OK** to restart the product.

Enable/Disable Firewall

The purpose of this Service Utility is to enable or disable the system firewall. There are currently no known cases when this will be needed, but it may help some users experiencing unexplained connectivity failures on embedded LANs.

Perform the Enable/Disable Firewall utility as follows:

1. In the Service Utilities submenu, scroll to **Enable/Disable Firewall** and press this menu option.

2. The Touch Control Panel tells you whether the firewall is currently enabled or disabled, and allows you to change its status by pressing the **Up** and **Down** keys and then the **OK** key.

3. The system upgrades the internal memory to reflect the chosen selection.
4. Press **OK** to finish.

Enable/Disable Sleep Mode

1. In the Service Utilities submenu, scroll to **Enable/Disable Sleep Mode** and press on this menu option.

2. The Touch Control Panel tells you whether sleep mode is currently enabled or disabled. Press **OK** to continue or **Cancel** to leave the sleep mode status unchanged.

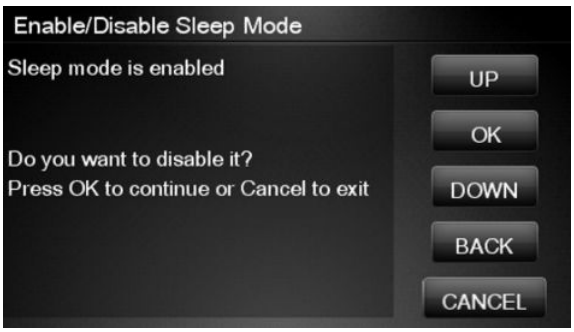

3. The Touch Control Panel displays the sleep mode status. Press **OK** to return to the menu.

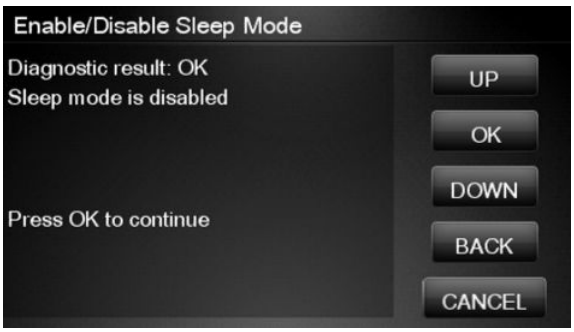

Disk Wipe DoD 5220.220M

The purpose of this Service Utility is to erase data from the internal Hard Disk securely, according to the directive DoD 5220.220M.

The product's hard disk is used as a temporary storage area for print jobs. The Secure Disk Wipe utility can erase your information from the hard disk to prevent unauthorized access.

Secure Disk Wipe provides three different levels of security:

- **Insecure Mode:** All pointers to the information are erased. The information itself is **not** erased, and remains on the hard disk until the disk space it occupies is needed for new print jobs. The new print information overwrites the old information. While the information remains on the disk, it is difficult for most people to access, but may be accessed using software designed for that purpose. This is the normal method in which files are erased on most computer systems; it is the fastest method but the least secure. This is the default security level when using Secure Disk Erase.
- **1 Pass Mode:** All pointers to the information are erased, and the information itself is overwritten with a fixed character pattern. This method is slower than Insecure Fast Erase, but more secure. It may still be possible to access fragments of the erased information by using special tools to detect residual magnetic traces.
- **5 Pass Mode:** All pointers to the information are erased, and the information itself is repetitively overwritten using an algorithm designed to eliminate any residual traces. This is the slowest method, but the most secure. Secure Sanitizing Erase meets the US Department of Defense 5220-220M requirements for clearing and sanitization of disk paper.

Execute the Disk Wipe DoD 5220.220M utility as follows:

1. In the Service Utilities submenu, scroll to **Disk Wipe DoD 5220.220M** and press this menu option.

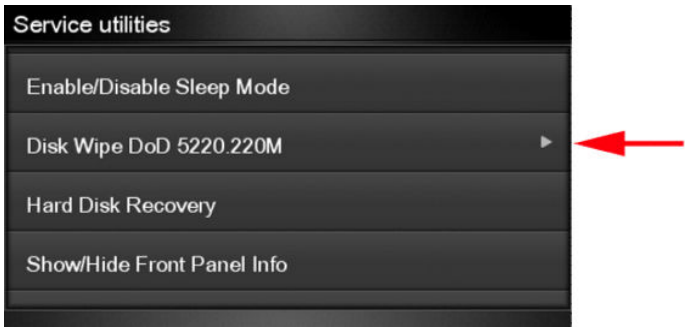

2. In the Disk Wipe DoD 5220.220M submenu, scroll to **Sanity Level** and press **OK**.

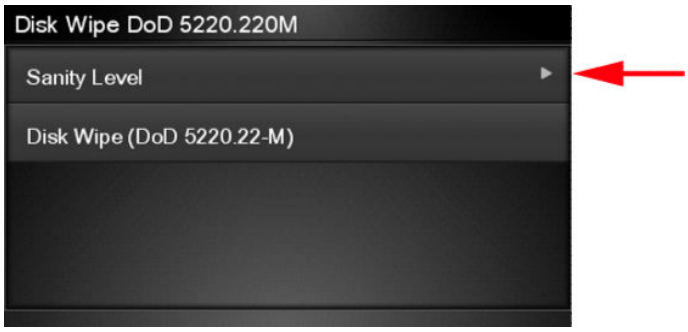

3. In the Sanity Level submenu, scroll to the required Sanity Level and press **OK**.

NOTE: Erasing the Hard Disk drive using either of the Secure Sanitize Levels is a very slow process, 6 hours for the 1 Pass mode and 40 hours for the 5 Pass mode.

4. When the Sanity Level has been changed, the Touch Control Panel displays the following message, or an error message if there is some problem.

5. In the Disk Wipe DoD 5220.220M submenu, scroll to **Disk Wipe (DoD 5220.220M)** and press **OK**.

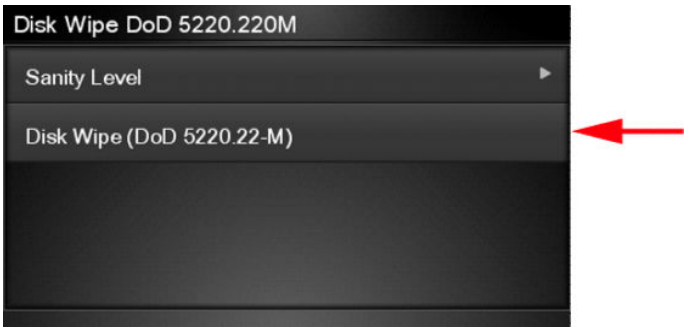

6. When the following message appears on the Touch Control Panel, you must select whether you would like to perform a complete erase of the Hard Disk Drive using the previously selected erase mode by pressing **OK**. Press **Cancel** to exit the utility

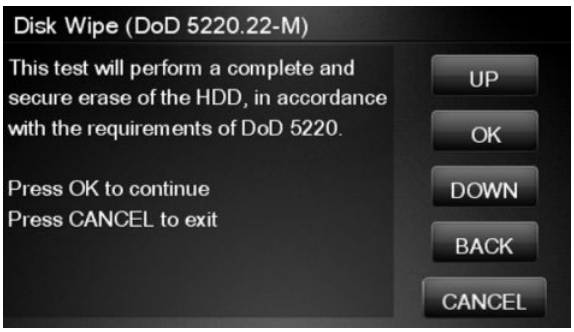

7. When the following message appears on the Touch Control Panel, you must select whether you want to continue and completely erase the Hard Disk Drive by pressing **OK**. Press **Cancel** to exit the utility.

8. The erase process starts and the Touch Control Panel shows a setup progress bar.

9. The product reboots into the Disk Wipe mode, and continues with the disk erase until it is completed.

⚠ CAUTION: Do not try to interrupt this process. All Touch Control Panel keys are disabled while the product erases the Hard Disk Drive.

Hard Disk Recovery Utility

The Hard Disk Recovery utility erases the hard disk and restores the factory firmware.

1. In the Service Utilities submenu, select **Hard Disk Recovery** and press this menu option.

2. The Touch Control Panel reminds you to unload the paper.

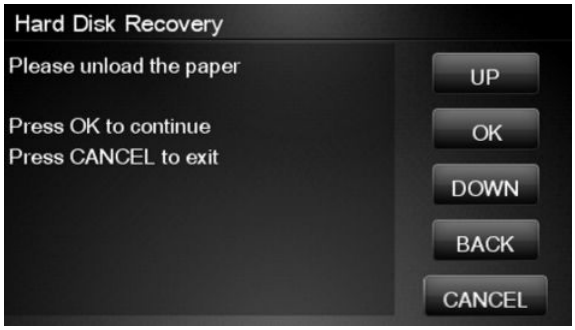

3. Press **OK** to proceed or **Cancel** to exit.

   If you press **OK**, the product begins to erase the hard disk and restore the factory firmware; it restarts automatically during this process. The Touch Control Panel displays a progress bar.

⚠ CAUTION: Do not try to interrupt this process. All Touch Screen Panel keys are disabled until it has finished.

Show/Hide Touch Control Panel Information

The purpose of this utility is to prevent network information from being viewed directly from the EWS or the screen of the Touch Control Panel.

1. In the Service Utilities submenu, scroll to **SNMP Language Write Access** and press this menu option.

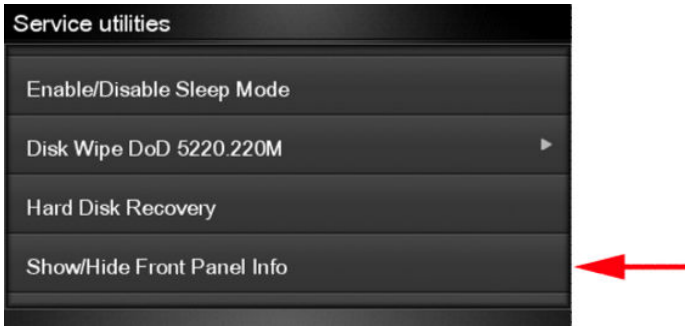

2. Use the **Up** and **Down** button to change if network information is viewable, press **OK** to confirm.

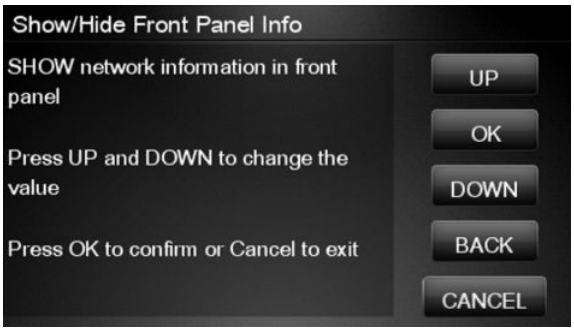

3. The change is complete, press **OK** to return to the main menu.

Enable/Disable Port 280

This security utility allows you to enable or disable port 280 communication with the Embedded Web Server using the embedded LAN connection.

1. In the Service Utilities submenu, scroll to **Enable/Disable Port280** and press on this menu option.

2. The Touch Control Panel tells you whether the port is currently enabled or disabled, and allows you to change the situation by using the **Up** and **Down** keys and pressing **OK**.

3. Press **OK** to finish.

File System Check

The File System Check checks the file system on the hard disk and automatically corrects any problems that it finds.

1. In the Diagnostics menu, select **File System Check** and press on this menu option.

2. The Touch Control Panel asks you if you want to proceed with the File System Check.

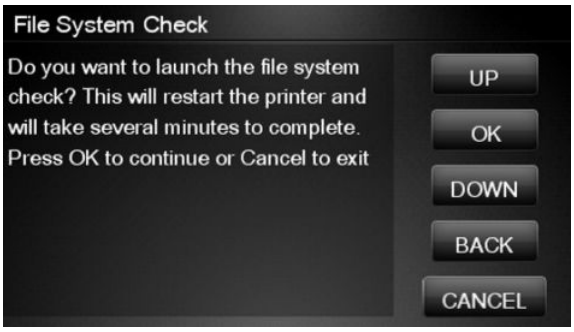

3. Press **OK** to proceed or **Back/Cancel** to exit.

   If you press **OK**, the product restarts and the File System Check is performed.

I/O Tests

The I/O Tests service test checks the network interface hardware of the Formatter. To run this test successfully, the product's embedded LAN connector must be connected to an Ethernet network.

Perform this test after replacing the Formatter.

1. In the Service Utilities submenu, scroll to **I/O Tests** and press on this menu option.

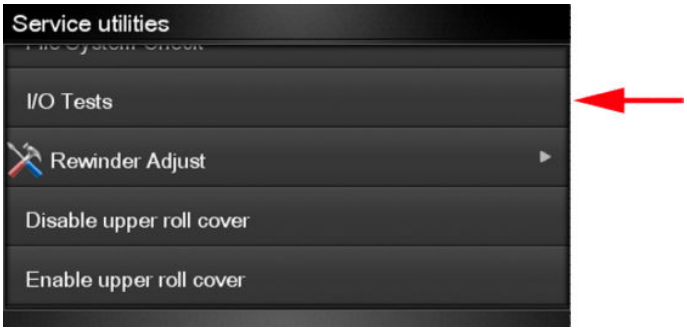

2. The Touch Control Panel asks you if you want to proceed with the I/O tests.

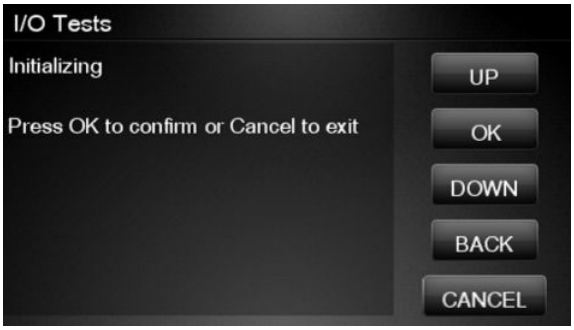

   Press **OK** to proceed or **Cancel** to exit.

3. The Touch Control Panel displays the I/O information.

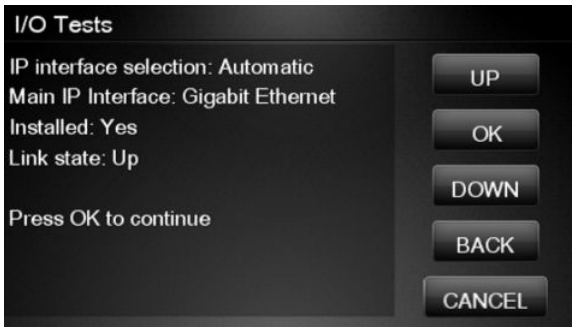

4. Press OK to start the test. The product tests the I/O interfaces and displays the result as passed or failed after a few seconds.

NOTE: If the test fails when the product is connected to a network, there may be a hardware problem with the network chip on the formatter board.

Rewinder Adjust

The Rewinder Adjust utility clears the calibration parameters associated with a Rewinder motor when it has to be replaced.

The changes made by this utility take effect only after the product has been restarted. Therefore, you are recommended to proceed in the following order.

1. Use the Rewinder Adjust utility to reset the calibration parameters.

   a. In the Service Utilities submenu, scroll to **Rewinder Adjust** and press on this menu option.

   b. Enter the 4-digit 2nd level access code “5494” and press **OK**.

   c. Select the Rewinder for roll 1 or roll 2 and press **OK**.

d. Confirm your selection by pressing **OK**.

e. The product resets the calibration parameters and checks that the default values have been correctly saved inside the NVM memory. If the check fails, a 79:04 error is generated, and the procedure is interrupted. Otherwise, the product confirms success as follows.

2. Turn off the product.

3. Replace the Rewinder motor.

Disable Upper Roll Cover

With the upper roll cover enabled, the arm pinches may leave marks on some types of glossy instant-dry paper; these marks may be particularly visible in prints with black area fills. This utility disables the upper roll cover in order to allow the product to print with the upper roll cover opened. The roll cover will be re-enabled automatically when the product is restarted.

Before starting, you should load instant-dry paper as Roll 1.

1. In the Service Utilities submenu, scroll to **Disable upper roll cover** and press this menu option.

If roll 1 is not active, it is automatically advanced to the platen and activated.

2. Wait until you see the following message.

Open the upper roll cover and press **OK**.

Disabling the upper roll cover has some implications for the operation of the product.

- If the product switches to printing on Roll 2 for any reason, Roll 1 can be unloaded. This can be avoided by not loading any Roll 2.
- If the roll cover is closed without restarting the system or by selecting the Enable Upper Roll Cover utility, you may see print quality issues and false reports of paper jams.
- A new roll cannot be loaded as Roll 1.

Enable Upper Roll Cover

This utility re-enables the upper roll cover without restarting the product.

1. In the Service Utilities submenu, scroll to **Enable upper roll cover** and press on this menu option.

2. Close the roll cover when requested by the Touch Control Panel.
3. Wait until you see the following message.

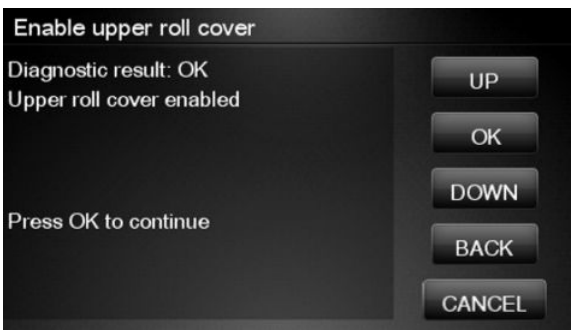

Press **OK**.

Special Cutter Mode

The purpose of this utility is to improve the cut quality for some papers that present some cut-quality problems (straightness problems) using the normal mode. When this mode is enabled, this utility changes the cutting mode for all generic natural tracing papers. This mode reduces the problems, but cuts more slowly.

1. In the Service Utilities submenu, scroll to **Special cutter mode** and press on this menu option.

2. Press **OK** to enable special cutter mode or **Cancel** to disable it.

NOTE: Once enabled, this mode will remain in operation, even after the product has restarted, until you disable it using the same utility.

NOTE: Remember that only tracing papers are affected by this utility.

Scanner Validation

By executing this validation, the product will perform the following scanner tests:

- ScanDump
- Focus
- Skew
- Dead/hot pixels
- Alignment/Stitching
- Chromatic aberration
- Streak

- Gray matching
- Signal noise

NOTE: Before running the scanner validation check that the calibration sheet is free from dust, spots or stripes. Check that the calibration sheet is not dirty, wrinkled, scratched or folded.

NOTE: Before running the scanner validation open the scanner to check that the glass plate is free of dirt, dust and scratches. Clean the glass plate if necessary before proceeding Cleaning the Glass Plate on page 548.

1. In the Service Utilities submenu, scroll down and select the **Scanner validation** option.

2. Enter the 4-digit 2nd level access code “5494” and press **OK**.

3. The Touch Control Panel will then prompt you to load the calibration sheet.

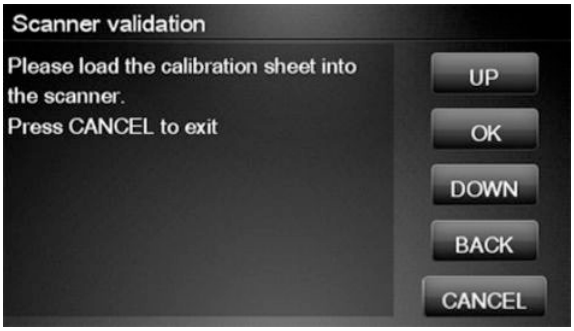

4. Hold the calibration sheet from both sides and place it facing the arrow in the centre of the sheet in front of the Page icon present on the input tray of the scanner. Push the sheet with both hands on both sides at the same time to load the sheet with no skew. Press OK to continue with the test.

5. Press OK to continue with the test.

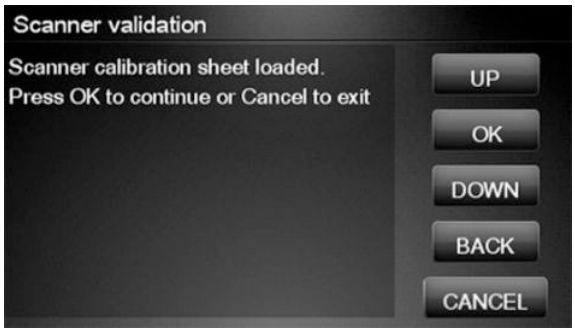

6. The Touch Control Panel will then display a percentage with the progress of the validation.

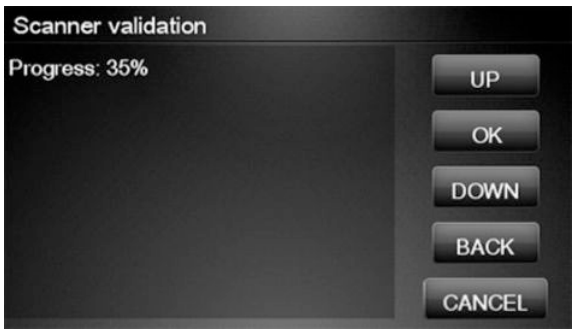

7. Wait until the scanner validation test has completed. The Touch Control Panel will then show the test results. Press OK to continue

NOTE: If scanner validation result is **FAIL**:

- Check that the calibration sheet is in good condition according to previous note. Replace with a new one if necessary.
- Check that the glass plate is in good condition. Replace with a new one if necessary, see Glass Plate on page 577.
- Inspect that the glass plate is correctly installed and is clean, Cleaning the Glass Plate on page 548.
- Perform a scanner calibration and repeat the validation Calibrate the Scanner on page 224.
- If the scanner validation result is FAIL with error CWS_RC_VAL_DEADPIXEL_FOUND, replace the individual CIS element accordingly; see Removal and Installation, Individual CIS Element see CIS Element (MFP only) on page 524.

After the validation, a set of files is saved in the CWS_validation folder. SCANdump and log files will be written every time a validation is being executed. TIFF files will only be written if a test fails. If the validation is performed again the files are overwritten. To retrieve the log files, Appendix C: Obtaining the product log and the diagnostics package on page 119. The following files are written:

File name	CWS_validation folder
SCANdump_Xxx.con	SCANdump files can be opned with SCANview. (part of SCANtest)
scanTRUSTresult.log	Results file, contains the following: • Measured values and limits • Error codes (if any)
scanTRUST.log	The Log file. Primarily contains information that can help troubleshoot where an error has occurred.
*.tif	Scanned images of failed tests. These are mainly for escalation to division for troubleshooting purposes.

NOTE: The Diagnostic package (reduced level) will contain only all LOG and CON files. Extended diagnostic package (full level) will contain all files.

SCANdump

SCANdump is an archive file that can be viewed with SCANview (SCANtest). The SCANdump file consists of the following:

- Four light profiles (see below for an explanation on Light Profiles).
  - RGB: Unadjusted.
  - RGB: Adjusted.
  - Grey: Unadjusted.
  - Grey: Adjusted.
- A statistic file and documentation about how to use the system.

Light Profiles

The light profiles are a snapshot of what the image sensor sees at the time the SCANdump was made. The light profiles will in some degree be affected by of wear and tear, cleanness, and also the condition of the calibration sheet that was used to calibrate the unit. There are two types of light profile, adjusted and unadjusted.

The Unadjusted light profile is a raw picture of the light source. All imperfections of the sensors and the light guide (in one, the CIS elements), are visible. Only the general light level has been manipulated.

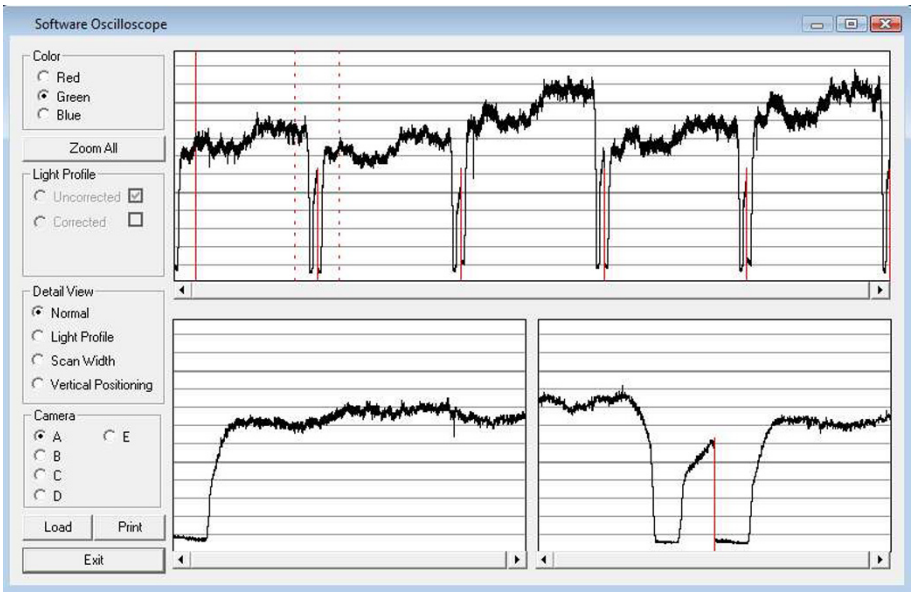

The Adjusted light profile is corrected according to the calibration sheet, in other words, the calibration sheet has been used as a reference to correct the imperfection of the CIS elements.

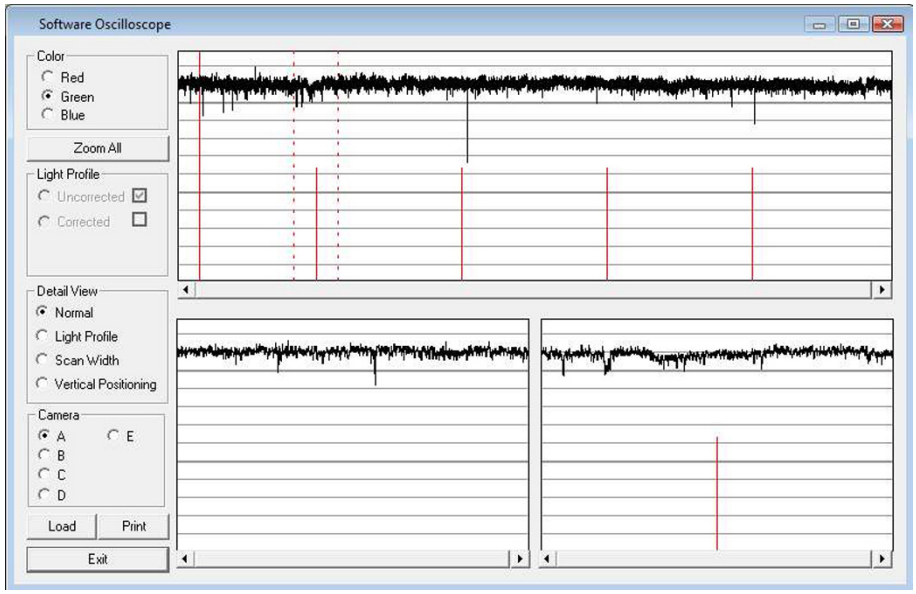

Since we do the basic calibration in two modes, one for the color channels and one for Gray, two sets of profiles are included in the SCANdump file.

General view of the light profile

This is the overview screen of the profiles of the CIS elements, here shown as A, B; C; D; E. Each arc represents a CIS element. The lower half of the screen can be used to amplify the profile of a selected CIS element, for a closer look.

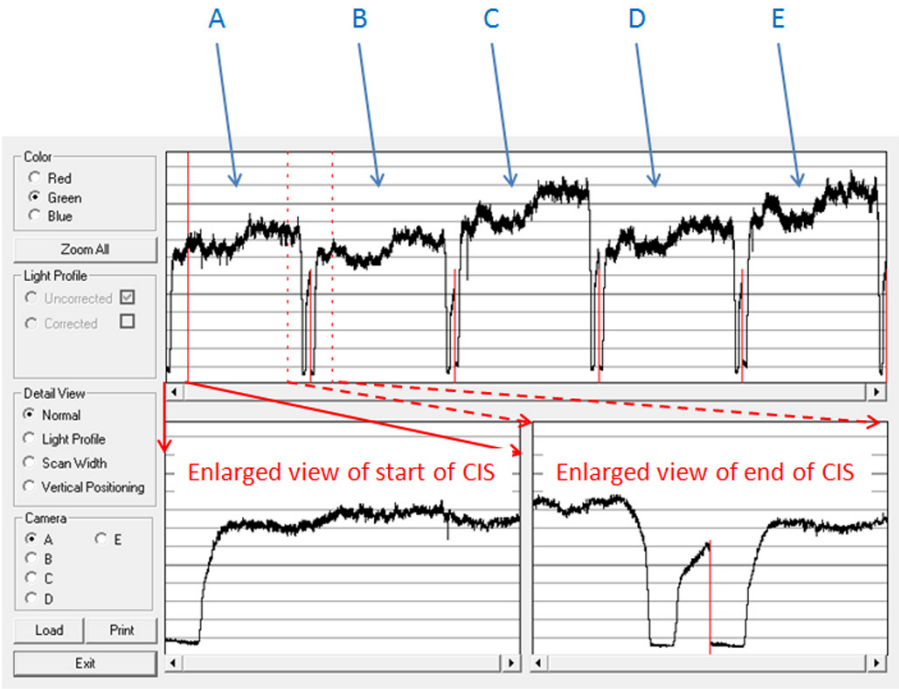

Reading the Uncorrected Light Profile

A uncorrected light profile should be within the Min/Max shown here. Since the Light source is located at the end of the CIS element it is normal that the light profile's level is higher here and that the level drops a little towards the center of the CIS.

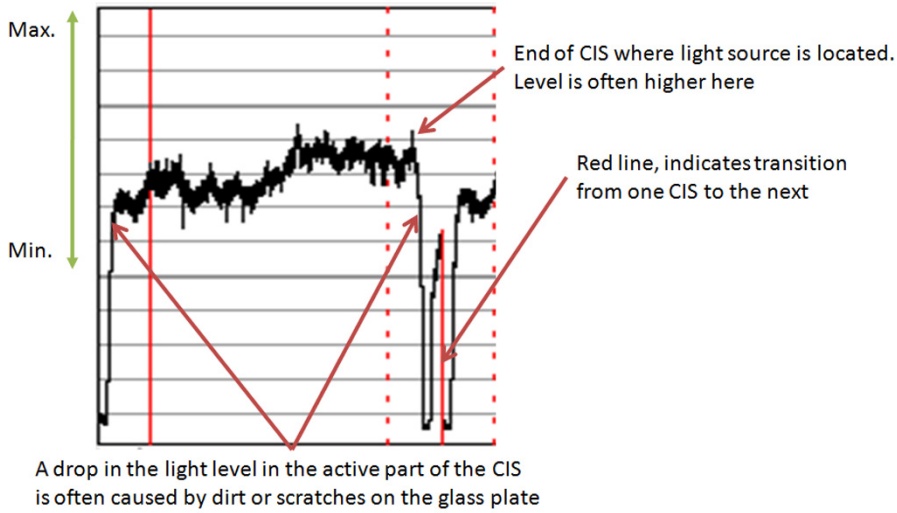

A white patch is located at each end of the CIS element. The one at the start of the CIS is a bit smaller than the one at the end, it makes a black point, unlike the end which makes a Black and a White point.

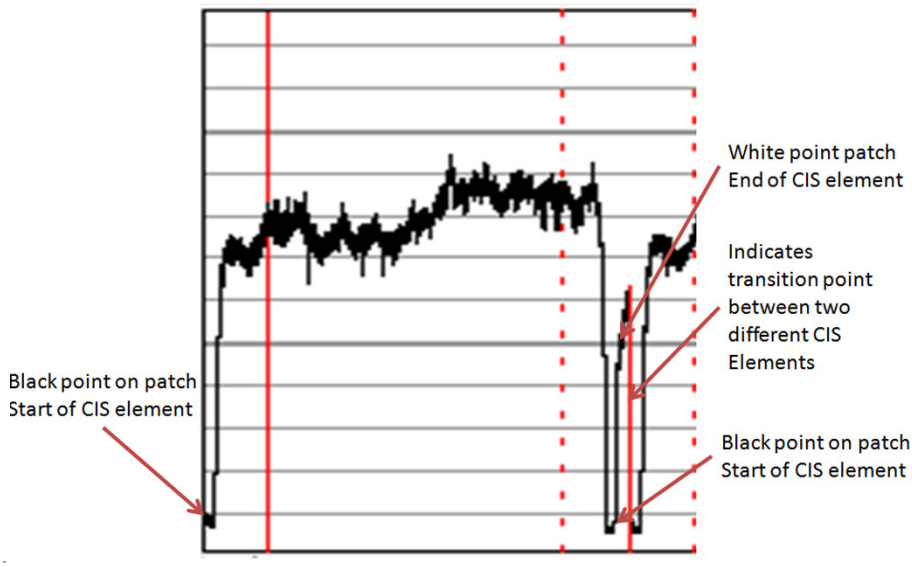

Reading the Corrected Light Profile

A corrected light profile should be within the Min/Max shown here.

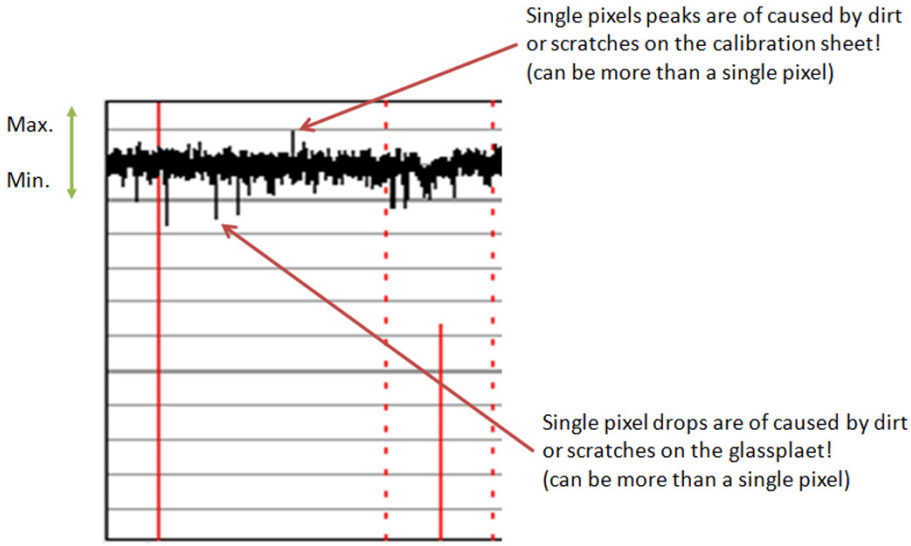

Peaks will show up in a scan as a lighter color and not necessarily in all colors, it depends on which color channels are being affected by the dirt/ scratch.

Drops will be seen as a dark line in the scan and again not necessarily in all colors, it depends on which color channels are being affected by the dirt/ scratch.

If the peak or the drop is within 1-2 div (lines) it is usually not noticeable in the scan and is just general noise. The dirt or the scratch can be from one pixel to several!

Statistics File

This file contains useful information about the usage of the system, along with firmware version and last calibration date.

Troubleshooting image quality using the light profiles

A drop in the light profile is often caused by dirt/dust on the glass plate A spike is related to the calibration, either dirt or dust on the glass plate during the calibration or a dirty calibration sheet.

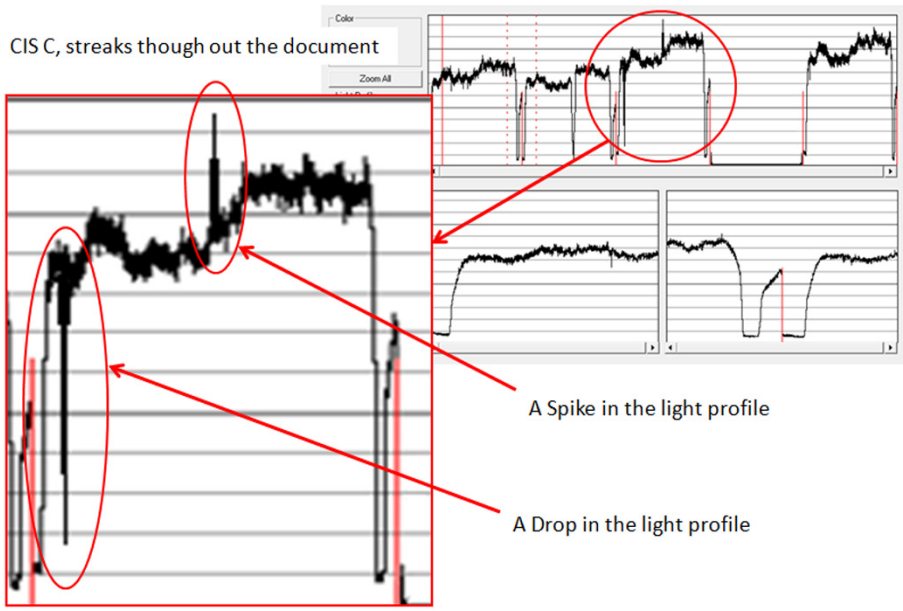

A light profile with an about 20 pixel drop can be a contaminated lens in the CIS module.

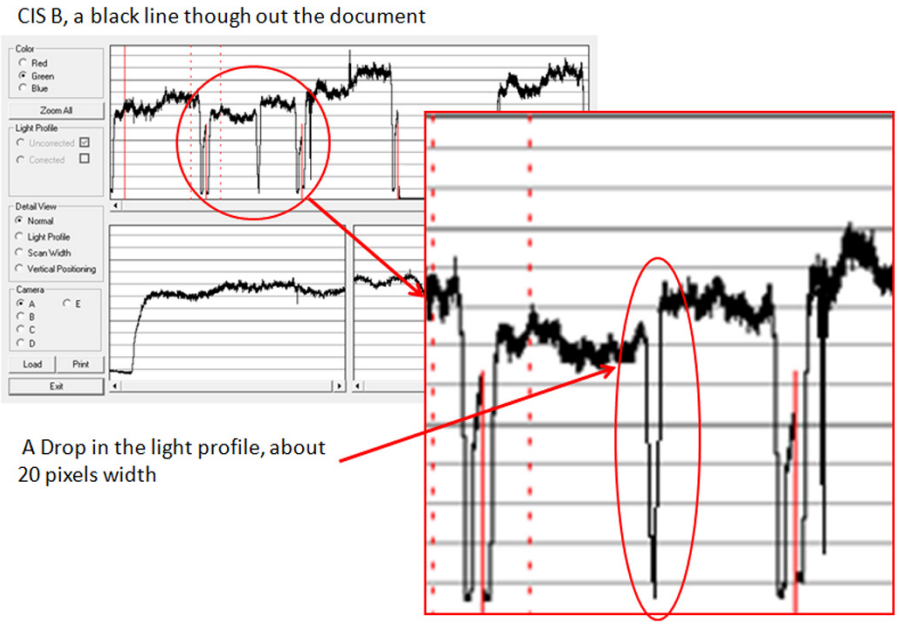

A light profile with an about 20 pixel drop can be a contaminated lens in the CIS module.

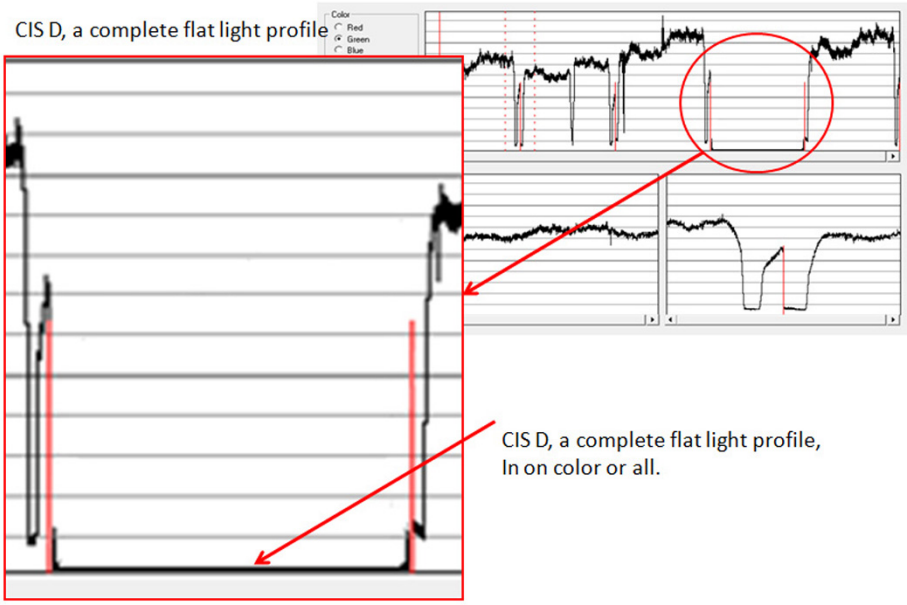

A completely flat light profile in one color or all colors can either be one specific LED or the entire CIS module that is faulty.

Adjustment scanner Y-Axis scale

The scanner may produce a vertical distortion in scanned images. It is important in CAD plots to maintain the aspect ratio of the originals. The purpose of this utility is to correct this vertical distortion. This sections describes how to calculate and set the Y-Axis adjustment scale.

Use the following procedure to print the Scanner IQ plot.

1. From the Home Screen press the Information icon on the top left corner of the screen. For information regarding the Touch Control Panel keys, Using the Touch Control Panel (MFP only) on page 2.

2. From the product Information Area, press the Main Menu/tool icon on the bottom right corner of the screen.

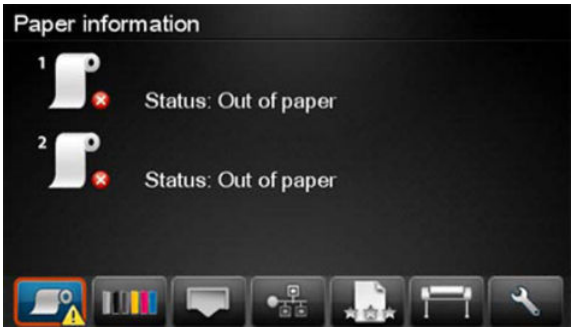

3. From the Main Menu, scroll down and select the **Image-quality maintenance** option.

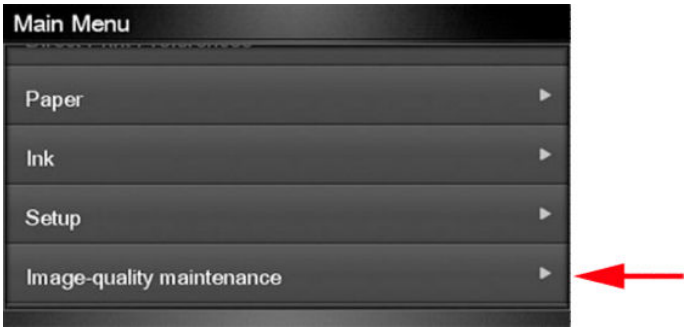

4. From the Image-quality maintenance menu, scroll down and select the **Scanner IQ plot** to print.

5. The next procedure describes how to copy the Scanner IQ plot:

6. From the Home Screen press the **Copy** icon on the left side of the screen

7. Press **Start**.

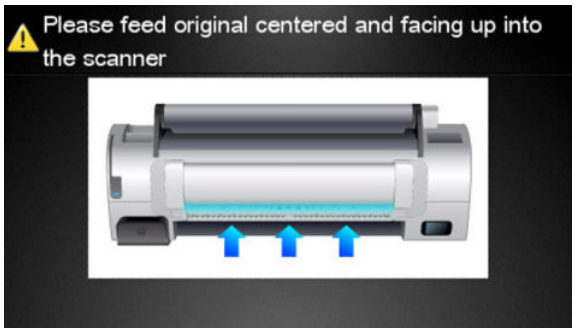

8. The Control Panel prompts you to feed the original. Load the Scanner IQ plot that you printed previously in the Scanner input tray. Wait then for the product to scan and print the image.

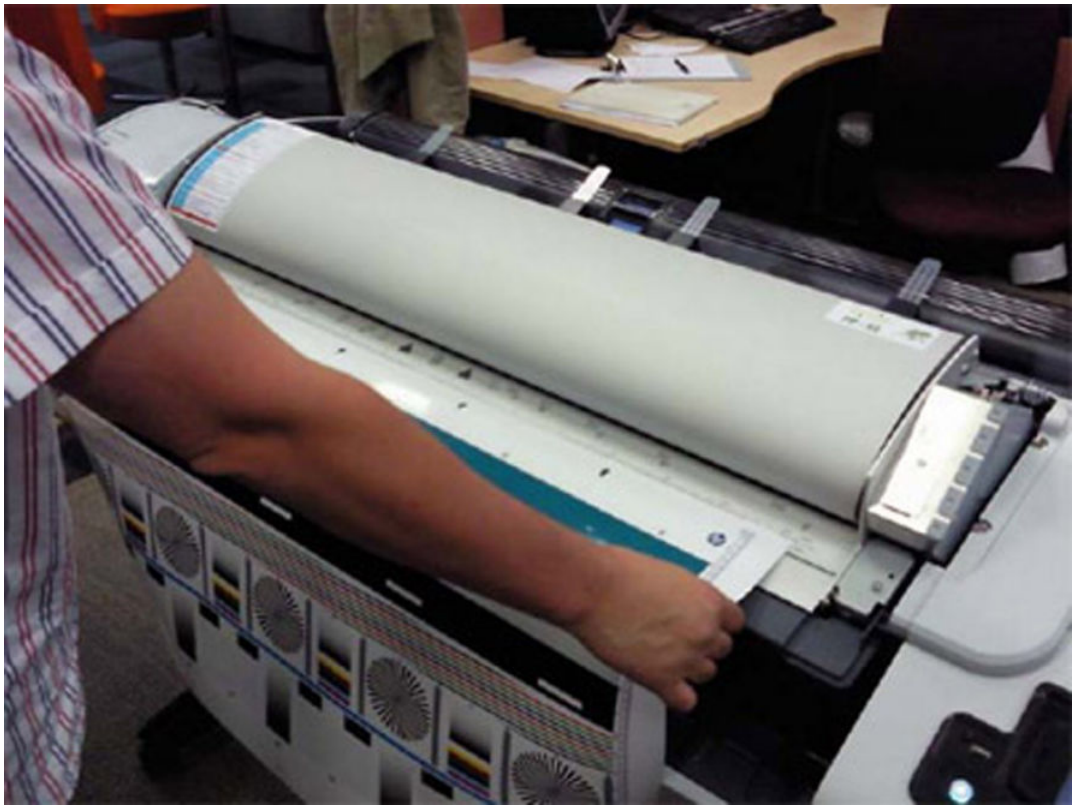

9. Follow the next steps to calculate the Y-Axis adjustment scale: Measure the total length of the two vertical rules at both sides of the copied plot (we call it M1 and M2).

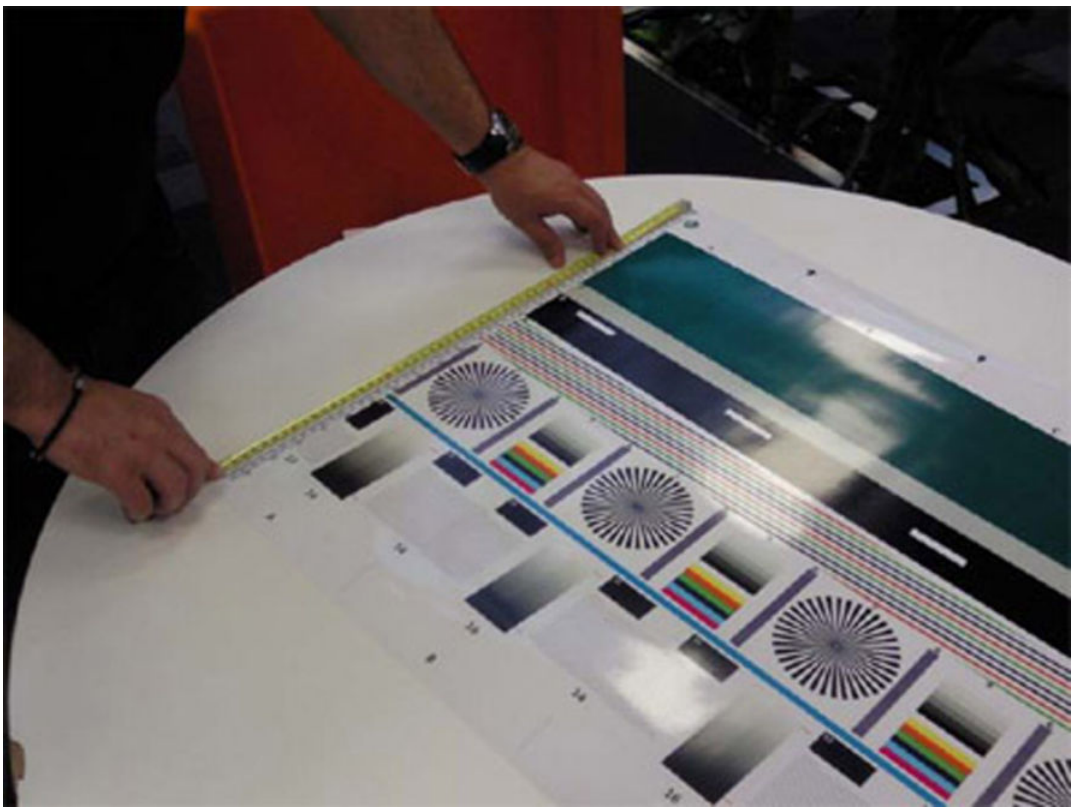

NOTE: If M1 is quite different from M2 (more than 1mm or 1/16th inch) then refer to incorrect paper advance, skew during scanning, or horizontal wrinkles in the Image-quality troubleshooting guide on chapter 3, page 31 .

10. If M1 and M2 are similar (within 1mm or 1/16th inch) then consider M1 = M2 = M and calculate P as: Y-Axis adjustment scale = -100 × (M – T) / T Where T is the total length of the vertical rules (T = 22 inches or 57 mm). Follow the next steps to set the Y-Axis adjustment scale:

11. In the Service Utilities submenu, scroll to the **Adjustment scanner Y-Axis scale** and press on this option.

12. Press **OK** to continue.

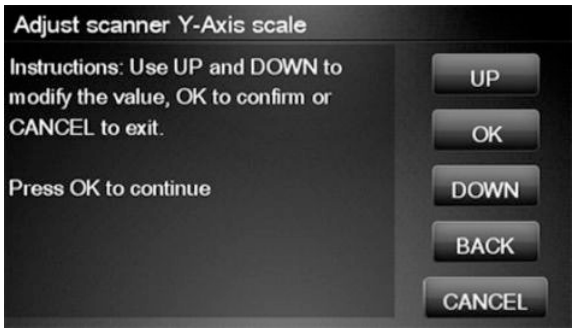

13. Press **UP** and **DOWN** to pre-set the new value of Y-Axis adjustment scale and press **OK**.

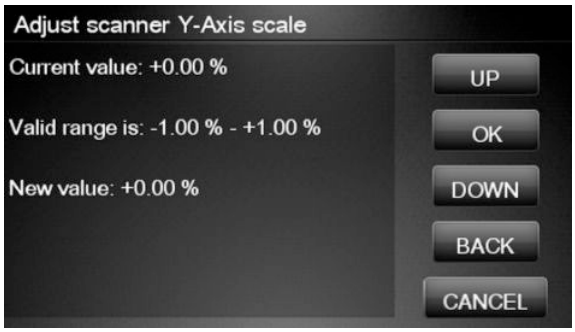

14. Repeat the process from step 6 onwards until M is equal to T.

Reset Access Control

Used to reset the administration password that protects the access to the EWS and to some options in the Touch Control Panel of the printer. These are the features that are protected if a password is setup:

- Network connectivity (also including internet connectivity and diagnostics & troubleshooting of the network connectivity).
- Control firmware upgrades.
- Setup.
  - Reset factory defaults
  - External hard disk connection
- Security.

Uninstall Applications

Used to uninstall any application that is available through the Applications option in the touch screen (applications available in US only).

Accounting Mode

Used to enable the Abacus accounting tool (available in US only).

Service Calibrations

The product has several calibration procedures that must be performed under certain conditions.

NOTE: REMEMBER THAT CERTAIN CALIBRATIONS ARE REQUIRED EVEN IF AN ASSEMBLY HAS BEEN DISASSEMBLED TO GAIN ACCESS TO ANOTHER ASSEMBLY OR COMPONENT.

The following is a list of all internal service calibrations available in the product. For instructions to enter the service calibrations menu, see Entering the Service Calibrations Menu on page 206.

+ Paper Advance Calibration on page 208

    Print calibration pattern

    Scan calibration pattern

+ Drop Detector Calibration on page 215

    Calibrate drop detector

    Reset calibration flag

Line Sensor Calibration on page 218

Calibrate Sheet Sensor on page 223

Calibrate the Scanner on page 224

NOTE: If **all** the Calibrations need to be performed (for example, when both the Formatter and the Engine PCA have been replaced), you must perform them in the above order.

Entering the Service Calibrations Menu

1. From the Home Screen press the Information icon on the top left corner of the screen. For information regarding the Touch Control Panel keys Using the Touch Control Panel (MFP only) on page 2.
2. From the product Information Area, press the Main Menu / tool icon on the bottom right corner of the screen.

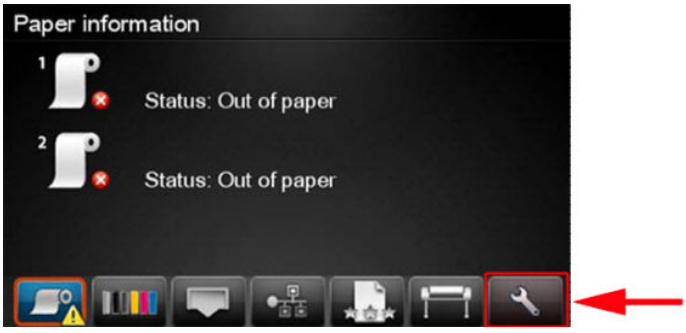

3. Scroll down to the lowest menu option and press on the **Service menu** option.

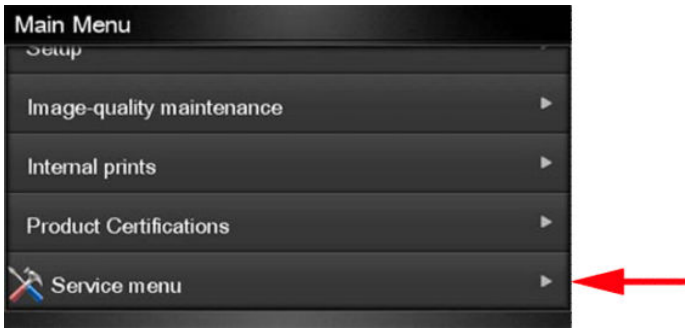

4. Enter the 4-digit 1st level access code “3174” and press **OK**.

5. Press on the Service calibrations menu option.

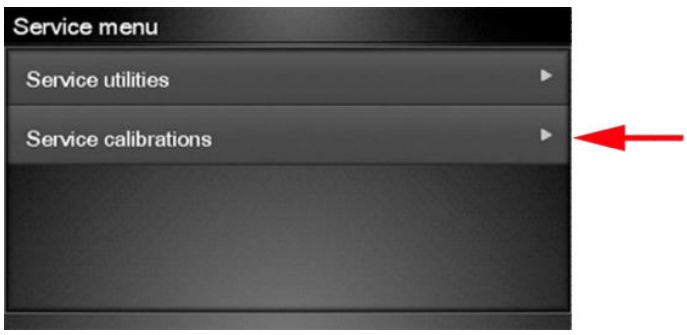

6. From the Service calibrations menu you can scroll up and down the available utilities. Press on the selected menu option.

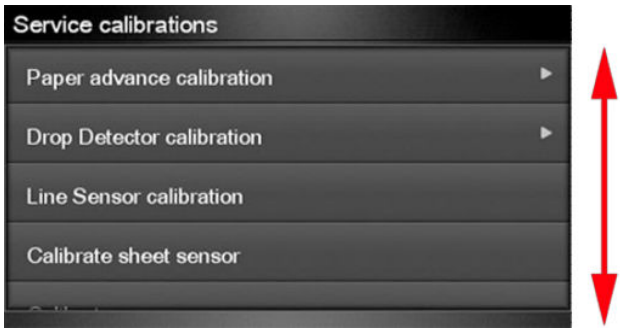

NOTE: In some cases a quick press of a button may not be recognized by the product. When pressing a button, be sure to press it firmlyl.

Paper Advance Calibration

The purpose of this Service Calibration is to calibrate the nominal advance of the paper. This calibration is necessary to control the exact movement of the paper in order to avoid print quality problems like banding.

If you need to perform a Paper Advance Calibration to solve a print quality problem, it is recommended that you first try the Paper Advance Calibration from the user's menu, which will calibrate the product to a specific paper type.

NOTE: You can perform Paper Advance Calibration on a sheet or roll, but the paper type should always be HP Universal Instant-dry Photo Gloss. You are recommended to order the Paper Advance Calibration Kit (24-in models: Q6683-60241, 44-in models: Q6687-60093), which contains two sheets of HP Universal Instant-dry Photo Gloss paper.

Perform the Service Accuracy Calibration whenever:

- Banding is detected in prints.

Service calibrations also need to be performed after removing or replacing certain product components. If you have removed or replaced product components, check the Service Calibration Guide to Removal and Installation on page 267 to see which tests and calibrations you need to perform.

The Paper Advance Calibration is split into two parts and should always be done in this order:

1. Print Calibration Pattern - The product first calibrates the Analog Encoder and then prints the Paper Advance Calibration pattern.
2. Scan Calibration Pattern - The product scans the Paper Advance Calibration pattern in order to calibrate the nominal advance of the paper.

   NOTE: Only scan the Calibration Pattern in the product that was used to actually print it. Using the Calibration in a different product could cause it to experience paper advance problems. After scanning the Calibration Pattern, it should be discarded.

TIP: If you are using roll paper, you are recommended to calibrate using the upper roll, which will give better results.

Perform the Paper Advance Calibration as follows.

1. Unload paper from the product.
2. In the Service Calibrations submenu, scroll to **Paper advance calibration** and press **OK.**

3. In the Paper Advance Calibration submenu, scroll to **Print Calibration Pattern** and press **OK.**

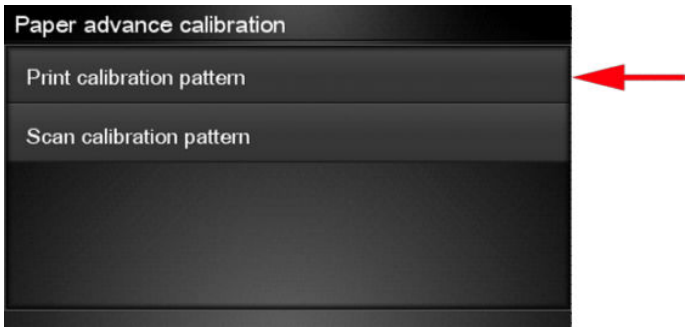

4. When the following message appears on the Touch Control Panel, you must select whether you would like to continue with the calibration by pressing the **OK** key. Press **Cancel** to exit the calibration.

5. If paper is detected, the product will prompt you to remove it. If paper is **not** detected, the calibration will continue.

6. The product will start to calibrate the Analog Encoder and the following message will be displayed on the Touch Control Panel.

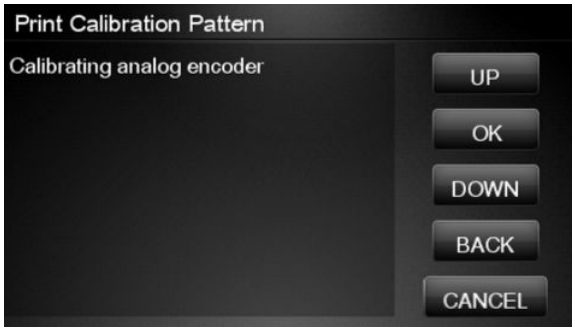

If the Calibration is not done or if the values are out of the limits, a warning message will appear on the Touch Control Panel. In this case, try the following:

- Check that the product has the latest firmware version. If not, update the firmware to the latest version.
- Retry the Paper Advance Calibration.

7. Once the Analog Encoder has been calibrated correctly, the Touch Control Panel prompts you to select the type of paper you will use. Use the Arrow keys to choose roll or sheet paper. Press the OK key to start loading the paper.

8. The Touch Control Panel prompts you to load the paper. Make sure you load the paper that corresponds to your paper type selection.

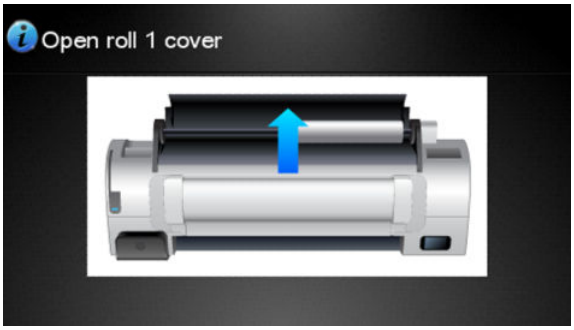

9. The Touch Control Panel prompts you to select the paper category you will use for the calibration. Scroll to your paper category and select it to continue the paper load process.

10. The Touch Control Panel prompts you to select the specific type of paper you will use for the calibration. Scroll through the menu and select your paper type.

11. The Touch Control Panel displays the following screen, press ok.

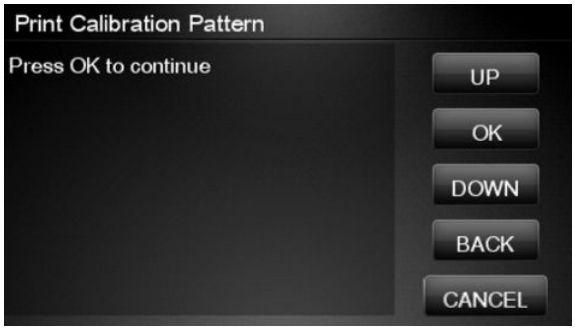

12. Once the paper is loaded into the product, the following message will appear on the Touch Control Panel.

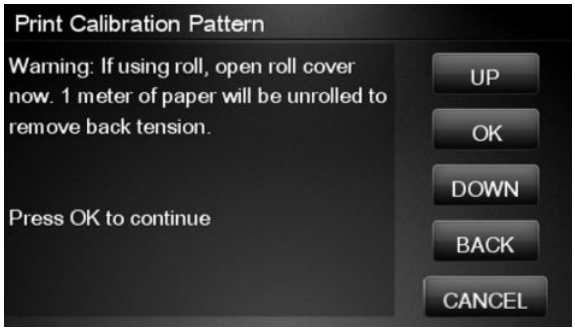

If roll paper has been loaded instead of a cut sheet, it's important that you open the cover of the loaded roll. After you press OK, the product will automatically unroll 1 meter of paper and roll it back again to remove the back tension, and then start printing the pattern. Please note that opening the roll cover is crucial for avoiding potential paper jams during this operation. Press the OK key to continue.

13. Press OK to continue.

14. The product advances and reels in about a meter of paper. The Touch Control Panel displays the following messages:

- Advancing Paper
- Printing Pattern

15. The product will start to print the Paper Advance Calibration Pattern. This could take several minutes during which the following message will be displayed on the Touch Control Panel.

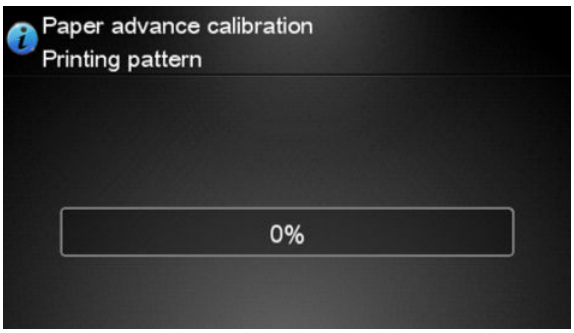

16. When the Calibration Pattern has been printed successfully, the Touch Control Panel reminds you to leave it to dry for a while.

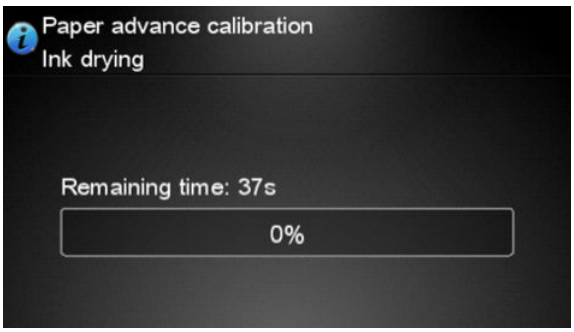

17. When the Calibration Pattern is dry, the Touch Control Panel will prompt you to continue. Press **OK**.

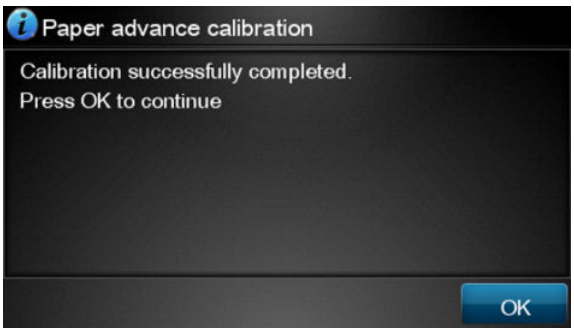

18. If you are printing on a roll, the product cuts the paper and unloads the roll.

19. Return to the Paper Advance Calibration submenu, scroll to **Scan Calibration Pattern** and press **OK**

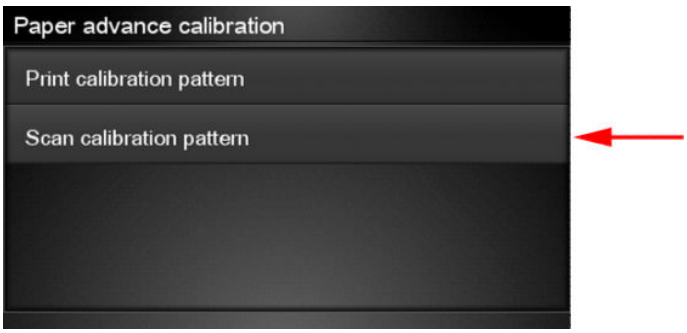

20. When the following message appears on the Touch Control Panel, you must select whether you would like to continue with the calibration by pressing the **OK** key. Press **Back** or **Cancel** to exit the calibration.

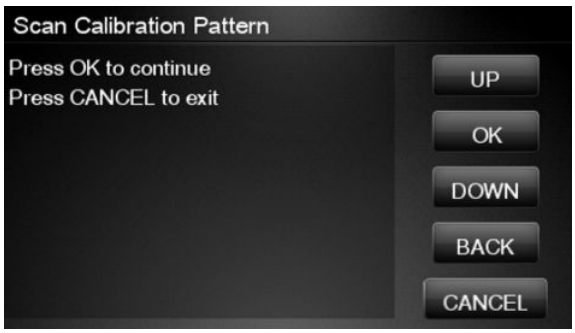

21. A message will appear advising you that you will need to load the Calibration Pattern into the product. Make sure that you rotate the printed pattern 90° clockwise and reload it printed-side down, so that the black arrows go into the product first. Press the **OK** key to continue.

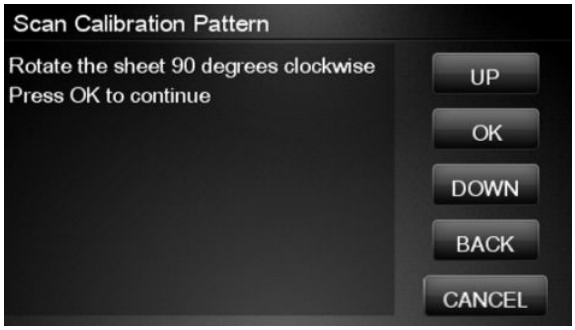

NOTE: Only scan the Calibration Pattern in the product that was used to actually print it. Using the Calibration in a different product could cause it to experience paper advance problems.

After scanning the Calibration Pattern, it should be discarded. When loading the Calibration Pattern, use the Cutter blade on the Print Platen to align the edge of the sheet. If you follow this advice, you will prevent the cutter from cutting a section of the Calibration Pattern, which could cause the Calibration to FAIL.

22. The Touch Control Panel prompts you to select the paper category you used for the calibration. Select the same paper that you used to perform the Paper Advance Calibration print. Use the **Arrow** keys to scroll to your paper category and press the **OK** key to continue the paper load process.

23. The Touch Control Panel prompts you to select the specific type of paper you used for the calibration. Use the Arrow keys to scroll through the menu and the OK key to select your paper type.

24. Load the calibration pattern into the product and the Touch Control Panel displays the normal sheet loading procedure.

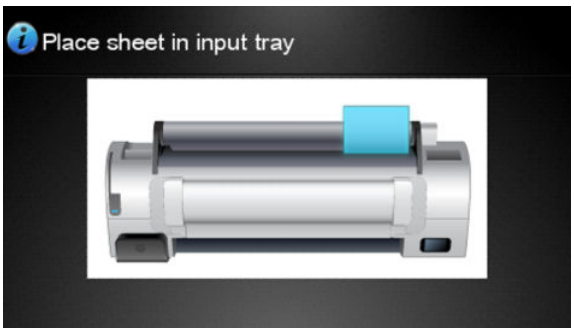

25. When the Calibration Pattern is successfully loaded the Touch Control Panel displays the following screen, press OK to start the scan.

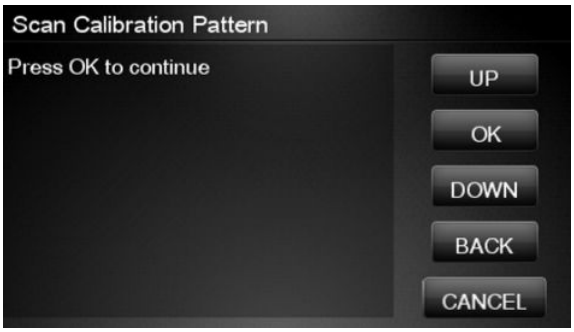

26. The Touch Control Panel displays the following screen. The product will scan the Calibration Pattern which could take several minutes. Once the calibration is completed successfully, the following message will be displayed on the Touch Control Panel. Press the OK key to continue.

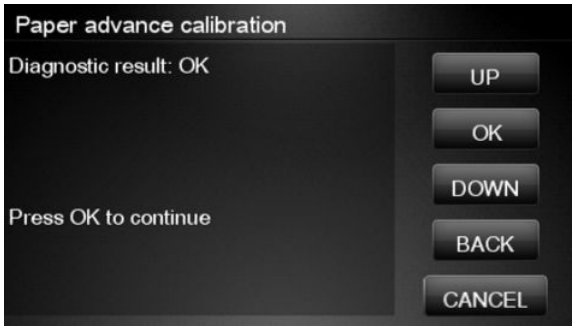

If the Paper Advance Calibration fails for any reason, a warning message will appear on the Touch Control Panel. In this case, try the following:

- Check that the Calibration Pattern was not incorrectly cut (trimming the actual pattern) during the paper load process. If this is the case, perform the Paper Advance Calibration again from **step 1**.
- Perform a Line Sensor Calibration. See Line Sensor Calibration on page 218.
- Replace the Line Sensor. See Line Sensor on page 413.
- If the problem continues, replace the Media Advance Driver. See Media Advance Drive on page 419.

Drop Detector Calibration

The purpose of this Service Calibration is to calibrate the Drop Detector (located in the Service Station) in relation to the Carriage Assembly. There are two menu options to calibrate the Drop Detector:

- Calibrate Drop Detector
- Reset Calibration Flag

Always perform the Reset Calibration Flag calibration BEFORE calibrating the drop detector.

Service calibrations also need to be performed after removing or replacing certain product components. If you have removed or replaced product components, check the Service Calibration Guide to Removal and Installation on page 267 to see which tests and calibrations you need to perform.

Reset Calibration Flag

Run this option before replacing the drop detector (service station), so that the product will not try to perform a drop detection until the new drop detector has been calibrated.

1. In the Service Calibrations submenu, select **Drop Detector calibration** and press **OK**.

2. In the Drop Detector Calibration menu, scroll to **Reset Calibration Flag** and press **OK**.

3. When the following message appears on the Touch Control Panel, you must select whether you would like to continue with the calibration by pressing the **OK** key. Press **Cancel** to exit the calibration.

4. The product resets the calibration flag. Press **OK** to return to the menu.

5. Shut down the product and replace the drop detector.

6. Start the product and calibrate the drop detector.

Calibrate Drop Detector

1. In the Service Calibrations submenu, scroll to **Drop Detector calibration** and press **OK**.

2. In the Drop Detector Calibration submenu, scroll to **Calibrate Drop Detector** and press **OK**.

3. Tthe following message is displayed on the Touch Control Panel, select the **OK** button.

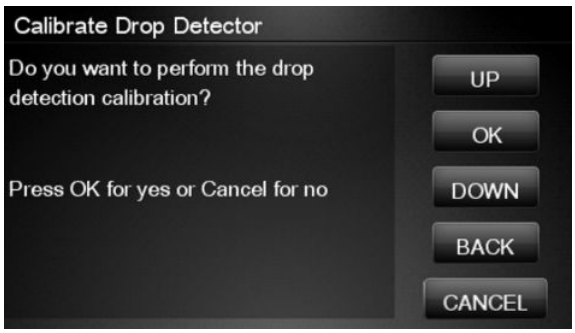

4. The product will start to calibrate the Drop Detector, which takes about 30 seconds.

5. Once the Drop Detector has been calibrated, the results will be displayed on the Touch Control Panel. Press **OK** to finish the calibration.

   The offset is the displacement from the nominal carriage position for doing the drop detection. width refers to values captured by the drop detector sensor. The offset should be within the valid range, and the window width should be at least the minimum shown. If the values are correct, press **OK** to accept them. If not, the drop detector is not correctly installed, either because the service station has not been correctly installed in the scan axis or because the drop detector is not correctly installed or not working properly. Press **Cancel** to reject the values.

   ⚠ CAUTION: Do not accept these values if they are not within the right range, as the product will not work properly.

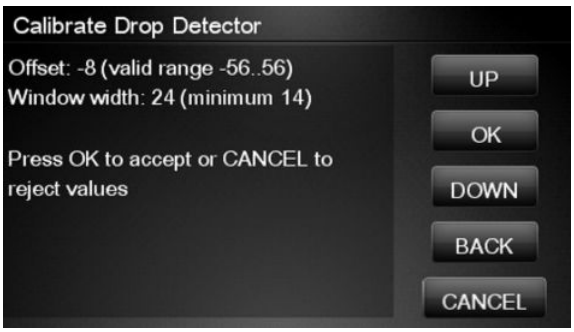

6. Press **OK** to end the calibration.

Line Sensor Calibration

The purpose of this Service Calibration is to calibrate the intensity of the line sensor in the Carriage PCA. An incorrect calibration can result in edge-detection failures during paper loading and incorrect reading of prints that are used for alignment or calibration.

Perform the Line Sensor Calibration in the following cases.

- If the edge detect procedure fails during paper loading.
- If the Carriage is disassembled or replaced.
- If the Line Sensor is disassembled or replaced.
- If banding is detected in prints.
- If misalignment between colors is detected.

Service calibrations also need to be performed after removing or replacing certain product components. If you have removed or replaced product components, check the Service Calibration Guide to Removal and Installation on page 267 to see which tests and calibrations you need to perform.

⚠ CAUTION: Keep your hands away from the Print Platen during calibration, as the Carriage moves at high speed and you could injure yourself or damage the Carriage Assembly.

The full calibration process

1. If possible, load a roll of glossy paper with a width of at least 24 inches into the product before starting the calibration. The product will later reject paper that is too narrow or not glossy.

2. In the Service Calibrations submenu, scroll to **Line Sensor calibration** and press **OK.**

3. When the following message appears on the Touch Control Panel, press the **OK** key to continue or the **Cancel** key to exit the calibration. If the product detects no paper, see The manual paper loading process on page 221.

4. The Touch Control Panel displays the following while the calibration is in progress.

5. The product calibrates the intensity of the LEDs and displays the results on the Touch Control Panel. Press **OK** to continue or press **Cancel** to exit the calibration.

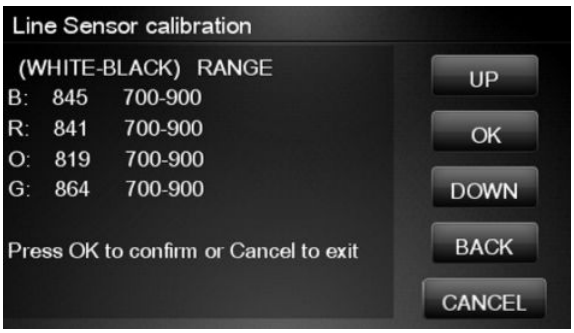

If the values are not within the range specified, an error appears on the Touch Control Panel. In this case, repeat the calibration from the beginning. If necessary, replace the Line Sensor.

6. The next step is to calibrate the Line Sensor position. The product prints a line of black dots and then scans them.

7. Once the Line Sensor position has been calibrated, the results are displayed on the Touch Control Panel. Press **OK** to continue or **Cancel** to exit.

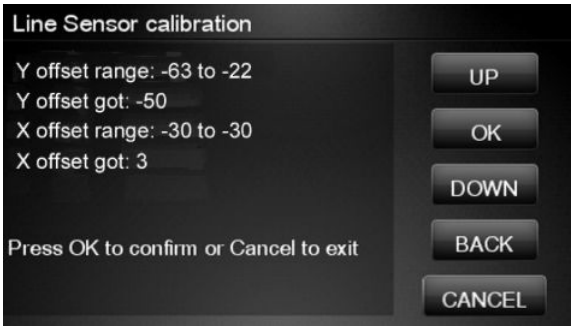

8. If the calibration fails or the values are out of range, try the following solutions.
   - Reseat the line sensor.
   - Repeat the calibration again from the beginning.
   - Replace the Line Sensor.

9. The product now tries to align the printheads. When the following message appears on the Touch Control Panel, press **OK** to continue or **Cancel** to exit.

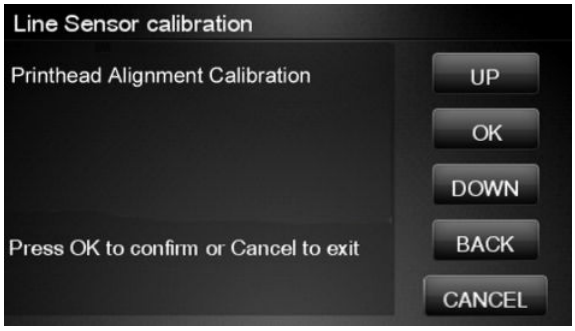

10. If printhead alignment cannot be completed, try the following.
    - Enter the Touch Control Panel menu and retry printhead alignment from there. If the alignment completes successfully, then perform color calibration.
    - If the alignment fails again, check the alignment pattern to see whether any of the printheads are printing incorrectly. If necessary, perform a printhead recovery through the Touch Control Panel and retry printhead alignment.
11. If the printhead alignment ends successfully, you have completed the full Line Sensor calibration process.

The manual paper loading process

1. If the product detects no paper, the following message is displayed. If you think you can load paper normally, press **Cancel** and resume the full calibration process (see The full calibration process on page 219). Otherwise, press **OK** to proceed with manual loading.

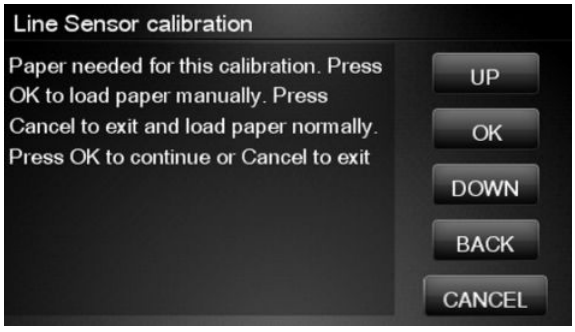

NOTE: The manual loading process performs only a partial calibration, after which you should try again to load roll paper and perform the full calibration.

2. The Touch Control Panel prompts you to load the paper manually.

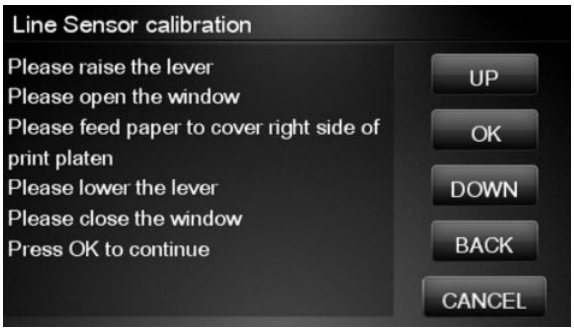

3. Feed a sheet of paper manually into the product (the product will not try to move it) until it fully covers the right-hand size of the print platen. It must cover the line sensor so that the product detects it. An A4 or US Letter paper size is sufficient.

4. When you have loaded the paper, press OK. The product starts the calibration process, and displays the results on the Touch Control Panel if successful. Press OK to continue.

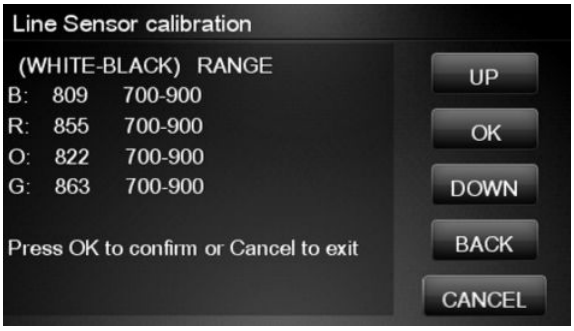

If the calibration fails, start again from the beginning. If necessary, try replacing the Line Sensor.

5. The Touch Control Panel asks you to unload the paper. It then reminds you to reload roll paper in the normal way and perform the full Line Sensor calibration (see The full calibration process on page 219).

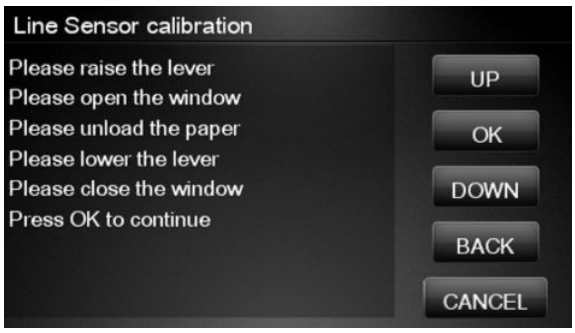

Calibrate Sheet Sensor

The purpose of this Service Calibration is to calibrate the sheet sensor. This sensor should be calibrated whenever a new sensor is installed. This calibration should also be performed if the following problems are encountered:

- While attempting to load roll media, if the Touch Control Panel prompts you to remove paper, although there is no paper in the path, calibrate sheet sensor.
- When attempting to load sheet paper from Touch Control Panel, if the printer repeatedly displays a paper skew message, and the sheet cannot be loaded, calibrate the sheet sensor.

1. In the Service Calibrations submenu, select **Calibrate sheet sensor**.

2. Remove paper from the sheet sensor and press **OK** to continue.

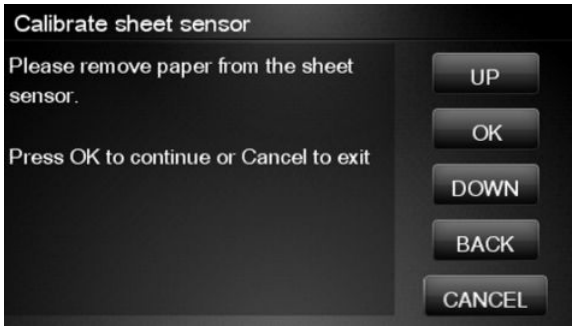

3. When you see the following message, insert sheet paper into the sheet sensor and press **OK** to continue.

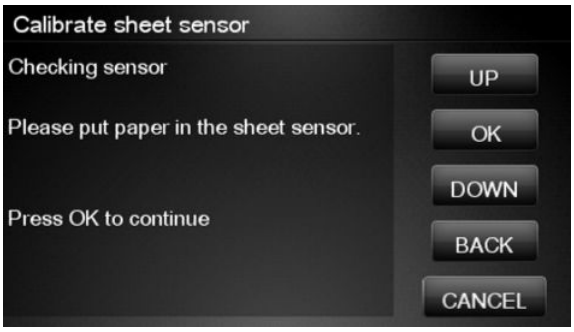

4. If the calibration was successful, a message appears such as the following. If you see an error message, check that the sheet sensor is connected, and retry the calibration.

Calibrate the Scanner

The purpose of this is to perform a full calibration of the scanner consisting of the following tests:

- Basic Calibration
- Alignment/stitching
- CLC matrix

NOTE: Before running the scanner calibration inspect that the calibration sheet is free dust, spots or stripes. Check that the calibration sheet is not dirty, wrinkled, scratched or folded before.

NOTE: Before running the scanner calibration open the scanner to inspect that the glass plate is free of dirt, dust and scratches. Clean the glass plate if necessary before proceeding.

1. In the Service calibrations submenu, scroll to the **Calibrate scanner** and press on this option

2. The Control Panel will then prompt you to load the calibration sheet.

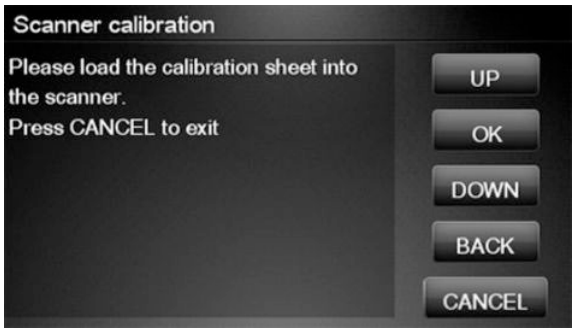

3. Hold the calibration sheet from both sides and place it facing the arrow in the centre of the sheet in front of the Page icon present on the input tray of the scanner. Push the sheet with both hands on both sides at the same time to load the sheet with no skew.

4. Press OK to continue with the test.

5. The Control Panel will then display a percentage with the progress of the calibration.

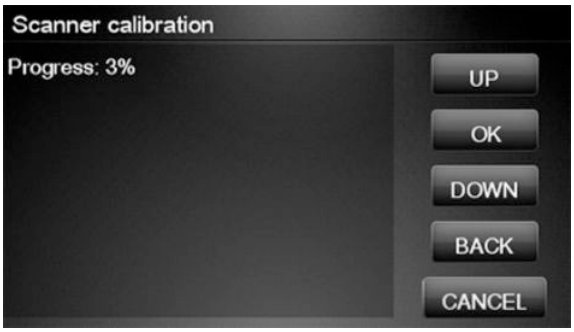

6. The Control Panel will then display a percentage with the progress of the calibration.

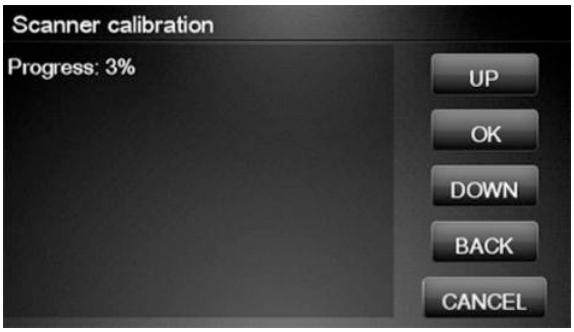

NOTE: If scanner calibration result is **FAIL** then:

- Check that the calibration sheet is in good condition according to previous note. Replace with a new one if necessary.
- Check that the glass plate is clean, see Cleaning the Glass Plate on page 548
- Check that the glass plate is in good condition and correctly installed. See Removal and Installation, Glass Plate on page 577

After the calibration, a set of files is saved in the CWS_calibration folder. If the calibration is performed again the files are overwritten. To retrieve the log files, Appendix C: Obtaining the product log and the diagnostics package on page 119

File name	CWS_Calibration folder
scanTRUSTresult.log	The results file. Contains: • The calculated corrections • Error codes (if any)
scanTRUST.log	The Log file. Primarily contains information that can help troubleshoot where an error has occurred.
BarCodeScan.tif	Scanned image of the barcode.
BarCodeScan_Marked.tif	A marked image of the barcode that has been read.
StitchArea_XX.tif	Imaged of CIS transition areas used for Alignment/Stitching calibration

NOTE: Diagnostic package (reduced level) will contain only all LOG and CON files. Extended diagnostic package (full level) will contain all files.

5 Parts and Diagrams

Product Support on page 230

Center Covers Front (1 of 3) on page 231

Center Covers Front (2 of 3) on page 232

Center Covers Front (3 of 3) on page 233

Roll Covers on page 235

Center Covers (Rear) on page 236

Right Cover on page 237

Left Cover on page 238

Right Hand Assemblies on page 239

Left Hand Assemblies on page 240

Carriage Assembly on page 242

Scan-Axis Assemblies on page 244

Paper Path Assemblies (Front) on page 245

Paper Path Assemblies (Rear) on page 246

Roll Supports on page 247

Scanner Parts (1 of 3) on page 249

Scanner Parts (2 of 3) on page 250

Scanner Parts (3 of 3) on page 251

Tools 1 on page 252

Tools 2 on page 253

Miscellaneous Parts on page 254

Introduction

The list of parts in this chapter include the notation (CSR A) or (CSR B) for parts that can be replaced by the customer. All other parts must be replaced by an engineer. See Customer Self Repair parts on page 265.

Product Support

	HP Part Number	Part Description	Cross-reference	Products Applicable
1	Q5669-60718	Leg Cover (CSR A) (Left & Right)		All
2	Q5669-60716	Leg Assembly (Left & Right)		All
3	CN727-60056	Stand Foot w/ extension w/ screw (x2)	-	T2300, Z5600
	Q5669-60715	Foot Assembly SV	-	T790, T795, T1300, Z5400, Z2600
4	Q6659-60237	Bin Assembly (includes Bin Support) (CSR A)	Bin Assembly on page 270	T1300-44"-2R, T2300, Z5600
	Q5669-60719			T790–24"
	CH639-69002			TT790-44"-2R, T795, Z5400
	T0B52-67011			Z2600
5	Q6659-60236	Cross-brace Assembly		T790-44"-1R, T795, T1300-44"-2R, T2300, Z5400, Z5600
	Q5669-60717			T790–24", Z2600
6	Q5669-67063	Basket Tube × 2 (CSR A)		All
	Q5669-60730	Hardware Kit (Includes screws for Legs Assembly) (CSR A)		T2300
7	CN727-60093	Stand Foot Extension (w/screw)	Foot Extension on page 572	T2300

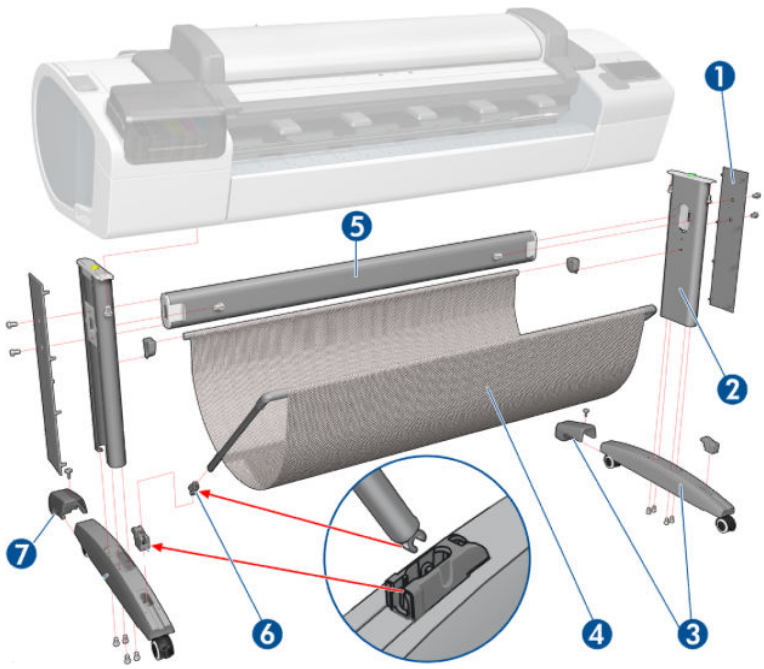

Center Covers Front (1 of 3)

	HP Part Number	Part Description	Cross-reference	Products Applicable
-	CH538–67071	Scanner Position sensor	Scanner Position Sensor (MFP only) on page 516	T2300
1	Q6687–60064	Front Cover	Front Cover on page 349	T2300
2	CN727–60052	Anti ESD Media Output Assy Carbonite	Media Output Assembly on page 430	T2300
3	CN727–60058	Scanner Cover Right	Right Scanner Cover (MFP only) on page 467	T2300
4	CN727–60059	Scanner Cover Left	Left Scanner Cover (MFP only) on page 409	T2300
5	CN727–60063	Front Top Cover Assy	Front Top Cover Assembly (MFP only) on page 350	T2300
6	CN727–60066	Front Deflector (incl. 2 pcs)	Front Deflector on page 573	T2300
7	CN727–60064	Latch Handle Cover	Latch Handle Cover on page 579	T2300
8	CN727–60060	Collar cover Right	Right Collar Cover (MFP only) on page 342	T2300
9	CN727–60062	Collar Cover Left	Left Collar Cover (MFP only) on page 402	T2300

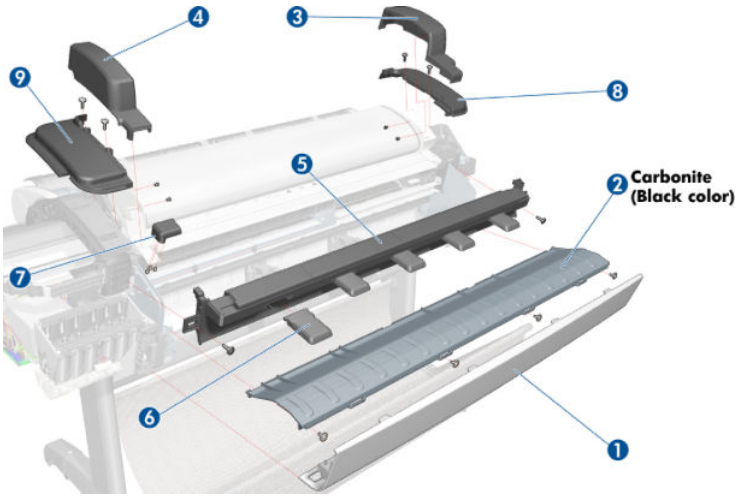

Center Covers Front (2 of 3)

	HP Part Number	Part Description	Cross-reference	Products Applicable
1	CN727–60068	Scanner Piston Gas Assy	Scanner Piston Gas (MFP only) on page 336	T2300
2	CN727–69004	Torsion Damper	Torsion Damper (MFP only) on page 521	T2300
3	CN727–60069	Scanner Bumper Assy (includes wrench #8 and allen key #10)	Scanner Bumper (MFP only) on page 339	T2300
4	CH538–67071	Position sensor	Scanner Position Sensor (MFP only) on page 516	T2300

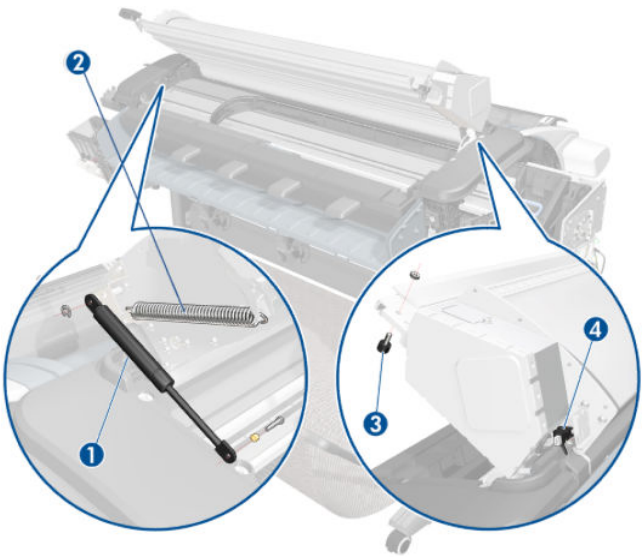

Center Covers Front (3 of 3)

	HP Part Number	Part Description	Cross-reference	Products Applicable
1	CR649–67001	T790 Window 44 SV	Window on page 536	T790-44”-1R, T795
	CR647–67002	T790 Window 24 SV		T790-24”
	CR651–67002	T1300 Window 44 SV		T1300-44”-2R, Z5400
2	CR647–67003	T790 Top Cover 24 SV	Front Top Cover on page 352	T790-24”
	CR649–67002	T790 Top Cover 44 SV		T790-44”-1R, T795
	CR651–67001	T1300 Top Cover SV		T1300-44”-2R
	E1L21–67003	Z5400 Top Cover SV		Z5400
	T0B52-67006	Z2600 Top Cover SV		Z2600
	T0B51-67020	Z5600 Top Cover SV		Z5600
3	CH538–67071	Window Position Sensor (with shield)	Window Position Sensor on page 540	All
4	Q6659-60089	Media Output Assembly 44” products	Media Output Assembly on page 430	T1300, T790-44”, T795, Z5400
	Q5669-60155	Anti-ESD Media Output Assembly 24”		T790-24”
	T0B51-67013	Anti-ESD Media Output Assembly 44"		Z5600
	T0B52-67010	Anti-ESD Media Output Assembly 24"		Z2600
5	Q6687-60064	Front Cover All 44” products	Front Cover on page 349	T790-44”-1R, T795, T1300, T2300
	Q6683-60201	Front Cover All 24” products		T790-24”
	Q6659-60165	Front Cover 44” SV		Z5400, Z5600
	T0B52-67014	Front Cover 24" SV		Z2600

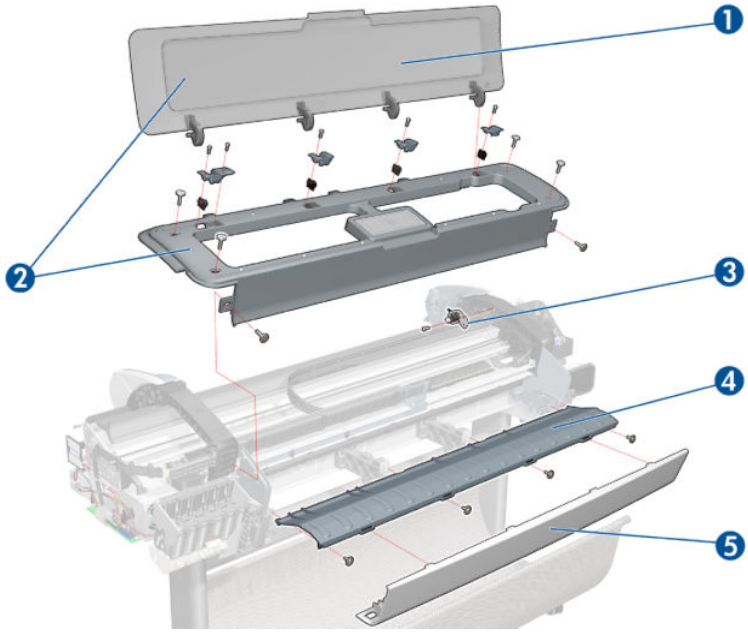
1
2
3
4
5

Roll Covers

	HP Part Number	Part Description	Cross-reference	Products Applicable
1	CH538-67003	Upper Roll Cover Assembly with pinches	Roll Cover, Upper on page 477	T790-44”-1R, T1300, T2300, Z5400, Z5600
	CQ305–60018	Upper Roll Cover Assembly Basic SV		T790-24”, Z2600
	CH539-67009	Upper Roll Cover Assembly Basic SV		T790-44”, T795
2	CH538-67002	Lower Roll Cover Assembly with pinches	Roll Cover, Lower on page 473	T1300, T2300, Z5400, Z5600
3	CH538-67037	Pinch Arm Assembly for Roll Cover (CSR A)	Pinch Arm Assembly on page 439	T1300, T2300, Z5400, Z5600
4	CH538-67050	Roll Cover Freewheel Assembly (CSR A)	Freewheel Assembly on page 372	T1300, T2300, Z5400, Z5600
5	CH538-67047	Roll Cover Bi-stable Springs Left and Right	Bi-stable Springs on page 273	T1300, T2300, Z5400, Z5600

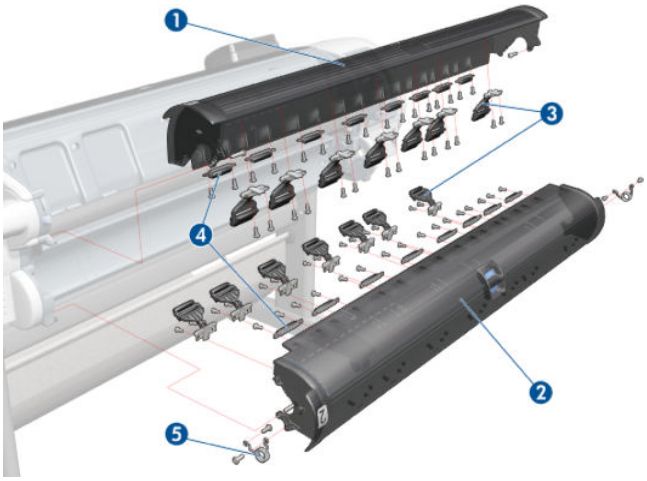

Center Covers (Rear)

	HP Part Number	Part Description	Cross-reference	Products Applicable
1	CN727–60091	Back Cover Assembly Carbonite	Rear Cover (MFP only) on page 457	T1300-44”-2R, T2300, Z5400, Z5600
	CQ305-60015	Rear Cover		T790–24”
	CH538-67012	Back Cover SV		T790-44”, T795
	T0B52-67002	Back Cover 24" SV		Z2600
2	CH538-67022	Converger Assembly	Converger on page 334	T1300-44”-2R, T2300, Z5400, Z5600
	CQ305-60019	Converger CR Assembly		T790-24”
	CH539-67010	Converger CR Assembly		T790-44”, T795
	T0B52-67003	Converger CR Assembly		Z2600
3	CN727–60047	Clean Out 44 new re carbon	Cleanout on page 328	T2300
	Q6683-67802	Cleanout 24 rev B		T790-24”, Z2600
	CH538-67039	Cleanout TT		T790-44”, T795, T1300, Z5400, Z5600
4	Q5669-67801	Out-of-paper Sensor	Out-of-paper Sensor on page 432	All
5	CN727–60092	Rear Deflector Parts	Rear Deflectors on page 461	T2300
6	CN727–60094	Rear Deflector Mylar Assembly (CSR A)	Rear Deflector Mylar on page 575	T2300

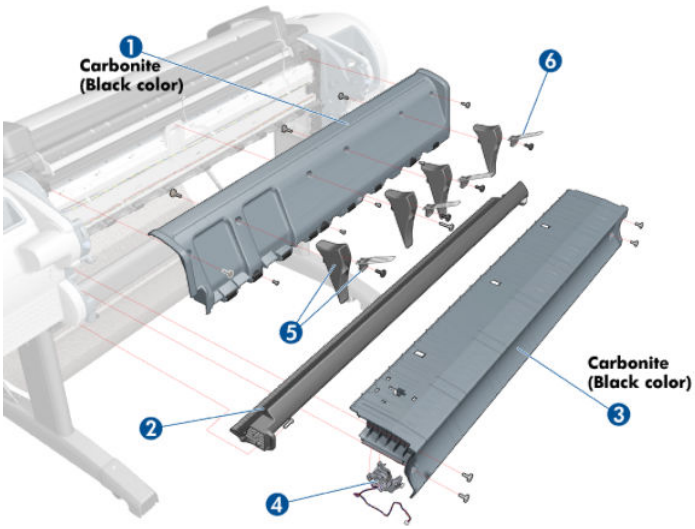

Right Cover

	HP Part Number	Part Description	Cross-reference	Products Applicable
1	CN727–60083	Right Cover (Without Right Ink Door Cover)	Right Cover on page 463	T1300, T2300
	CH539-67006	Right Cover		T790-24”
	CH538-67014	T1200 Right Cover		T790-44”, T795
	E1L21-67001	Case Right CH Assy SV (with the right ink door cover)		Z5400
	T0B51-67022	Case Right Assy SV		Z2600
	T0B52-67017	Case Right Assy 24in SV		Z5400
2	CN727–60053	Integrated Front Trim Carbonite (Left and Right)	Right Front Trim on page 375	All
	Q6675-60109	Integrated Front Trim (Left and Right)		T790-24”, T790-44”, T795
3	CN727–60074	Right Ink Door Cover (FP not included)	Right Ink Cartridge Door on page 382	T790, T795, T1300, T2300, Z5400
	T0B52-67001	Right Cover Door Assy SV		Z2600, Z5600
4	CN727–67019	Touch Control Panel	Touch Control Panel on page 533	T790, T795, T1300, T2300, Z5400

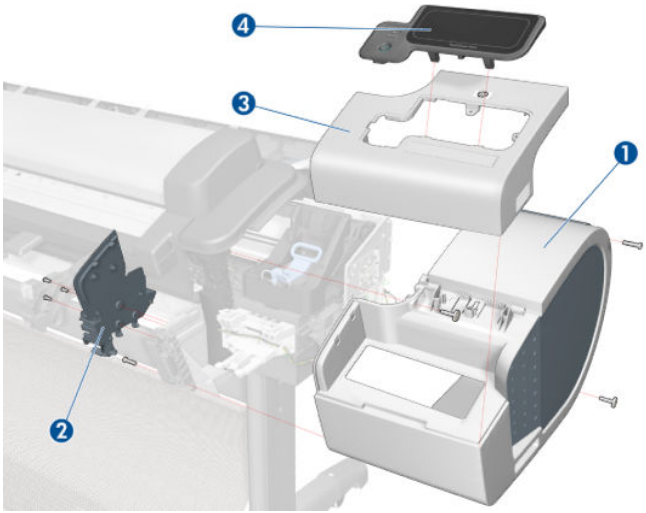

Left Cover

	HP Part Number	Part Description	Cross-reference	Products Applicable
1	CH538-67017	Left Ink Cartridge Door	Left Ink Cartridge Door on page 380	T795, T1300-44”-2R, T2300
	CH539-67008	Left Ink Cartridge Door		T790-24”, T790-44”
	CQ113-67006	Left Ink Cartridge Door		Z5400
	T0B51-67001	Left Ink Cartridge Door		Z2600, Z5600
2	CN727-60053	Integrated Front Trim L & R Carbonite)	Left Front Trim on page 407	All
	Q6675-60109	Integrated Front Trim (Left and Right)		T790-24”, T790-44”, T795
3	CH538-67005	Left Side Panel (CSR B)	Left Panel on page 435	T1300-44”-2R, T2300, Z2600
	CH539-67002	Left Side Panel (CSR B)		T790-24”, T790-44”, T795
	CQ113-67007	Left Side Panel SV		Z5400, Z5600
4	CN727-60050	Left Cover with ink Door Carbonite	Left Cover on page 403	T1300-44”-2R, T2300
	CH539-67005	Left Cover with Ink Door		T790-24”, T790-44”
	CH538-67013	Left Cover with Ink Door		T795
	E1L21-67009	Left Cover with Ink Door		Z5400
	T0B51-67006	Left Cover with Ink Door		Z2600, Z5600

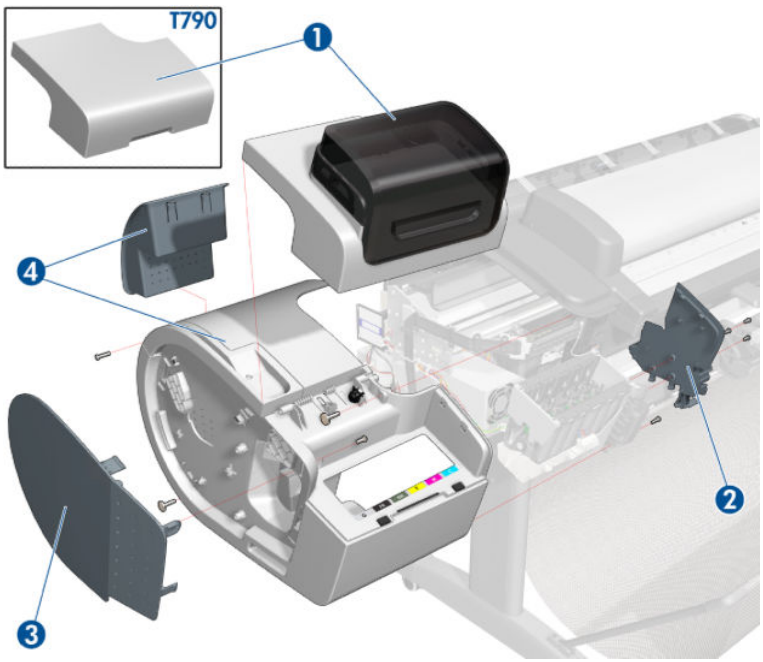

Right Hand Assemblies

	HP Part Number	Part Description	Cross-reference	Products Applicable
1	Q6675-60043	Carriage Rail Oiler	Carriage Rail Oiler on page 321	All
2	Q5669-67807	Pen to Paper Space (PPS) Solenoid	Pen to Paper Space (PPS) Solenoid on page 437	All
3	CH538-67076	Scan-Axis Motor	Scan-axis Motor on page 491	All
4	CH538-67040	Service Station (includes Drop Detector and Service Station Spittoon). Does not include Touch Control PanelHolder nor Cable holder located under the primer	Service Station on page 495	All (except Z5400, Z2600, Z5600)
	E1L21-67006	Service Station (includes Aerosol Fan).		Z5400
	T0B51-67023	Service Station (includes Aerosol Fan).		Z2600, Z5600
4	Q5669–60664	Aerosol Fan	Aerosol Fan Assembly on page 357	Z5400
4	E1L21-67033	Aerosol Fan with Cable	Aerosol Fan Assembly on page 357	Z2600, Z5600
4	E1L21-67032	Aerosol Fan Cable	Aerosol Fan Assembly on page 357	Z2600, Z5600
5	Q5669-60666	Drop Detector	Drop Detector on page 355	All
6	CN727–67020	Interconnect PCA	Interconnect PCA on page 400	All

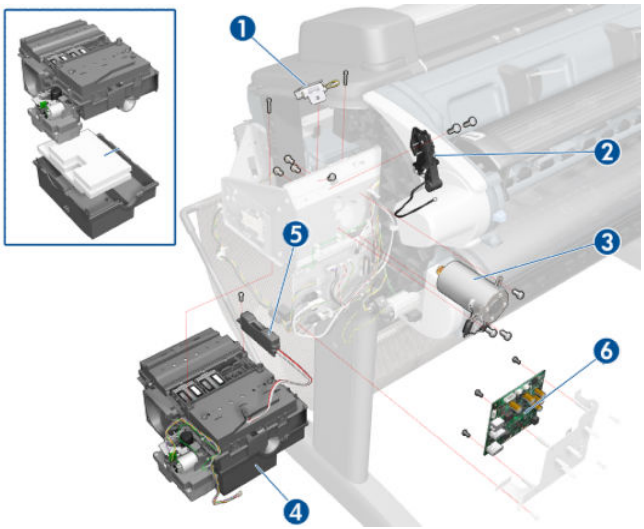

Left Hand Assemblies

	HP Part Number	Part Description	Cross-reference	Products Applicable
1	Q6683-60188	Left Ink Supply Station	Left Ink Supply Station on page 384	All (except Z5400, Z2600, Z5600)
	E1L21-67007	Left Ink Supply Station		Z5400
	T0B51-67004	Left Ink Supply Station		Z2600, Z5600
2	Q6718-67017	Starwheel Motor	Starwheel Motor on page 511	All
3	CK837-67020	Encoder Sensor	Encoder Disk and Encoder Sensor on page 364	All
4	Q5669-60702	Encoder Disk	Encoder Disk and Encoder Sensor on page 364	All
5	CH538-67027	Media Advance Transmission	Media Advance Drive on page 419	All
6	Q5669-67049	Left Spittoon	Spittoon, Left on page 503	T1300-44”-2R, T2300, Z5400, Z2600, Z5600
7	CR647–67010	Power Supply SV	Power Supply Unit on page 454	All
8	CR647-67011	Engine PCA w/PSU SV	EE Box on page 359	T790-24”, T790-44”-1R, T795, T1300-44”-2R, Z5400
	CN727-67018	Engine PCA w/PSU SV		T2300
	T0B51-67002	Engine PCA w/PSU SV		Z2600, Z5600
9	CN727-67042	Formatter w/o HDD	Formatter on page 370	T790-24”, T790-44”-1R, T795, T1300-44”-2R,T2300, Z5400, Z2600, Z5600
	E1L21-67017	Formatter with HDD Enc SV		Z5400ps rev.B
	CR647-67008	MSG Formatter with HDD SV		T790 rev.B, T1300 rev.B
	CN727-67029	T2300 Formatter with HDD SV		T2300 rev.B
10	CR647-67030	SATA HDD w/FW	Hard Disk Drive on page 378	T790-24”, T790-44”-1R, T795, T1300-44”-2R
	CN727-67017			T2300
	E1L21-67013	SATA HDD w/FW CH SV		Z5400
	T0B51-67007	SATA HDD w/FW		Z2600, Z5600
11	Q5669-60705	Media Lever	Media Lever on page 426	T790-24”, T790-44”-1R, T795, T2300, Z2600, Z5600
12	Q5669-60706	Media Lever Position Sensor	Media Lever Position Sensor on page 428	T2300
13	T0B51-67024	CryptoAsic PCA SV	EE Box on page 359	Z2600, Z5600

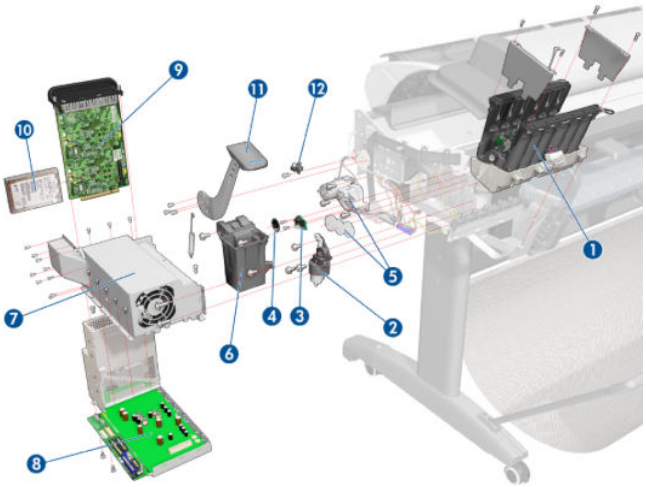
9
11
12
10
1
5
7
4
3
2
6
8

Carriage Assembly

	HP Part Number	Part Description	Cross-reference	Products Applicable
1	CH538-67044	Carriage with Cutter Assembly	Carriage and Cutter Assembly on page 303	All (except Z2600, Z5400, Z5600)
	E1L21-67020	Carriage with Cutter		Z5400
	T0B51-67010	Carriage w/o Cutter		Z2600, Z5600
2	CN727-67023	Cutter Assembly with Screw SV		T790, T795, T1300, T2300, Z5400
	Q5669-60713	Cutter	Cutter Assembly (Z2600/Z5600 only) on page 312	Z2600, Z5600
3	Q5669-60687	Carriage Rear Bushing	Carriage Bushing, Rear on page 314	All
4	CK837-67001	Carriage Latch	Carriage Cover and Carriage Latch on page 316	All
5	CK837-67002	Carriage Cover	Carriage Cover and Carriage Latch on page 316	All
6	CK837-67003	Carriage PCA Cover	Carriage PCA on page 323	T2300
7	CK837-67005	Carriage PCA	Carriage PCA on page 323	All
8	Q6683-67004	Line Sensor	Line Sensor on page 413	All (except Z2600, Z5400, Z5600)
	E1L21-67021	Signed Line Sensor	Line Sensor on page 413	Z5400
	T0B51-67011	Signed Line Sensor		Z2600, Z5600

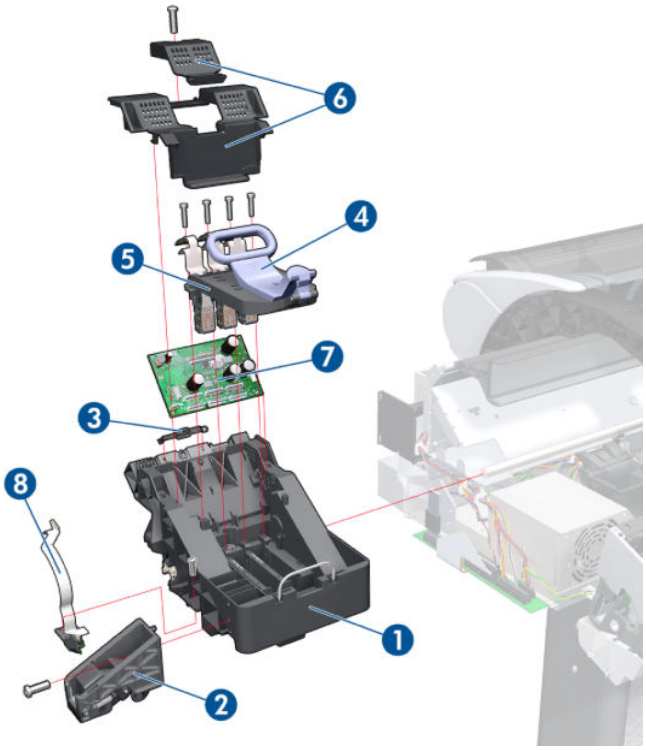
6
4
5
7
3
8
1
2

Scan-Axis Assemblies

	HP Part Number	Part Description	Cross-reference	Products Applicable
1	CK839-67005	Encoder Strip (including Encoder Strip Spring and Nut)	Encoder Strip, spring and attachment nut on page 367	T790-44”-1R, T795, T1300-44”-2R, T2300, Z5400, Z5600
	TW815-67040			T790-24”, Z2600
2	CH538-67018	Belt Assembly with Belt Tensioner (3)	Belt Assembly on page 269	T790-44”-1R, T795, T1300-44”-2R, T2300, Z5400, Z5600
	CQ305–60016			T790-24”, Z2600
3	CN727-60097	Tube System with Trailing Cable and ferrite parts	Ink Supply Tubes & Trailing Cable on page 389	T790-44”-1R, T1300-44”-2R, T795, T2300
	CR647-67004	Tubes System 24		T790-24”
	E1L21-67008	Tubes System 44 Assy Z		Z5400
	T0B51-67005	Tubes system SV 44" with Trailing Cable		Z5600
	T0B52-67008	Tubes system SV 24" with Trailing Cable		Z2600

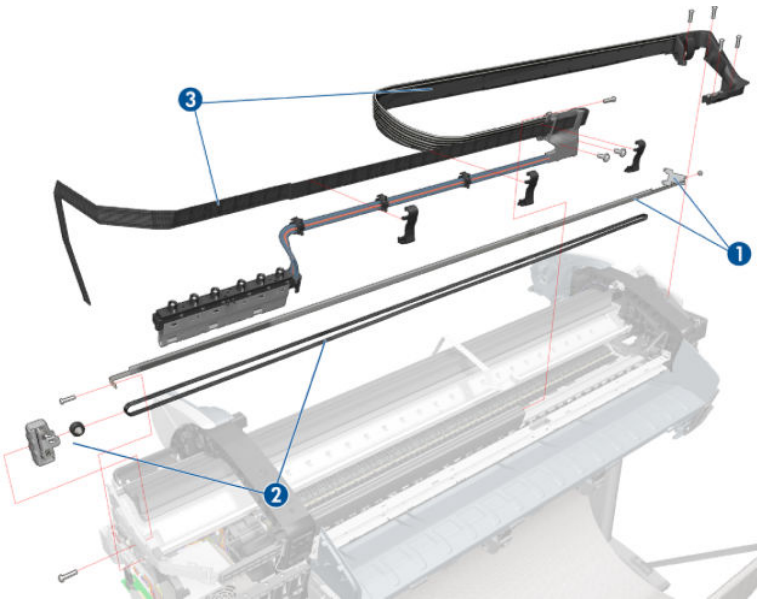

Paper Path Assemblies (Front)

	HP Part Number	Part Description	Cross-reference	Products Applicable
1	Q6687-60060	Starwheel Assembly	Starwheel Assembly on page 504	T790-44”-1R, T795, T1300-44”-2R, T2300, Z5400, Z5600
	Q6683-60196	Starwheel Assembly		All 24-in models
2	Q6677-60018	Print Zone Overdrive	Print Zone Overdrive on page 450	T790-44”-1R, T795, T1300-44”-2R, T2300, Z5400
	Q6675–60042			T790-24”
	T0B51-67014	Print Zone Overdrive 44"		Z5600
	T0B52-67012	Print Zone Overdrive 24"		Z2600
3	Q5669-67054	Starwheel Support Assembly		All (except Z5400, Z2600, Z5600)
	Q6718-67013	Starwheel Support Assembly		Z5400, Z2600, Z5600
4	Q6659-60182	Full Bleed Foam Kit	Full Bleed Foam on page 377	T790-44”-1R, T795, T1300-44”-2R, T2300, Z5400, Z2600, Z5600
	Q5669–60701	Full Bleed Foam Kit		T790-24”
5	CH538-67064	Bumper Cutter Actuator (Left and Right)		T2300

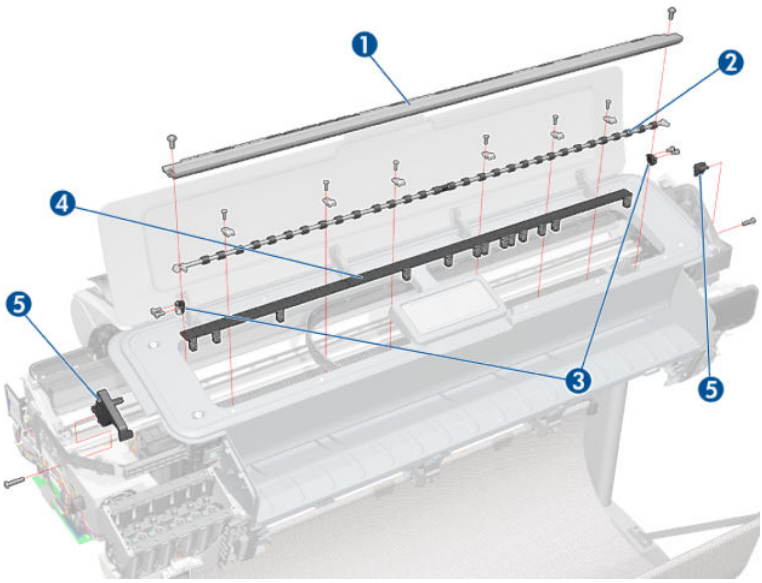

Paper Path Assemblies (Rear)

	HP Part Number	Part Description	Cross-reference	Products Applicable
1	Q6687-60085		Pinchwheel Assembly on page 442	All (except Z5400, Z2600, Z5600)
	Q6718-67006	Pinch Wheel Roller (Individual Module)		Z5400
	T0B51-67015	Pinchwheel Assembly		Z2600, Z5600
2	Q6677-60019	Left Roll Guide	Left Roll Guide on page 479	T790-44”-1R, T795, T1300-44”-2R, T2300, Z5400, Z5600
3	Q6687-67001	Spindle (CSR A)	Spindle on page 502	T790-44”-1R, T795, T1300-44”-2R, T2300, Z5400, Z5600
	CQ305-60020	Spindle (CSR A)		T790-24”, Z2600
4	Q6675-60044	Right Roll Guide	Right Roll Guide on page 480	T790-44”-1R, T795, T1300-44”-2R, T2300, Z5400, Z5600
5	Q6675-60093	3-inch Core Adaptors (2)	Right Roll Guide on page 480	T790-44”-1R, T795, T1300-44”-2R, T2300, Z5400

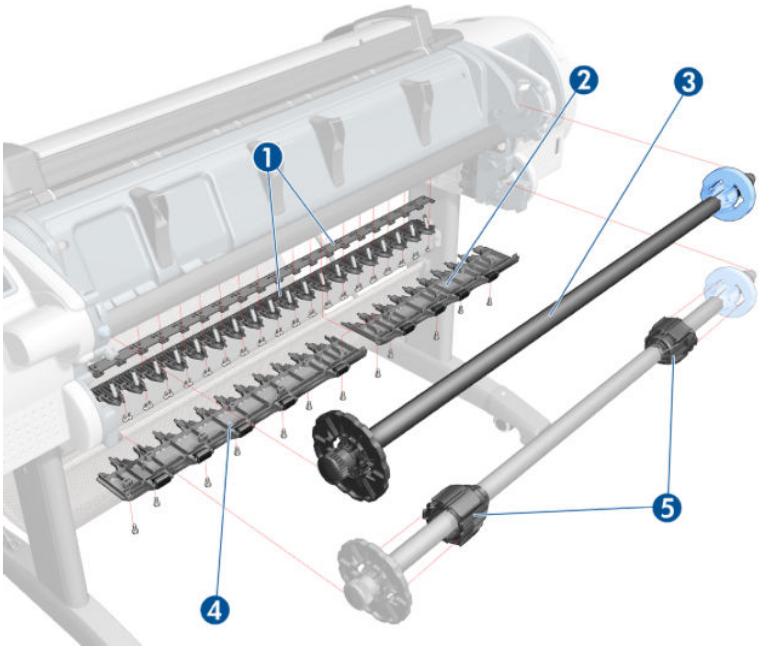

Roll Supports

	HP Part Number	Part Description	Cross-reference	Products Applicable
1	CR651–67007	Upper Right Roll Cover Support Carbonite	Roll Support, Upper Right on page 489	T1300-44”-2R, T2300
	CR647–67006	Upper Right Support		T790-24”, T790-44”, T795
	E1L21–67004	Upper Right Support	Roll Support, Upper Right on page 489 — To replace, refer to procedure for T1300	Z5400, Z2600, Z5600
2	CN727-60045	Upper Left Roll Cover Support Carbonite	Roll Support, Upper Left on page 487	T1300-44”-2R, T2300
	CH539-67007	Upper Left Support without Sensor		T790-24”, T790-44”, T795
	E1L21-67005	Upper Left Roll Support with Sensor	Roll Support, Upper Left on page 487 — To replace, refer to procedure for T1300	Z5400, Z2600, Z5600
3	CH538-67065	Upper Left Support Sensor with Cable	Roll Support Sensor, Upper Left on page 486	T1300-44”-2R, T2300, Z5400, Z5600
4	CH538-67046	Wall Spacers, Left and Right	Wall Spacers on page 513	All
5	CH538-67041	Lower Left Support Sensor with Cable	Roll Support Sensor, Lower Left on page 485	T1300-44”-2R, T2300, Z5400, Z5600
6	CN727-60049	Lower Left Roll Cover Support Carbonite	Roll Support, Lower Left on page 481	T2300
	CH538-67016	Lower Left Roll Cover Support Carbonite		T1300
	E1L21-67023	Low Left Support SV		Z5400, Z5600
7	CH538-67052	Lower Roll Support Bumpers, Left and Right	Roll Cover Bumpers, Lower on page 470	T1300-44”-2R, Z5400, Z5600
8	CH538-67051	Upper Roll Support Bumpers, Left and Right (CSR A)	Roll cover upper bumpers on page 568	All
9	CN727-60048	Lower Right Roll Cover Support Carbonite	Roll Support, Lower Right on page 483	T2300
	CH538-67029	Lower Right Roll Cover Support Carbonite		T1300-44”-2R
	E1L21-67014	Lower Right Support		Z5400, Z5600
10	CH538-67033	Single Sheet Sensor	Single-sheet Sensor on page 500	All

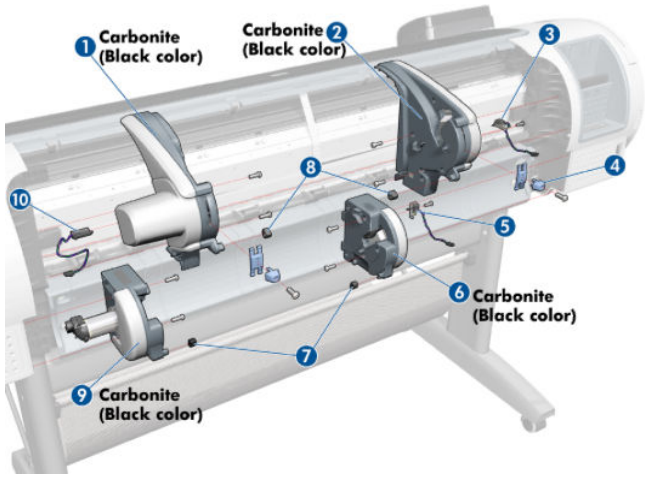
1 Carbonite (Black color)
Carbonite 2 (Black color)
3
4
5
6 Carbonite (Black color)
7
8
9 Carbonite (Black color)
10

Scanner Parts (1 of 3)

	HP Part Number	Part Description	Cross-reference	Products Applicable
1	CN727-69005	Glass Plate	Glass Plate on page 577	T2300
2	CN727-69010	Individual CIS Element	CIS Element (MFP only) on page 524	T2300
3	CN727–69003	Scanner Media Sensors: Sensor R, Sensor G, Sensor B and Sensor L	Scanner Exit Media Sensors (MFP only) on page 525	T2300
4	CN727–69002	Pressure Rollers	Pressure Rollers (MFP only) on page 527	T2300
-	CN727–69006	Calibration Sheet (also includes a cleaning cloth)		T2300

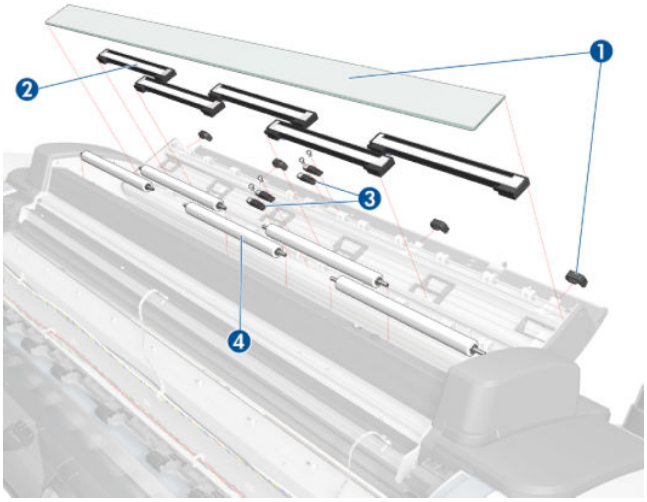

Scanner Parts (2 of 3)

	HP Part Number	Part Description	Cross-reference	Products Applicable
1	CN727–69009	Scanner Controller Board (SCU)	Scanner Controller Board (MFP only) on page 528	T2300
2	CN727-69001	Stepper Motor w. Encoder Sensor and belt	Scanner Motor Assembly (MFP only) on page 530	T2300
—	CN727–69007	Power/Reset/Awake Cable		T2300
—	CN727–69008	Cable USB		T2300

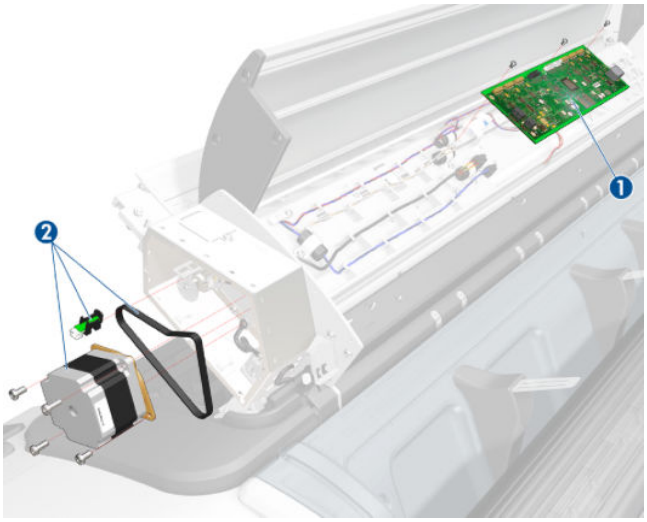

Scanner Parts (3 of 3)

	HP Part Number	Part Description	Cross-reference	Products Applicable
1	CN727-67026	Latch Assy and Hook SV	Scanner Latch and Hook Assembly (MFP only) on page 411	T2300

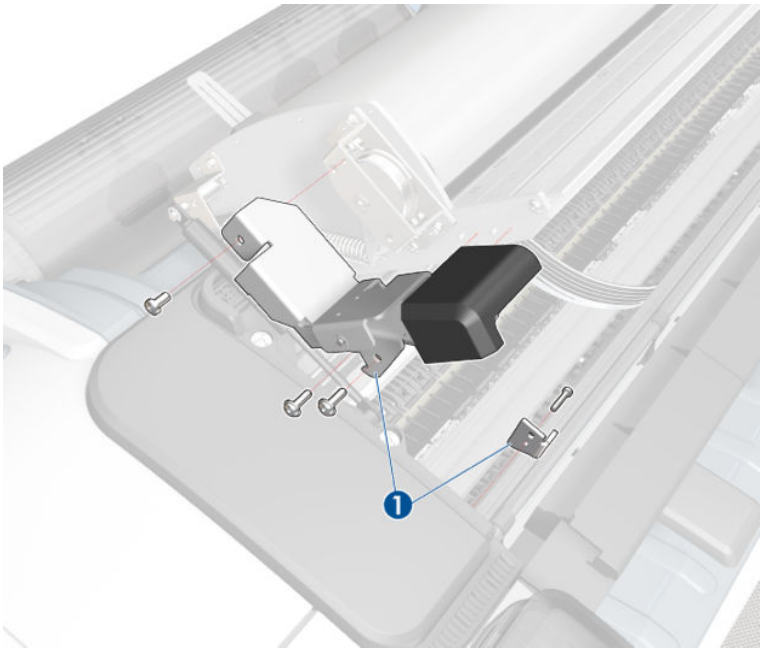

Tools 1

	HP Part Number	Part Description	Products Applicable
1	Q6675-67018	Media Driver Tool Kit (includes the Handle for Media Driver Tool Support and the Media Driver Adjustment Tool)	All
2	Q5669-60690	Flex Contacts Cleaning Tool (CSR A)	All
3-4	Q6687-60084	Pinchwheel Insertion Tool	All

1

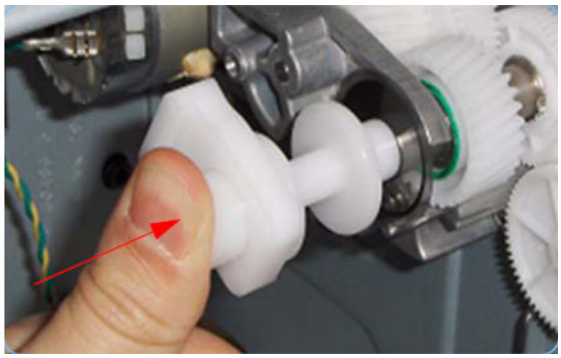

2

3

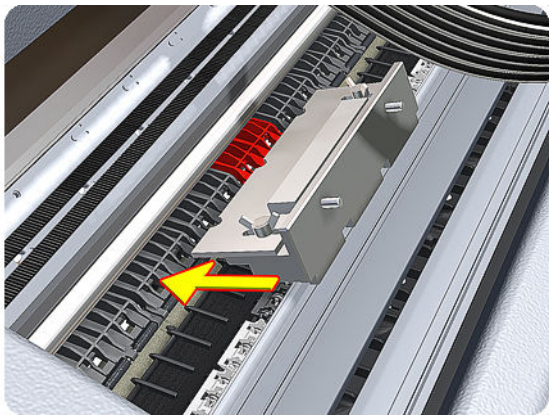

4

Tools 2

	HP Part Number	Part Description	Products Applicable
5	Q6675-67017	Spanner Tool	All
6	Q6683-67001	Tool Kit (includes pinchwheel alignment tool, paper driver tool, spanner # 13, oil dispenser, insert spring tool, tweezers, T15 screwdriver, 100 cc isopropyl alcohol, lubricant oil, plastic gloves, flex contacts cleaning tool and cleaning kit)	T2300
7	Q5669-60692	Lubrication Kit (CSR A)	T2300
8	CH538-67047	Bi-stable Spring Left and Right	T1300-44”-2R, T2300, Z5400, Z5600

5

6

7

8

Miscellaneous Parts

HP Part Number	Part Description	Products Applicable
E1L21-67032	Aerosol Fan Cable (snoopy power cable included)	Z5400, Z2600, Z5600
CH538-67006	Engine Cables 2-roll 44" Kit **Cables included** • CH538-50001: TT Mechatronic Data Harness (A) • CH538-50002: TT Mechatronic Power Harness (B) • CH538-50003: TT Engine Harness (C) • CH538-50012: TT Front Panel Cable • CH538-60049: TT Top Rewinder Encoder Cable • CK836-40002: Cable tie black • CN727-20015: Spiral Wrap PE 160 mm • Q6675-50002: ISS Cable Harness Left with ferrite (D) • 9170-2481: Corona-ferrite ribbon core roh • Q5669-60598: ISS Cable Harness Left 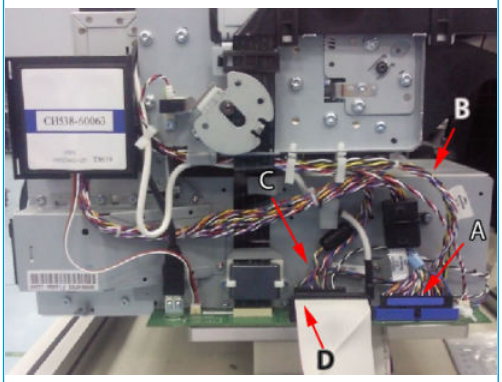	T1300-44”-2R, T2300, Z5400, Z5600
CH539-67003	Engine Cables 1-Roll 44-in Kit: The following Cables are included: • CH538-50003:TT Engine Harness • CH538-50012:TT Touch Control PanelC • CH538-60049: TT Top Rewinder Encoder Cable • CH539-50002: TT MINUS Mechatronic Power Ha • CH539-50003: TT MINUS Mechatronic Data Harn • Q6675-50002: ISS Cable Harness Left with fe	T790-44”1R, T795

HP Part Number	Part Description	Products Applicable
CQ305-60014	Engine Cables 1-Roll 24-in Kit: The following Cables are included: • CH538-50003: TT Engine • CH538-60049: TT Top Rewinder Encoder • CQ305-50001: TT 24 FRONT PANEL • TT 24 MECHATRONIC POWER • CQ305-50003: TT 24 MECHATRONIC DATA • Q6675-50002: ISS Cable Harness Left with ferrite	T790-24"1R
T0B52-67015	Engine Cables 1-Roll 24-in Kit: The following Cables are included: • CH538-50003: TT Engine • CH538-60049: TT Top Rewinder Encoder • CQ305-50001: TT 24 FRONT PANEL • TT 24 MECHATRONIC POWER • CQ305-50003: TT 24 MECHATRONIC DATA • Q6675-50002: ISS Cable Harness Left with ferrite • 9170-2409, Core-Split Shielding Bead ROHS • T0B52-50001, Cable SNP PWR SW	Z2600
E1L21-67034	Interconnect Cables Kit 44in Cables and included • 1400-0719: Cable tie • 9170-2158: Core-Ferrite Ribbon Core Rohs • CK837-40005: Holder_TC_ferrite • CN727-50001: Cable USB Engine to Interconnect • CN727-50003: Cable USB Interconnect to Ext Host • CN727-50004: Cable USB Interconnect to FP • CN727-50008: Cable Power-Data Interconnect to FP • CN727-50009: Cable Interconnect to Power Switch • CN727-50010: Cable Micci2 Engine to Interconnect • CN727-50021: USB Grounding Gasket Cable	T790-44"-1R, T795, T1300-44"-2R, T2300, Z5400, Z5600

HP Part Number	Part Description	Products Applicable
CR647-67001	Interconnect Cables 24-in Kit: The following Cables are included: • 1400-0719: CABLE TIE .062-1.125-DIA .14-W • 9170-2158: CORE-FERRITE RIBBON CORE ROH • 9170-2364: CORE-SPLIT SHIELDING BEAD ROHS • 9170-2408: CORE-SHIELDING BEAD ROHS • CK837-40005: Holder_TC_ferrite • CN727-50003: Cable USB Interconnect to Ext Ho • CN727-50004: Cable USB Interconnect to FP • CN727-50008: Cable Power-Data Interconnect to • CN727-50009: Cable Interconnect to Power Switch • CN727-50021: USB Grounding Gasket Cable • CR647-50001: USB Cable from Main PCA to Int • CR647-50002: Power Cable from Main to Inter • CR647-50003: Micci2 Engine to Interconnect – 24 • CR647-80003: LABEL-SECURITY	T790-24”1R
T0B52-67004	Interconnect Cables 24-in Kit	Z2600
CN727-60084	Serial Number Label (CSR A)	All (except Z2600, Z5600)
T0B51-67003	Serial Number Label (CSR A)	Z2600, Z5600
CH538-67024	Preventive Maintenance Kit #1. See Preventive Maintenance chapter for details about maintenance kit contents	T790-44”-1R, T795, T1300-44”-2R, T2300
CH538-67040	Preventive Maintenance Kit #2. See Preventive Maintenance chapter for details about maintenance kit contents	T790, T795, T1300, T2300
E1L21-67015	Preventive Maintenance Kit #1. See Preventive Maintenance chapter for details about maintenance kit contents	Z5400
E1L21-67006	Preventive Maintenance Kit #2. See Preventive Maintenance chapter for details about maintenance kit contents	Z5400
T0B52-67016	Preventive Maintenance Kit #1. See Preventive Maintenance chapter for details about maintenance kit contents	Z2600
T0B51-67008	Preventive Maintenance Kit #1. See Preventive Maintenance chapter for details about maintenance kit contents	Z5600
T0B51-67023	Preventive Maintenance Kit #2. See Preventive Maintenance chapter for details about maintenance kit contents	Z2600, Z5600

HP Part Number	Part Description	Products Applicable
Q5669-60722	Preventive Maintenance Kit #3. See Preventive Maintenance chapter for details about maintenance kit contents	Z2600, Z5600
CQ305-60017	Preventive Maintenance Kit #1. See Preventive Maintenance chapter for details about maintenance kit contents	T790-24
Q6687-60093	Paper Advance Calibration Kit (CSR A)	All
Q6675-67004	Ink System Purgers (6 units) (CSR A)	All
Q6675-67005	Ink System Purgers (100 units)	All
CH538-67005	Left Side Panel SV	All
CQ533-60001	Europe Power Cord SV kit	All
CQ533-60002	America Power Cord SV kit	All
CQ533-60003	Asia Power Cord SV kit	All
CR647-67005	Support Label T790 Nameplate	T790
CR648-67001	Support Label T790 PS Nameplate	T790ps
CR649-67007	Support Label T795 Nameplate	T795
CR651-67003	Support Label T1300 Nameplate	T1300-44”-2R
CR652-67001	Support Label T1300 PS Nameplate	T1300ps
CN727-67040	Support Label T2300 nameplate	T2300
CN728-67001	Support Label T2300ps nameplate	T2300ps
E1L21-67002	Support Label Z nameplate	Z5400
CQ305-60017	Preventive Maintenance Kit 1 • CH538-67044: Carriage with Cutter Assembly SV • CH538-60141: Scan Axis Motor SV • CK837-67014: T1120/620 Ink Supply Tubes 24 • CQ305-60016: T770 Belt 24 SV	T790-24”

6 Removal and Installation

- Introduction on page 262
- Service Calibration Guide to Removal and Installation on page 267
- Aerosol Fan Assembly on page 357
- Belt Assembly on page 269
- Bin Assembly on page 270
- Bi-stable Springs on page 273
- Bumpers, Left and Right on page 279
- Carriage and Cutter Assembly on page 303
- Cutter Assembly (Z2600/Z5600 only) on page 312
- Carriage Bushing, Rear on page 314
- Carriage Cover and Carriage Latch on page 316
- Carriage Rail Oiler on page 321
- Carriage PCA on page 323
- CIS Element (MFP only) on page 524
- Cleanout on page 328
- Converger on page 334
- Drop Detector on page 355
- EE Box on page 359
- Encoder Disk and Encoder Sensor on page 364
- Encoder Strip on page 366
- Encoder Strip, spring and attachment nut on page 367
- Engine Cables Kit on page 283
- Formatter on page 370
- Freewheel Assembly on page 372

- Front Cover on page 349
- Front Top Cover Assembly (MFP only) on page 350
- Front Top Cover on page 352
- Full Bleed Foam on page 377
- Hard Disk Drive on page 378
- Ink Supply Tubes & Trailing Cable on page 389
- Ink Supply Tubes Support Rail on page 398
- Interconnect Cables Kit on page 295
- Latch Handle Cover on page 579
- Left Collar Cover (MFP only) on page 402
- Left Cover on page 403
- Left Ink Cartridge Door on page 380
- Left Ink Supply Station on page 384
- Left Front Trim on page 407
- Left Panel on page 435
- Left Scanner Cover (MFP only) on page 409
- Line Sensor on page 413
- Media Advance Drive on page 419
- Media Lever on page 426
- Media Lever Position Sensor on page 428
- Media Output Assembly on page 430
- Out-of-paper Sensor on page 432
- Pen to Paper Space (PPS) Solenoid on page 437
- Pinch Arm Assembly on page 439
- Pinchwheel Assembly on page 442
- Print Zone Overdrive on page 450
- Power Supply Unit on page 454
- Pressure Rollers (MFP only) on page 527
- Real-time Clock Battery on page 456
- Right Collar Cover (MFP only) on page 342
- Right Front Trim on page 375

- Right Ink Cartridge Door on page 382
- Rear Cover (MFP only) on page 457
- Rear Cover on page 460
- Rear Deflectors on page 461
- Right Scanner Cover (MFP only) on page 467
- Right Cover on page 463
- Roll Cover Bumpers, Lower on page 470
- Roll Cover, Lower on page 473
- Roll Cover, Upper on page 477
- Left Roll Guide on page 479
- Right Roll Guide on page 480
- Roll Support, Lower Left on page 481
- Roll Support, Lower Right on page 483
- Roll Support Sensor, Lower Left on page 485
- Roll Support Sensor, Upper Left on page 486
- Roll Support, Upper Left on page 487
- Roll Support, Upper Right on page 489
- Scan-axis Motor on page 491
- Scanner Piston Gas (MFP only) on page 336
- Scanner Position Sensor (MFP only) on page 516
- Scanner Bumper (MFP only) on page 339
- Service Station on page 495
- Single-sheet Sensor on page 500
- Spindle on page 502
- Spittoon, Left on page 503
- Starwheel Assembly on page 504
- Starwheel Lifter, Left on page 506
- Starwheel Lifter, Right on page 508
- Starwheel Motor on page 511
- Scanner Controller Board (MFP only) on page 528
- Scanner Entry Media Sensors (MFP only) on page 526

- Scanner Exit Media Sensors (MFP only) on page 525
- Scanner Latch and Hook Assembly (MFP only) on page 411
- Scanner Motor Assembly (MFP only) on page 530
- Taco Sensor (MFP only) on page 531
- Torsion Damper (MFP only) on page 521
- Touch Control Panel on page 533
- Wall Spacers on page 513
- Window on page 536
- Window Position Sensor on page 540

Introduction

This chapter is a step-by-step guide to the removal and installation of the key components of the product. You may find it useful to check off the steps as they are performed. Use the illustrations for each procedure to identify the parts referred to in the text.

Some of the procedures have a video available which can be downloaded. When a video is available the following graphic is shown. Click on the graphic to download the video. These videos and others, are also available from the **Service Media Library**.

The Service Media Library is available through the following links:

- HP Employees and contingent workers: http://thesml.hp.com
- HP Channel partners, external call centers (requires registration):http://h20181.www2.hp.com/plm
- HP Customers:http://www.hp.com/go/sml

NOTE: Before using this chapter to remove and install a new component, always make sure that you have performed the relevant service test from Chapter 4. If the test passes you will not need to replace the component.

Safety Precautions

Review the instructions identified by WARNING and CAUTION symbols before you service the product. Follow these warnings and cautions for your protection and to avoid damaging the product.

NOTE: Serious shock hazard leading to death or injury may result if you do not take the following precautions:

- Ensure that the ac power outlet (mains) has a protective earth (ground) terminal.
- Switch the product off, and disconnect it from the power source prior to performing any maintenance.
- Prevent water or other liquids from running onto electrical components or circuits, or through openings in the module.

Electrostatic Discharge (ESD) Precautions

To prevent damage to the product's circuits from high-voltage electrostatic discharge (ESD):

1. Do not wear clothing that is subject to static build-up.
2. Do not handle integrated circuits (ICs) in carpeted areas.
3. Do not remove an IC or a printed circuit assembly (PCA) from its conductive foam pad or conductive packaging until you are ready to install it.
4. Ground (earth) your body while disassembling and working on the product.
5. After removing a cover from the product, attach an earthing (ground) lead between the PCA common and earth ground. Touch all tools to earth ground to remove static charges before using them on the product.
6. After removing any PCA from the product, place it on a conductive foam pad or into its conductive packaging to prevent ESD damage to any ICs on the PCA.

Required Tools

All the special tools and equipment required to disassemble, service and repair the product are provided in the Toolkit P/N Q6683-67001. Some tools can be ordered separately from the toolkit. See Tools 1 on page 252 and Tools 2 on page 253.

The Toolkit contains the following tools:

Description/Comments	HP Part Number
13 mm Combination Spanner	Q6675-67011
Alcohol	Q6675-60091
Allen Key #2	Q6675-60041
Cleaning Cloth	9300-2531
Flex Contacts Cleaning Support	Q1271-40384
Lubricant Oil	Q6675-60090
Media Driver Adjustment Tool	Q6675-67009
Handle for Media Driver Tool Support	Q6675-67010
Spanner	Q6675-67011
Oil Dispenser	Q6675-60062
Manual Pinch Arm Alignment Tool	Q5669-20595
Spring Insertion Tool	Q5669-20594
Protective Plastic Gloves	Q6675-60035
Screwdriver	8710-2456

Description/Comments	HP Part Number
Tweezers	Q6675-60037
T Series Cleaning Assembly	C6071-60218

You will also need the following standard hand tools:

Description/Comments	Size
Long Torx Screwdriver	1/4 inch drive
Torx Bit (75 mm)	8
	10
	15
	20
Philips Screwdriver	1
Pliers	N/A
Snips	N/A
Pipe Spanner	5.5 mm
Flat-bladed Screwdriver	N/A

Customer Self Repair parts

Some product parts are designated Customer Self Repair (CSR) parts, which means that a faulty part can be replaced by the customer. Non-CSR parts need to be replaced by an engineer. There are two categories of CSR parts:

- CSR A: Customer self-repair is mandatory, as mentioned in the product's warranty statement. If HP is asked to replace such parts, the customer will be charged for travel and labor costs. Parts should be replaceable by end users (customers) from a mechanical perspective within 5 minutes, with simple or no tools required. Examples include spindles and cartridges.
- CSR B: Parts are easy to replace, but some knowledge of the product and technical skills may be required. The customer can decide whether to replace the part or to call for an engineer.

The CSR parts are listed below.

Part number	Description	CSR type	In box
CH538-67005	T1200 Left Side Panel SV (see Left side panel (T1200) on page 562)	B	Yes
Q5669-60690	Flex Contacts Cleaning Tool SV	A	No
Q5669-60692	Troja Lubrication Kit SV	A	No
Q6683-60241	Paper Advance Calibration T Se	A	No
Q6687-60093	Paper Advance Calibration T Se	A	No
CN727-67023	Cutter Assy with screw (see Cutter assembly on page 556)	A	Yes
CH538-67050	T1200/T770 Roll Cover Freewheel SV (see Freewheel assembly on page 558)	A	Yes
Q6659-60183	Spindle 44 SV	A	No
Q6675-60093	3" Adaptor kit - Troja Service	A	No
CN727-60084	Serial Label SV	A	No
CH538-67049	T1200 Support & cables for removable HDD	A	No
Q5669-60718	Leg Cover SV	A	No
Q6659-60237	Bin Assembly 44 SV	A	No
Q5669-60730	Hardware Kit SV	A	No
Q5669-67063	Basket Tubes + Adaptors Servic	A	No
Q6675-67004	Ink System Purgers (6 units)	A	Yes
CH538-67037	Pinch Arm Assembly for Roll Cover SV (see Pinch arm assembly on page 564)	A	Yes
CH538-67051	Roll Cover Upper Bumpers (see Roll cover upper bumpers on page 568)	A	Yes
CN727–60064	Latch Handle ID	A	Yes
CN727–60066	Front Deflector Assemble	A	Yes
CN727-60094	Rear Deflector Mylar Assembly	A	Yes
CN727-60093	Stand Foot Extension w/ screw	A	Yes
CN727-60095	Scanner Glass Plate Holders (w/o glass plate)	A	Yes
CN727-69005	Scanner Glass Plate	A	Yes

For further information

- CSR Corporate Standards: http://standards.corp.hp.com/smc/hpstd/AHP0001501.htm
- CSR Web site: http://www.hp.com/go/csrparts/
- CSR Parts Availability (EasiTool): https://easitool.atlanta.hp.com/
- HP Parts Page: http://partpage.corp.hp.com/default.asp

Service Calibration Guide to Removal and Installation

Using the Service Calibration Guide

When you remove most product components, you will need to perform a particular set of Service Calibrations and Diagnostic tests to ensure proper product performance.

The Service Calibration Table explains which service calibrations and diagnostic tests need to be performed whenever you remove and install particular product components.

The calibrations and tests must be performed in the order in which they are listed.

NOTE: Even if you do not replace the removed component with a new component, you still need to perform the calibrations indicated in the table.

Diagnostics and Calibration Table

Component	Diagnostic Tests	Service Utilities & Calibrations
Carriage Assembly	Carriage Assembly, Scan Axis, Cutter.	Line Sensor Calibration. After replacement, Reset Life Counters.
Carriage Cover, Carriage Latch, Carriage PCA	Carriage Assembly	Line Sensor Calibration.
Carriage Rear Bushing	Carriage Assembly, Scan Axis, Cutter.	Line Sensor Calibration.
Cleanout Assembly	Carriage Assembly	
Cutter Assembly	Scan Axis, Cutter.	
Drop Detector	Service Station.	Reset Calibration Flag, Drop Detector Calibration.
Encoder Disk, Encoder Sensor	Paper Drive, Electronics Module	Paper Advance Calibration.
Encoder Strip	Scan Axis	
Formatter, Front Panel, Hard Disk Drive, Engine PCA, Power Supply Unit	Electronics Module	
Ink Supply Station Left	Ink Delivery System.	After replacement, reset Life Counters.
Ink Supply Tubes, Support Rail	Sensors.	After replacement, reset the Life Counters and run the Purge Tubes utility.
Line Sensor		Line Sensor Calibration.
Media Advance Drive	Paper Drive	Paper Advance Calibration.
Media Advance Roller	Paper Drive, Sensors.	Paper Advance Calibration.
Media Lever Position Sensor	Sensors	
Out of Paper Sensor	Sensors, Carriage Assembly.	
Pen to Paper Space (PPS) Solenoid	Scan Axis PRS..	
Pinch Roller,	Paper Drive, Sensors	
Preventative Maintenance #1	Carriage Assembly, Scan Axis, Sensors.	Line Sensor Calibration. After replacement, reset Life Counters.
Preventative Maintenance #2	Service Station.	Drop Detector Calibration. After replacement, reset Life Counters.

Component	Diagnostic Tests	Service Utilities & Calibrations
Primer Assembly	Service Station.	Drop Detector Calibration.
Print Zone Overdrive	Starwheel Lifter..	
Glass Plate, CIS Element, Scanner Exit Media Sensor, Scanner Entry Media Sensor, Scanner Controller PCA, Scanner Motor Assembly	Sensors.	Calibrate the Scanner, Scanner Validation.
Single Sheet Sensor	Sensors.	Calibrate Sheet Sensor

Performing the Service Calibrations and Diagnostic Tests

When you are ready to perform the service calibrations and diagnostic tests that correspond to the component you have installed or replaced, consult the following sections for procedures:

- Paper Drive Test on page 137.
- Electronics Module Test on page 139.
- Carriage Assembly Test on page 141.
- Sensors Test on page 144.
- Rewinder Test on page 147.
- Ink Delivery System (IDS) Test on page 149.
- Service Station Test on page 156.
- Paper Advance Calibration on page 208.
- Drop Detector Calibration on page 215.
- Line Sensor Calibration on page 218.

Belt Assembly

Removal

1. Switch off the product and remove the power cable.
2. Remove the Carriage Assembly. See Carriage Assembly on page 242.
3. Slide the Belt Assembly out of the attachment on the Carriage Assembly.

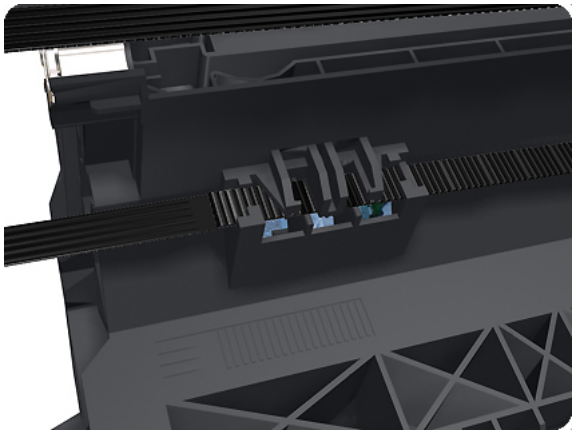

4. Remove the Belt Tensioner Assembly.

NOTE: When reinstalling the belt, make sure it is correctly routed.

NOTE: When you finish installing or replacing this component, you must perform the necessary Service Calibrations. To find which calibrations you must perform, see Service Calibration Guide to Removal and Installation on page 267.

Bin Assembly

Removal

1. Switch off the product and remove the power cable.
2. Lay out the components of the basket.

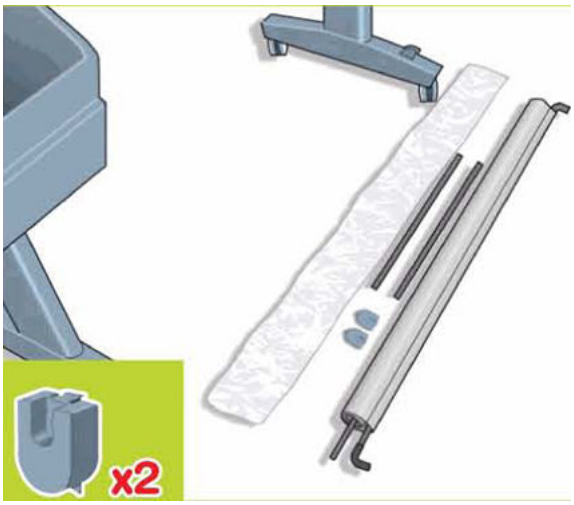

3. Fit the basket supports to the stand legs, one to each leg.

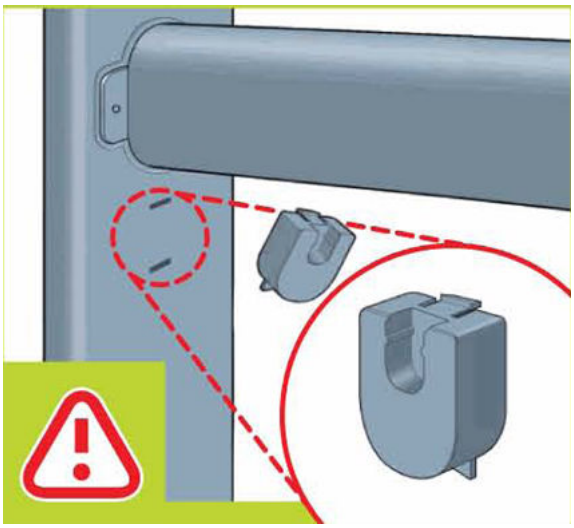

4. Fit the two short tubes to the product's feet, one on the front of each foot. Each tube should click into place.

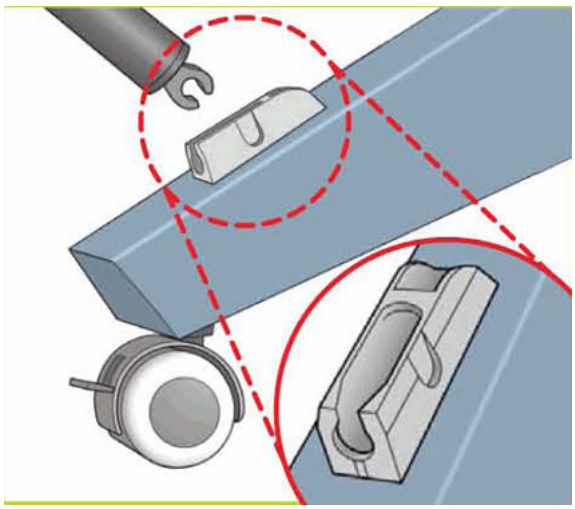

5. Attach the basket's front tubes to the two short tubes on each foot.

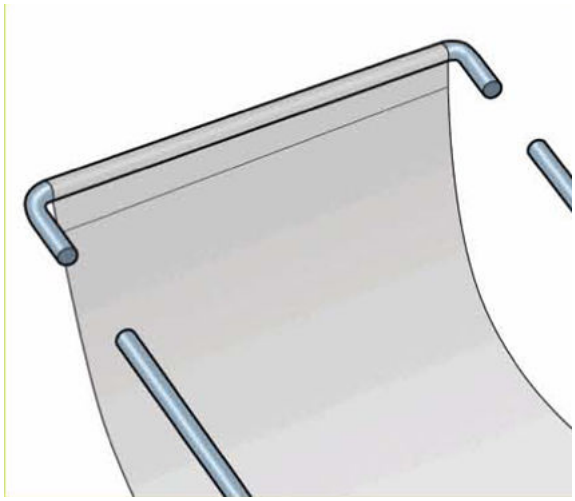

6. Rest the basket's rear tubes on the supports that you have just fitted to each leg of the stand.

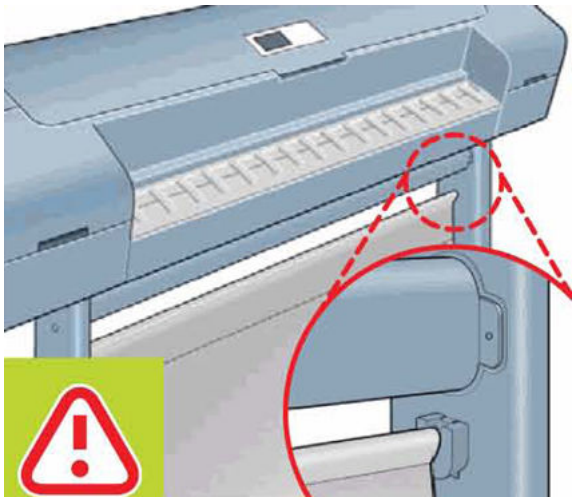

7. The basket is now complete.

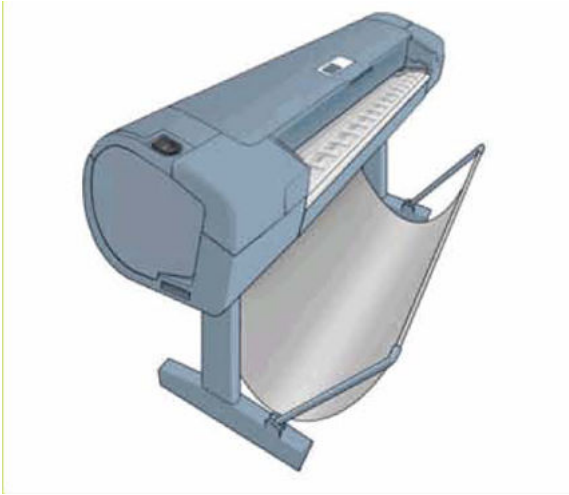

Bi-stable Springs

These parts should not be replaced by customers.

Removal

1. Remove the Roll Cover, Lower on page 473.
2. Unscrew the Left Bi-stable Spring from the Lower Roll Cover.

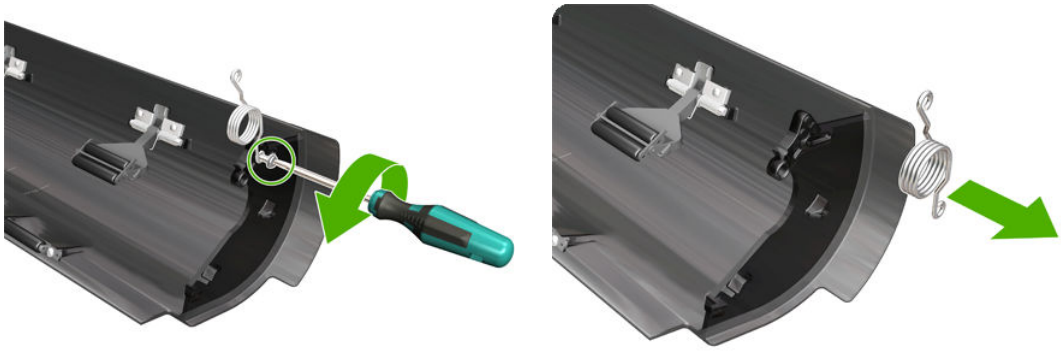

3. Unscrew the Right Bi-stable Spring from the Lower Roll Cover.

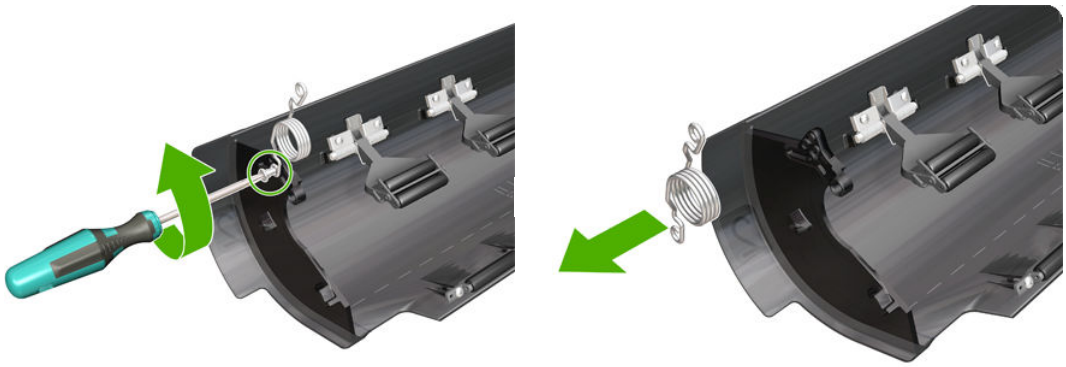

Installation

1. There are two pre-loaded Bi-stable Springs, one for the left side (gold link) and one for the right side (black link). There are two screws for each Bi-stable Spring (total four screws).

2. Screw the right Bi-stable Spring (black link) onto the right side of the Lower Roll Cover.

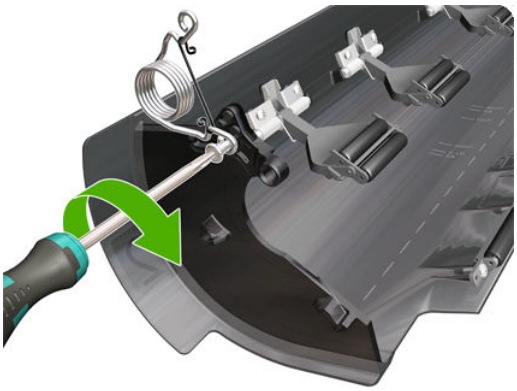

3. Screw the left Bi-stable Spring (gold link) onto the left side of the Lower Roll Cover.

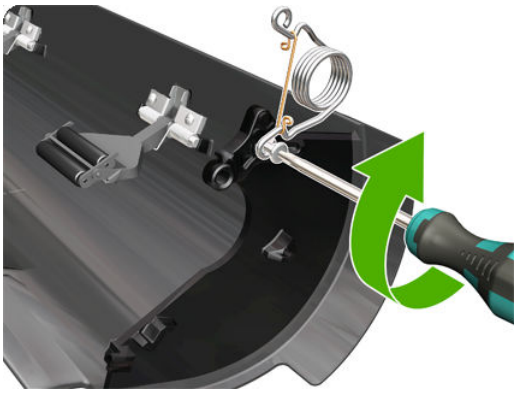

4. Hold the Roll Cover with two hands while mounting it in the Roll Support.
5. Insert the Lower Roll Cover right-side hinge into the Lower Right Roll Support pin.

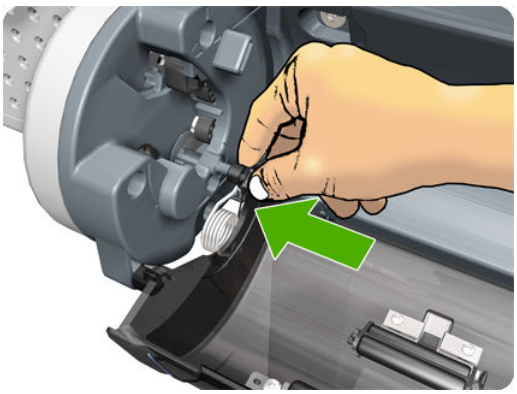

6. Insert the Lower Roll Cover left-side hinge into the Lower Left Roll Support pin.

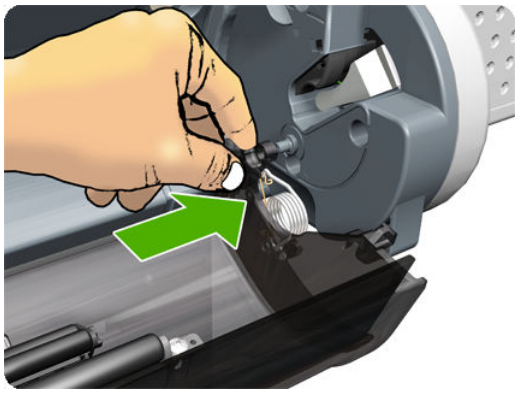

7. Screw the Lower Roll Cover to the Lower Right Roll Support.

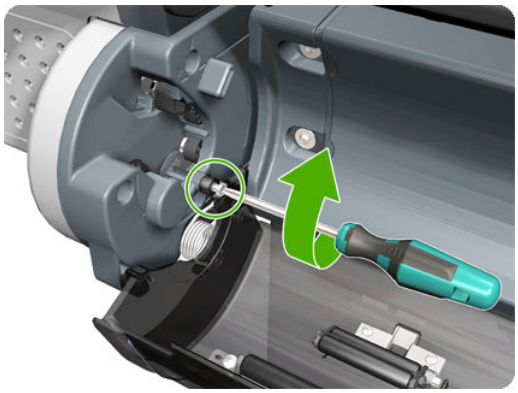

8. Screw the Lower Roll Cover to the Lower Left Roll Support.

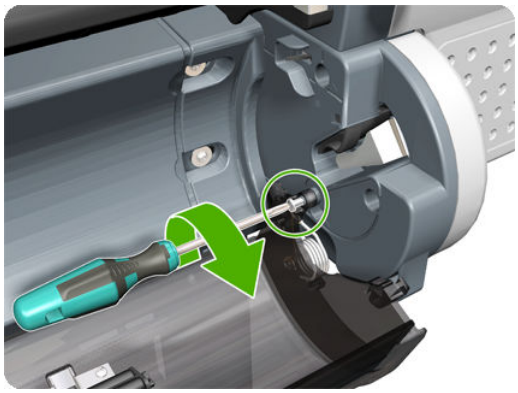

9. Close the Lower Roll Cover until the other end of the Bi-stable Screw is in front of the hole on the Lower Left Roll Support (if necessary, hold the Roll Cover for a moment with your head).

10. Screw the left pre-loaded Bi-stable Spring to the Lower Left Roll Support. Do not let the cover close completely.

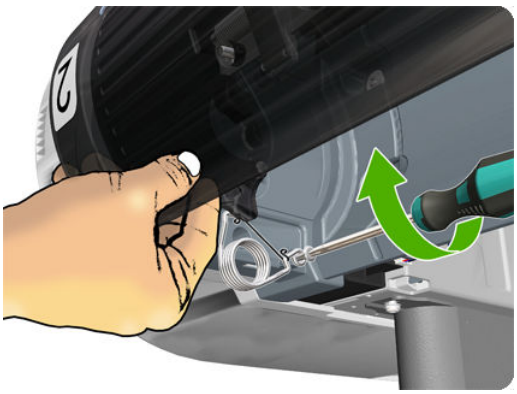

11. Screw the right pre-loaded Bi-stable Spring to the Lower Right Roll Support.

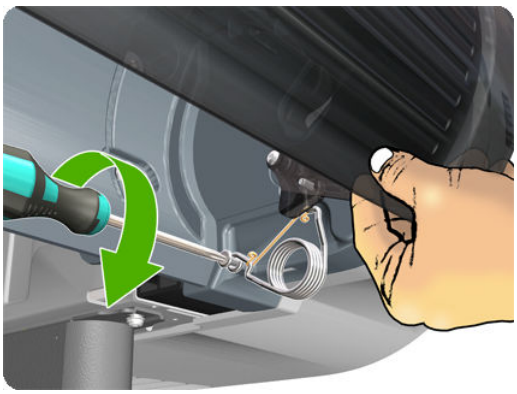

12. Close the Lower Roll Cover completely.

13. Free one end of the right metal link of the right Bi-stable Spring.

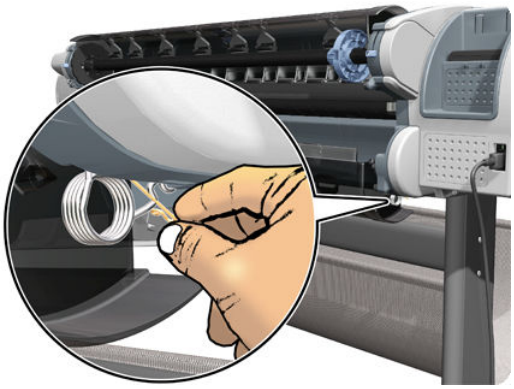

14. Free the other end of the right metal link of the right Bi-stable Spring (if necessary, play slightly with the Lower Roll Cover).

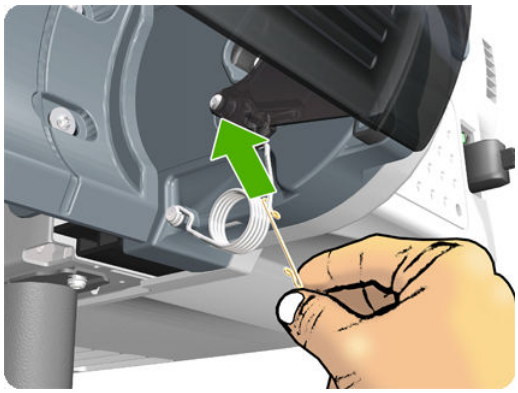

15. Free one end of the left metal link of the left Bi-stable Spring (if necessary, play slightly with the Lower Roll Cover).

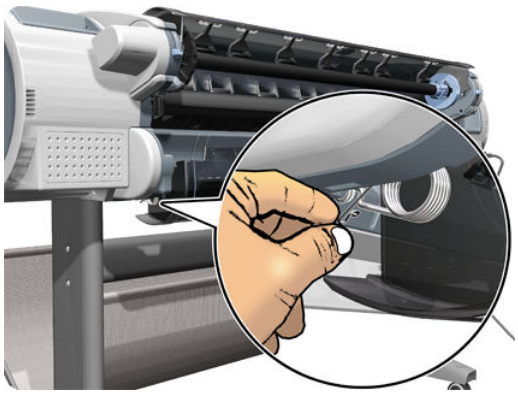

16. Free the other end of the metal link of the left Bi-stable Spring.

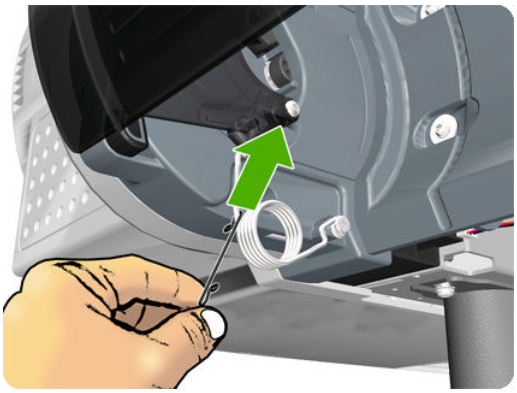

17. Store the metal links that you have removed.

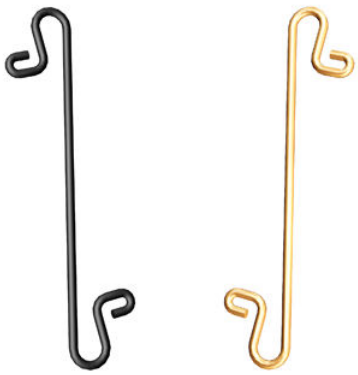

Bumpers, Left and Right

Removal

1. Switch off the product and remove the power cable.
2. Remove the Right Cover on page 463.
3. Remove the Left Cover on page 403.
4. Remove the T-15 screw that secures the right bumper.

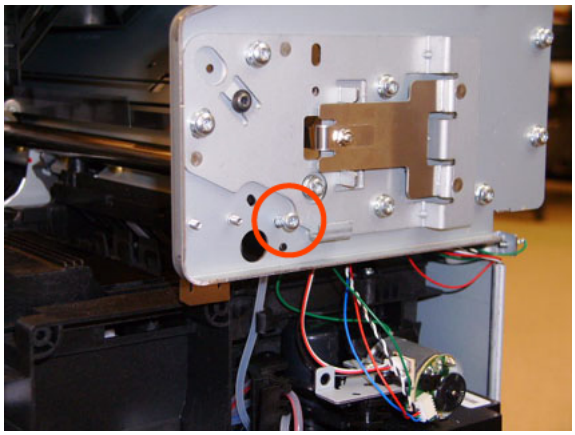

5. Remove the right bumper.

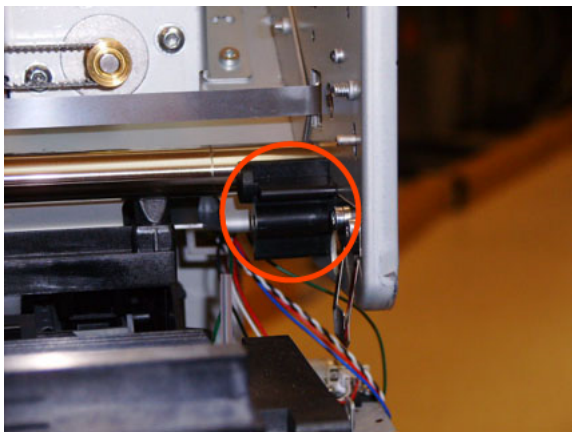

6. Remove the T-15 screw that secures the left bumper.

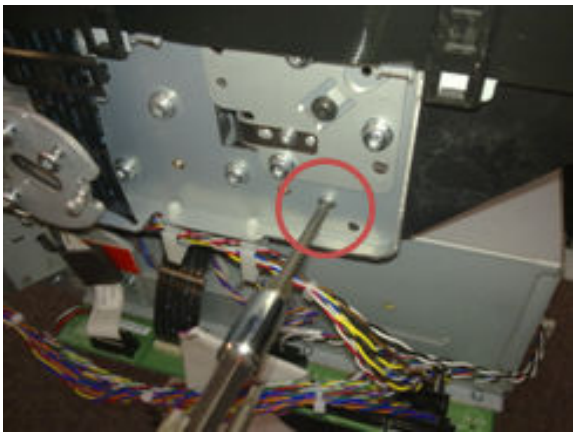

7. Remove the left bumper.

Installation

1. Switch off the product and remove the power cable.
2. Remove the Right Cover on page 463.
3. Remove the Left Cover on page 403.

4. Attach the left bumper. Make sure to snap the bumper on to both parts shown.

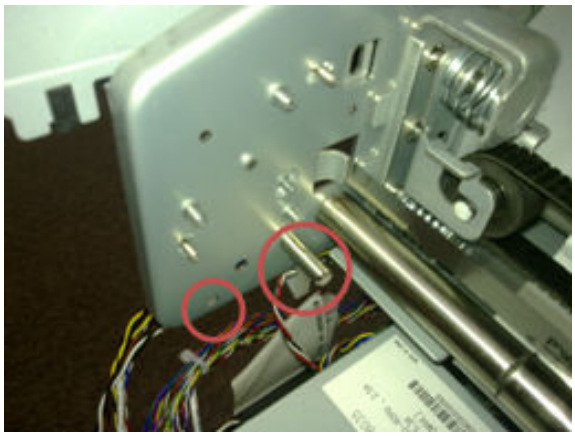

5. Secure the left bumper to the product with a T-15 screw.

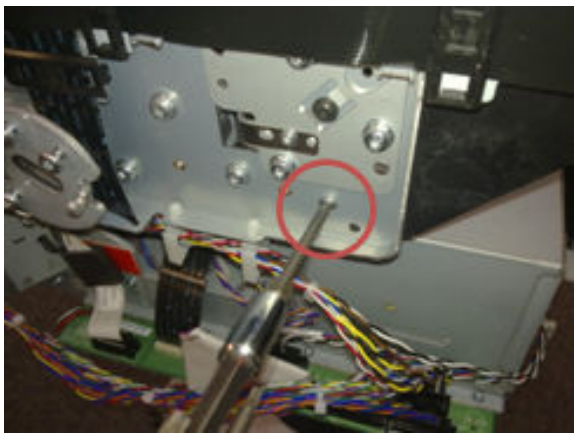

6. Attach the right bumper.

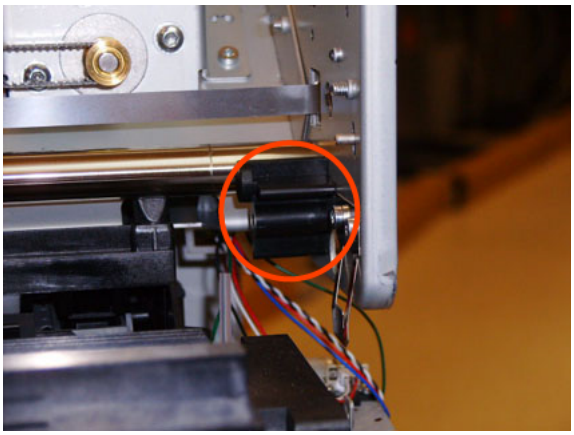

7. Secure the right bumper to the product with a T-15 screw.

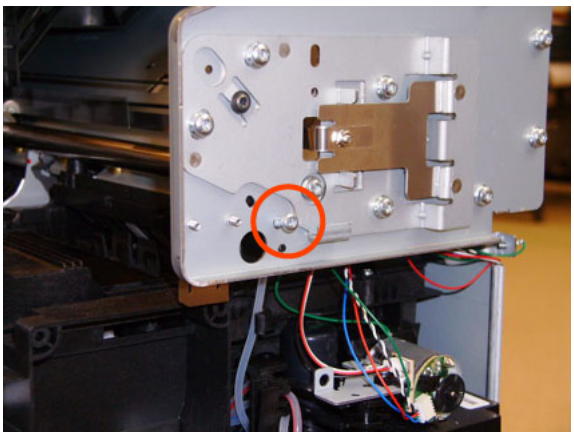

Engine Cables Kit

1. Remove the Converger on page 334.
2. Remove the Rear Cover on page 460.
3. Remove the Rear Cover (MFP only) on page 457
4. Remove the Left Cover on page 403.
5. Remove the Right Cover on page 463.
6. Remove the Right Scanner Cover (MFP only) on page 467.
7. Open the Scanner (MFP only) or Window.

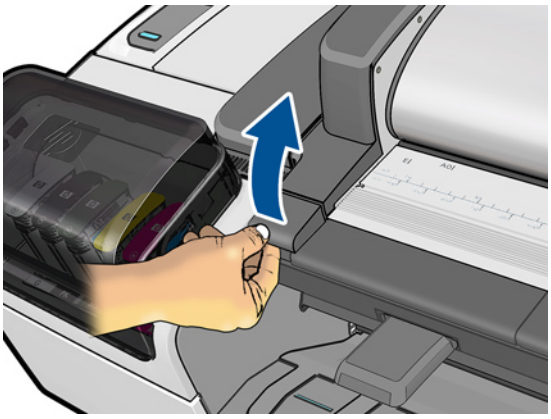

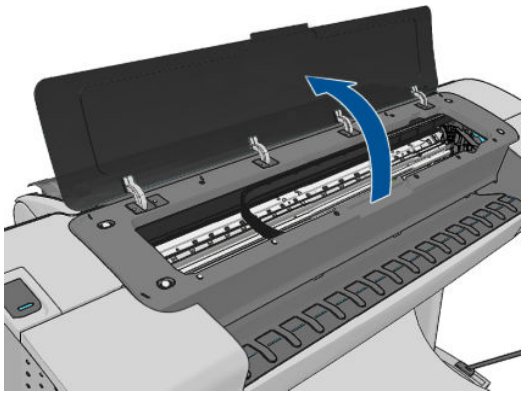

8. Unplug both connectors.

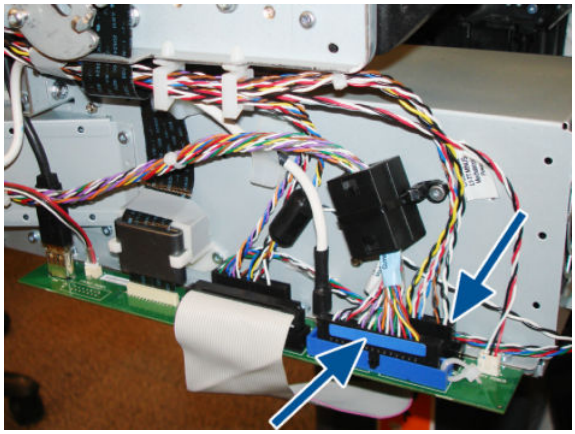

9. Cut the cable tie that fixes the ferrite on to the Data Harness. Open the ferrite and remove from the cable (this action is required to be able to pass the harness under the arc).

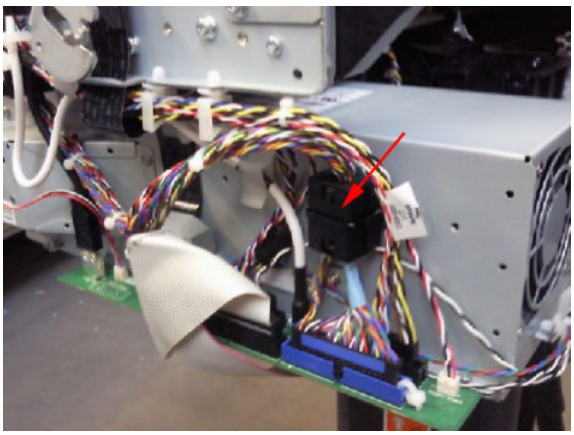

10. Make sure all the ferrites are removed.

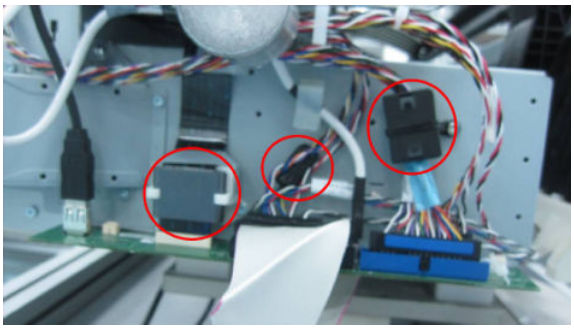

11. Detach both cable branches from their holders.

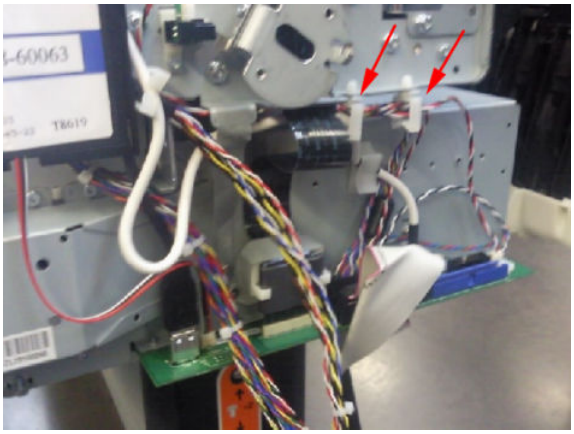

12. Remove the tape from the cable branch.

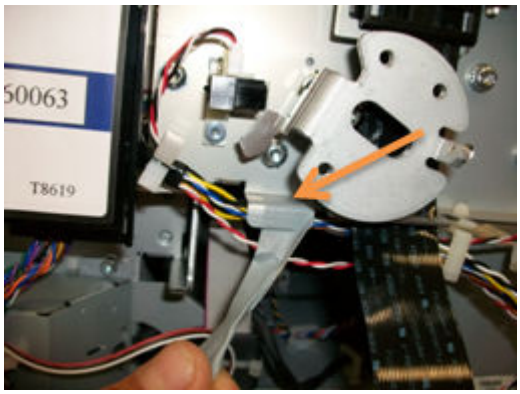

13. Remove the RFID tag support.

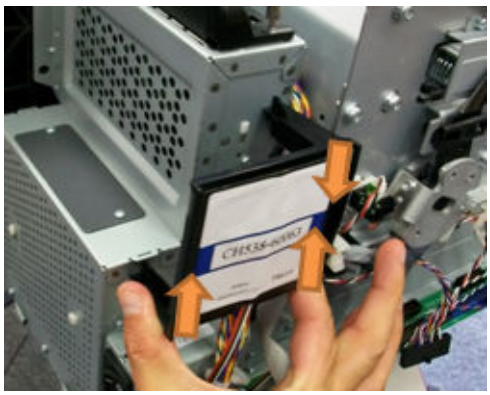

14. Detach both cable branches.

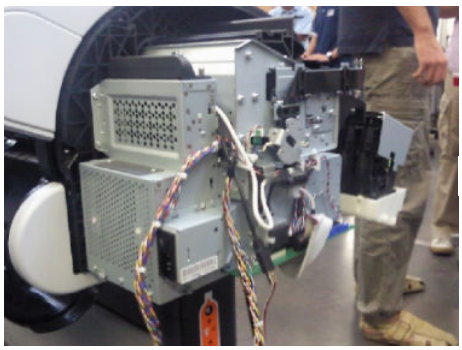

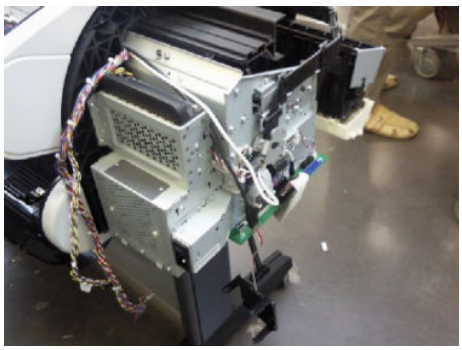

15. Unscrew all nine cable ties from the upper cable branch.

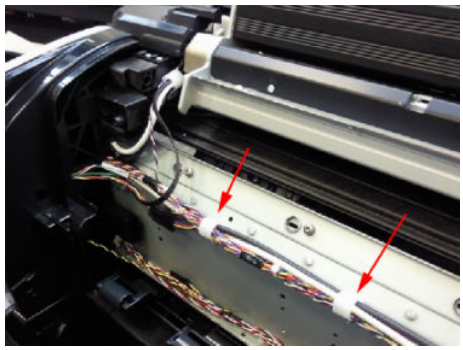

16. Keep the cable ties and screws to for reuse after replacing the cable.

17. Locate the Scanner Position Sensor connections.

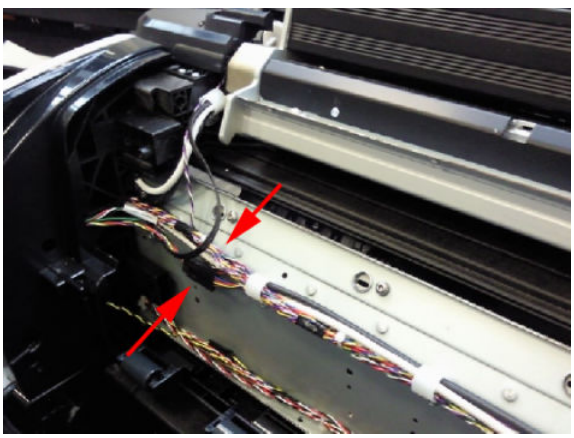

18. Unplug both connectors shown in the picture.

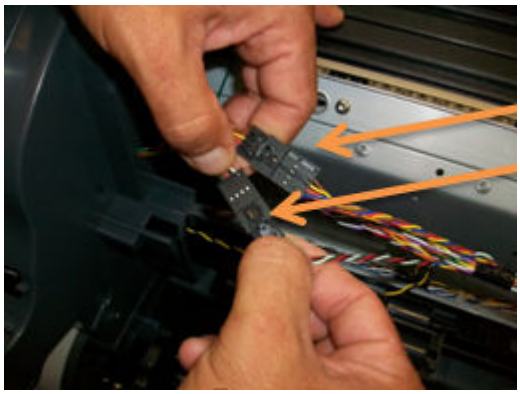

19. Disconnect the cable from the Scanner Position Sensor, and remove the cable from the hook.

NOTE: Steps 17 and 18 are not required for the HP Designjet T790, T795 & T1300 Printers.

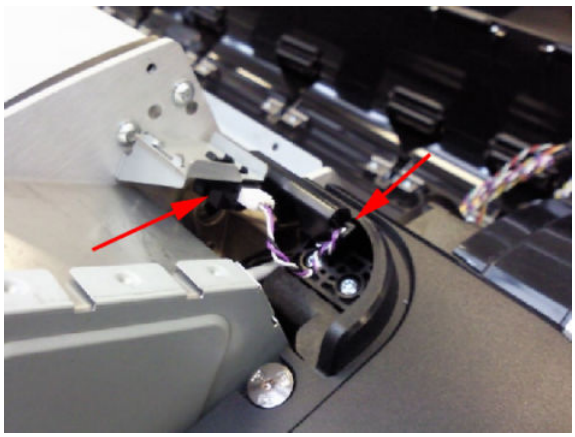

20. Pull the cable under the cover.

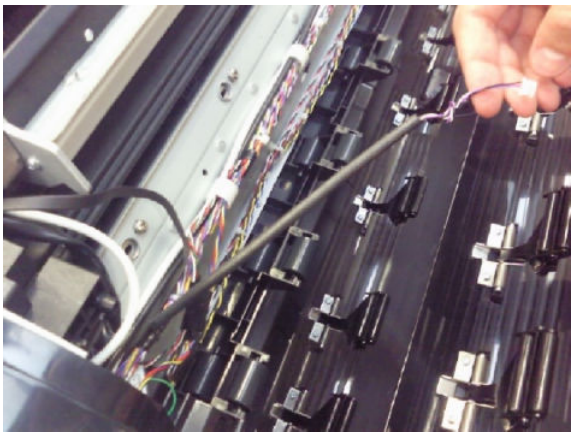

NOTE: In order to avoid accidentally disconnecting the sensor while opening the scanner, because the cable is incorrectly adjusted, follow the installation steps carefully on Scanner Position Sensor (MFP only) on page 516.

NOTE: When replacing the Data Harness, make sure you reuse the spiral binding tube that protects the sensor cables onto the new Data Harness. This protection is needed in order to prevent damage to the cables during transportation. In order to put the spiral binding tube on the cable, hold the sensor cable and insert binding from beginning of the sensor branch and rotate the binding.

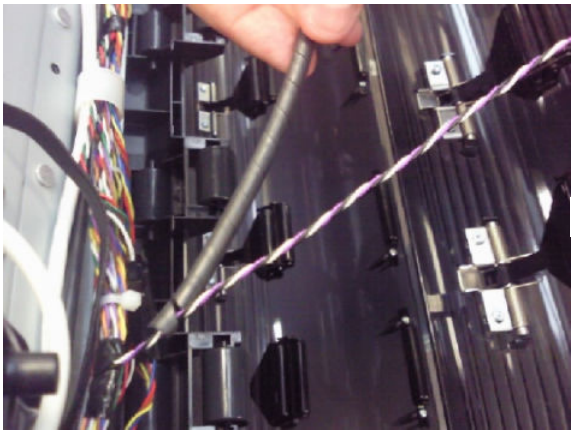

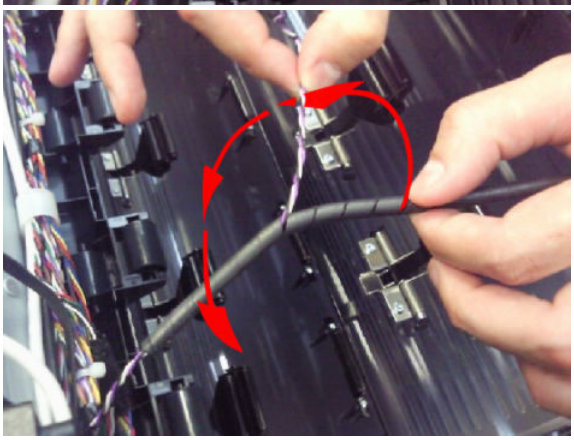

21. Remove the screw that holds the grounding cables.

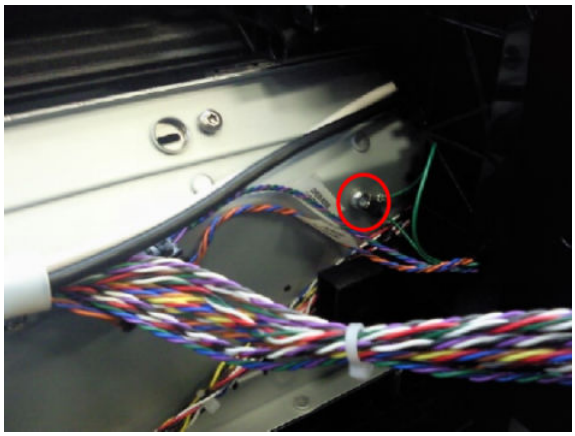

22. Pull both Data and Power Harness under the left arc

23. On the other side of the unit, detach Power and Data cables from cable ties.

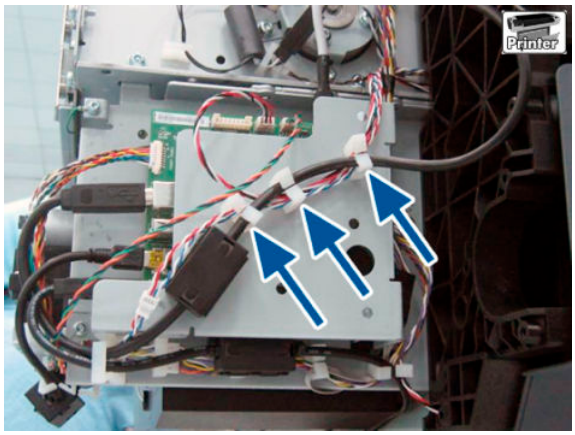

24. Remove the ferrites.

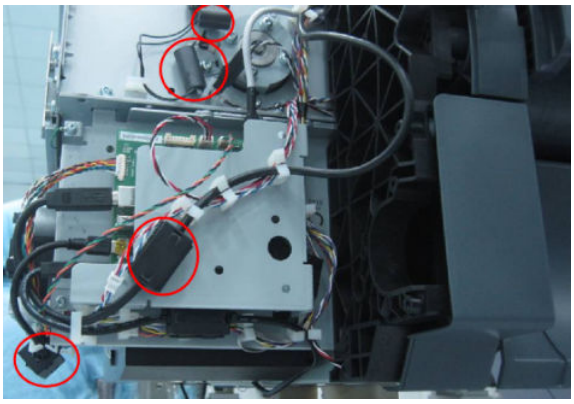

25. Remove Power and Data cables from more cable ties.

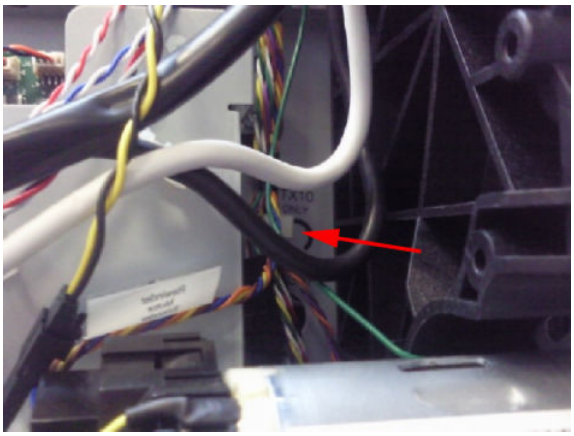

26. Remove Power and Data cables from more cable ties.

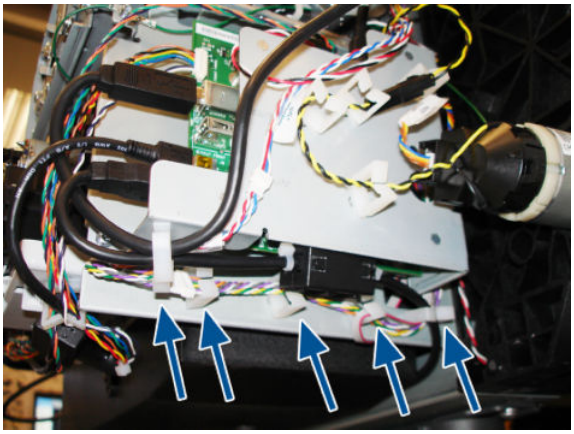

27. Disconnect the 6 Power and Data connectors around the Interconnect Board.

- 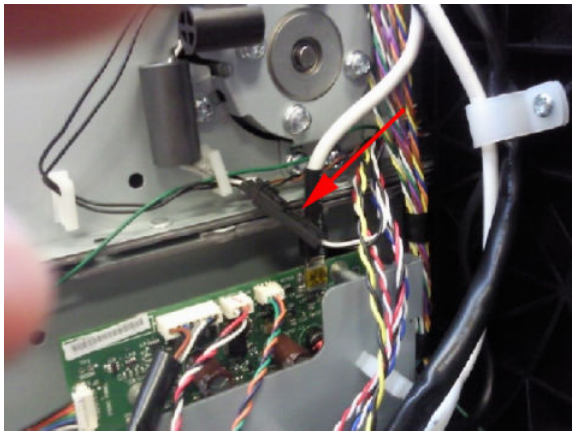
- 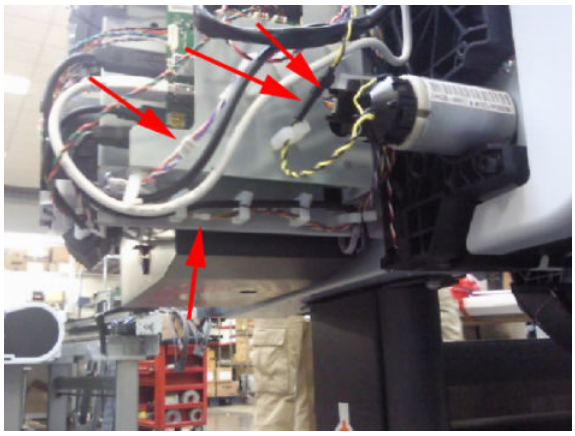
- 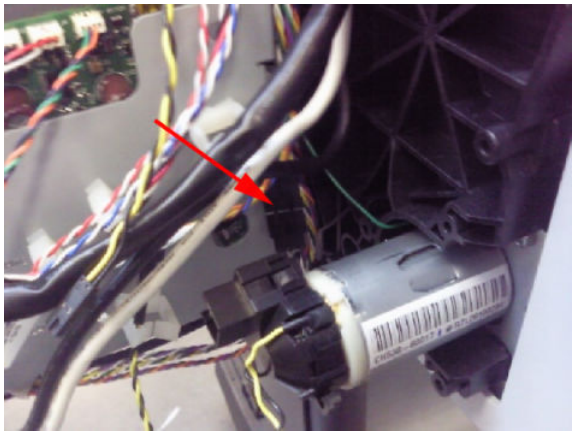

28. Disconnect the Media Sensor from below the unit and pull the cable through the arc.

29. Pull the Power and Data Harness under the arc right.

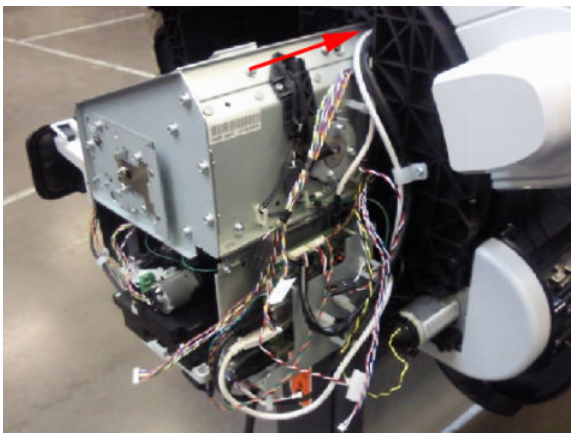

Connecting the Data Harness and ISS Harness Cable

Wether you are reconnecting or replacing the cables it is important that the ISS Harness and Data Harness are connected correctly to their corresponding connectors on the Engine PCA, it is possible to swap them over in error and connect them into each others connectors, and cause a 22.1:10 system error. Perform the following procedure to correctly identify the Data Harness and ISS Harness and connect them correclty

1. The Data Harness can be identified with a label on the cable.

2. The corresponding connector on the Engine PCA is also marked 'Data Harness'.

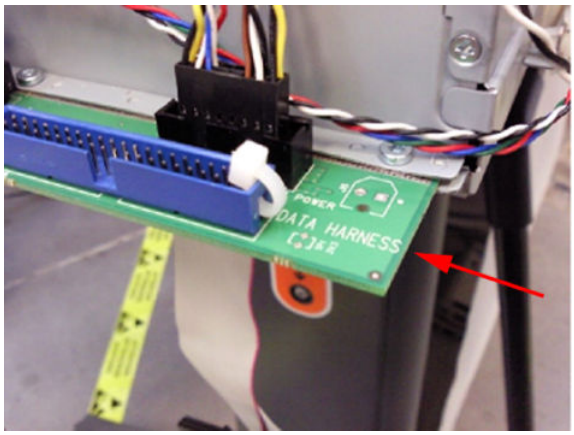

3. The connector of the Data Harness has a blue label, and the corresponding connector on the Engine PCA is also blue.

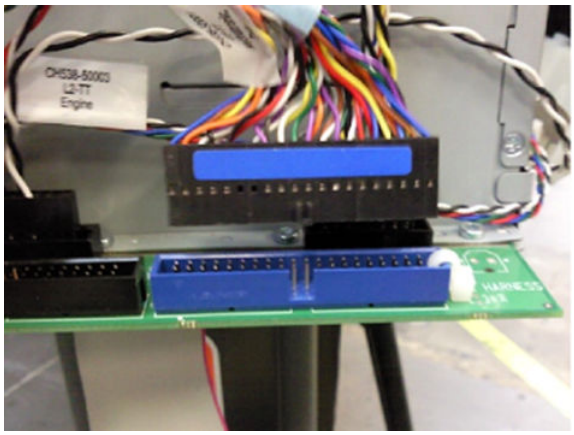

4. The Connector on ISS Harness cable is black and the corresponding connector on the Engine PCA is also black.

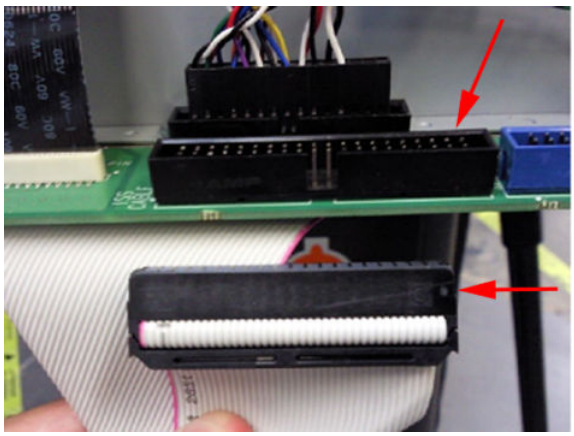

5. The corresponding connector on the Engine PCA is also marked 'ISS Cable'.

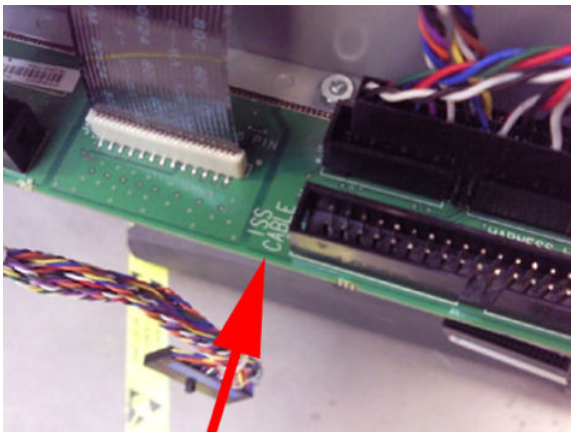

6. The connector for the Data Harness on the Engine PCA includes a cable tie that prevents an incorrect connection of the ISS Harness Cable.

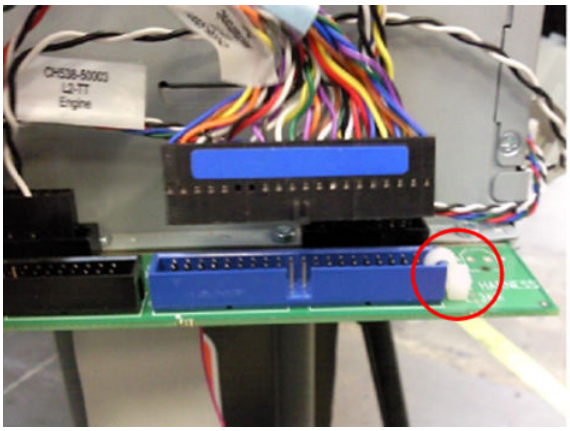

7. The connector of the ISS Harness Cable cannot be inserted because of the cable tie.

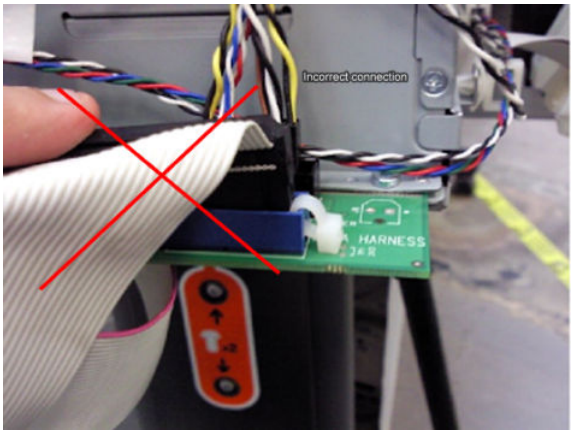

Interconnect Cables Kit

Remove Touch Panel Cables

1. Switch off the product and remove the power cable.
2. Remove the Converger on page 334
3. Remove the Rear Cover on page 460
4. Remove the Rear Cover (MFP only) on page 457
5. Remove the Right Cover on page 463.
6. Remove the Left Cover on page 403.
7. If necessary, manually move the Carriage Assembly fully right into the docking station.
8. Remove the Touch Control Panel from the holder and disconnect the Touch Control Panel USB and Data-Power cables

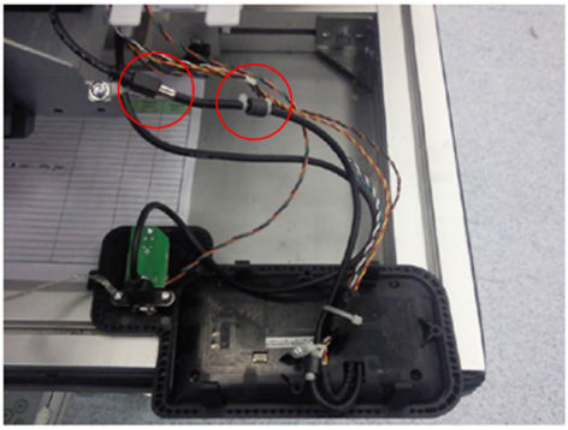

9. Disconnect the Power Button Cable .

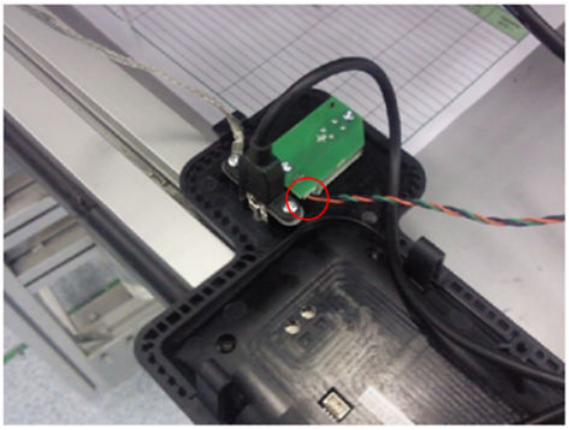

10. Remove the two screws and remove the USB Host connector leaving the metal grounding gasket.

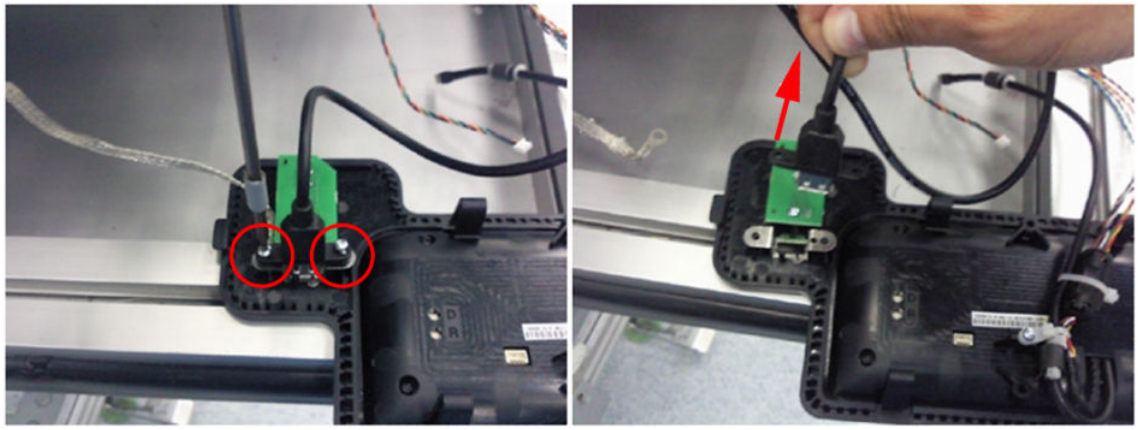

11. Remove the screw that fastens the USB Host cable.

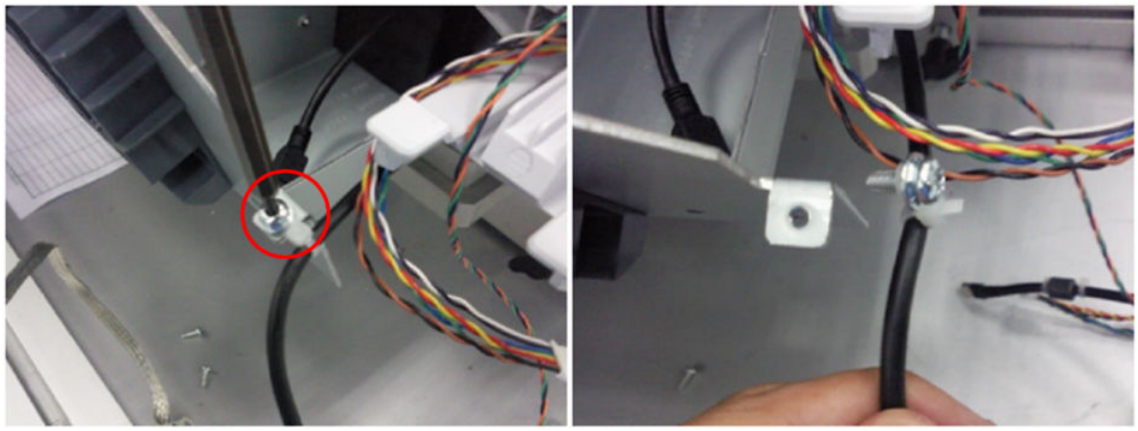

12. Remove the screw that holds the grounding cable.

13. Remove the screw from the clamp that secures the Touch Control Panel Power-Data cable.

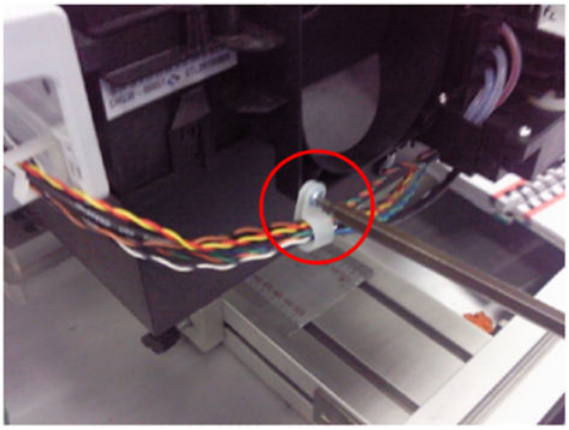

14. Remove the USB, Power-Data and Power Button cables from the cable clamps

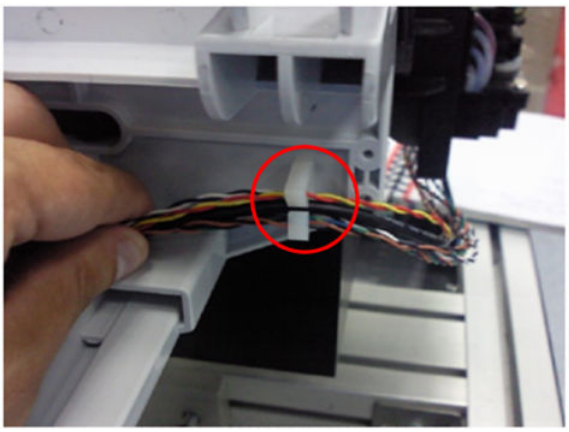

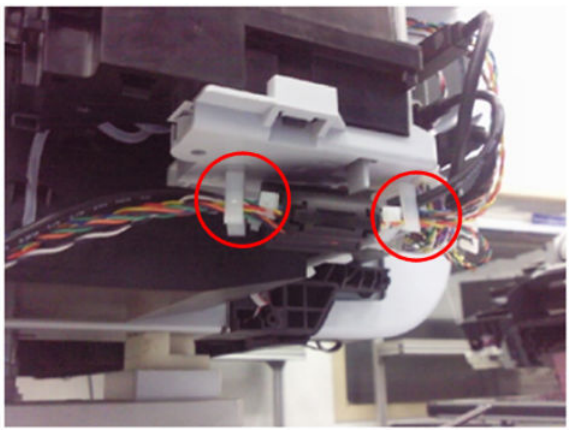

15. Remove the Service Station on page 495

16. Remove the USB Host cable from the back of the Service Station.

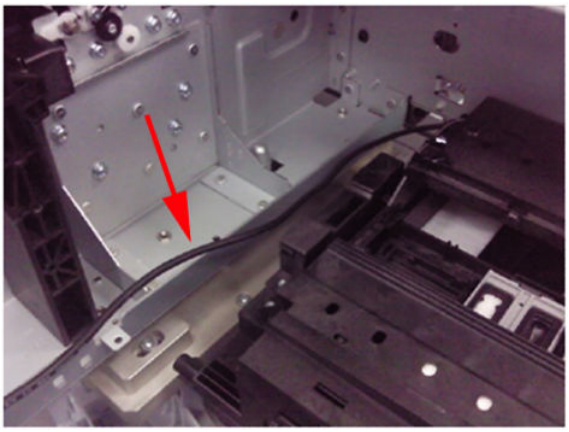

17. Remove the USB Host cable from the clamps.

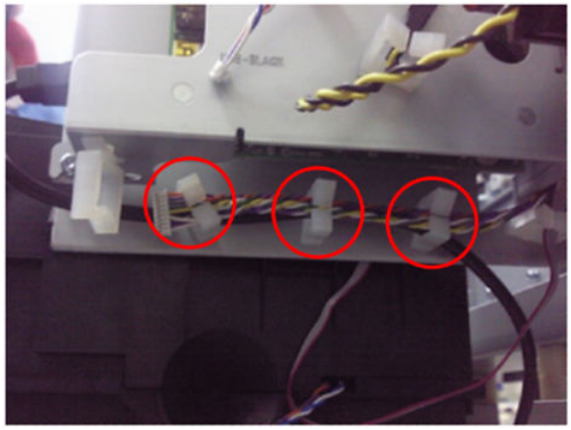

18. Disconnect from Interconnect Board the cables: Cable USB Interconnect to Ext Host, Cable USB Interconnect to Touch Panel, Cable Power-Data Interconnect to Touch Panel, Cable Interconnect to Power Switch.

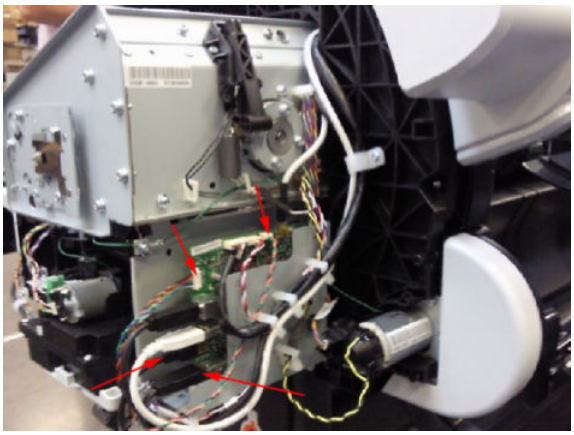

Remove Engine to Interconnect Cables

1. Disconnect from the Interconnect Board the cables: Cable USB Engine to Interconnect, Cable Micci2 Engine to Interconnect, and Cable Power Engine to Interconnect.

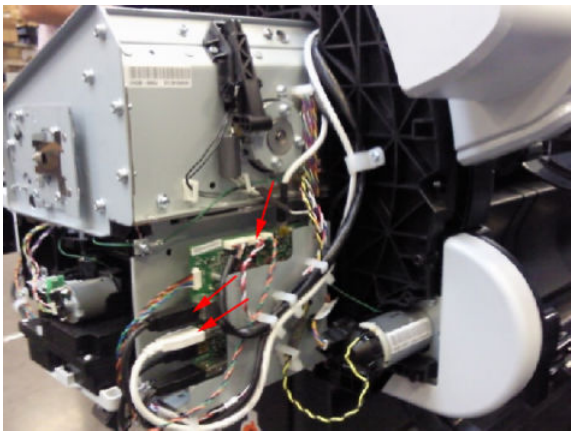

2. Remove the USB, Micci2 and Power cables from the clamps.

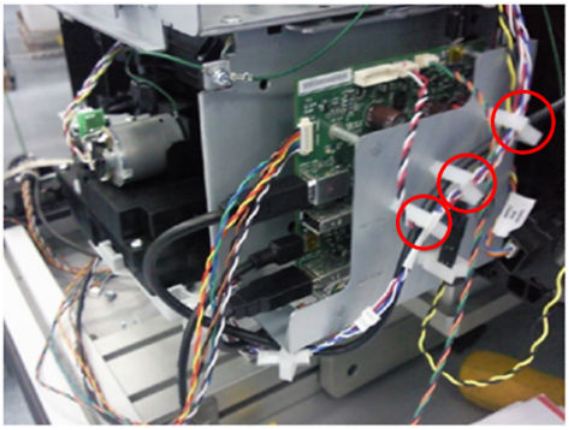

3. Pass the right side of USB, Micci2 and Power cables under the arcs.

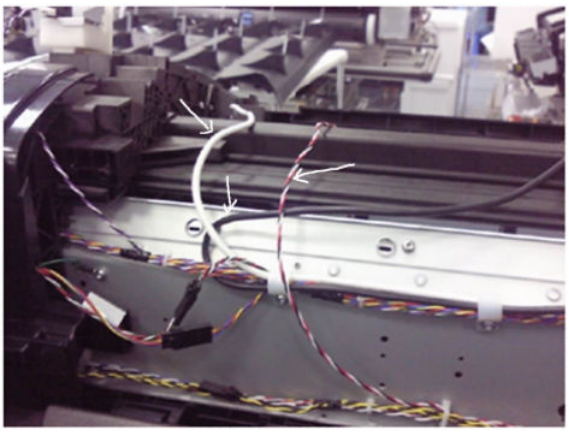

4. Remove the 5 Power cable from the clamps all along the back of the chassis.

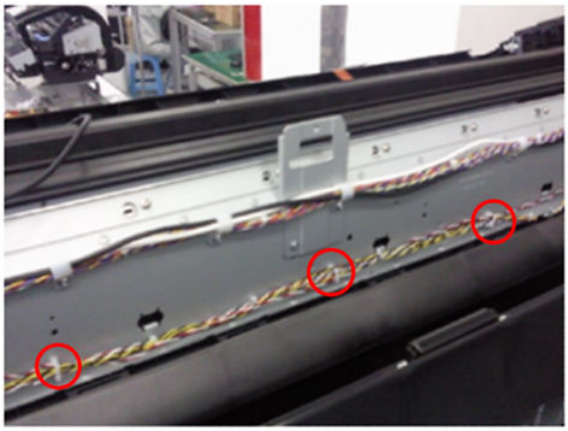

5. Remove the 5 screws that hold the clamps and remove the USB and Micci2 cables.

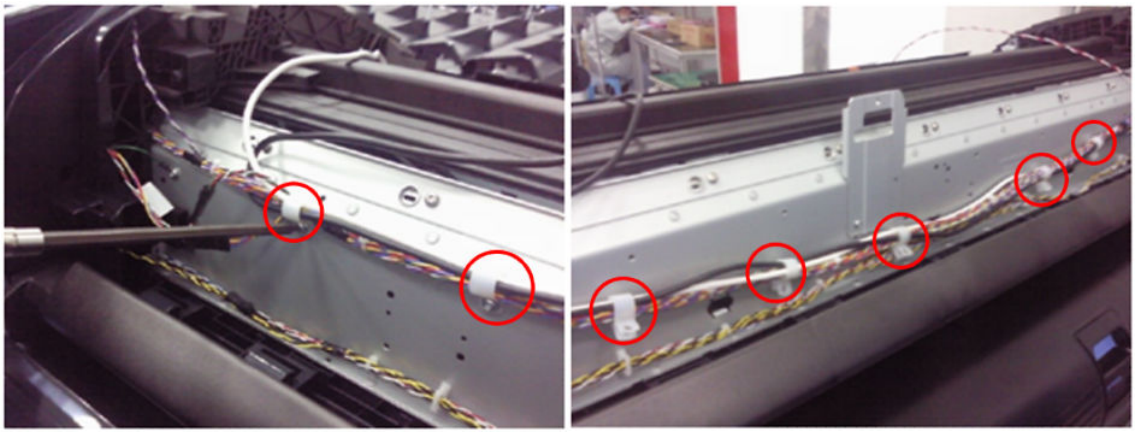

6. Pass the right side of the USB, Micci2 and Power Cables under the left arc.

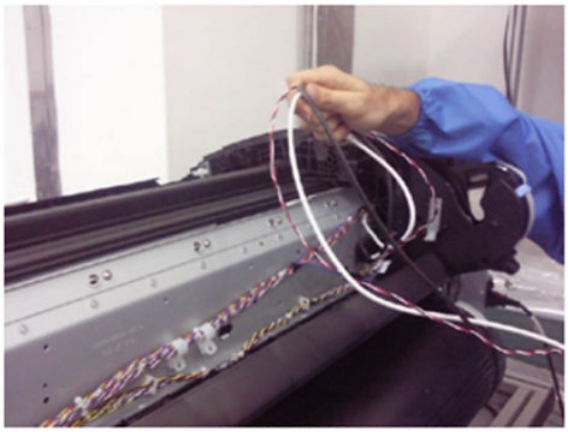

7. Disconnect the USB, Micci2 and Power cables from the Engine PCA.

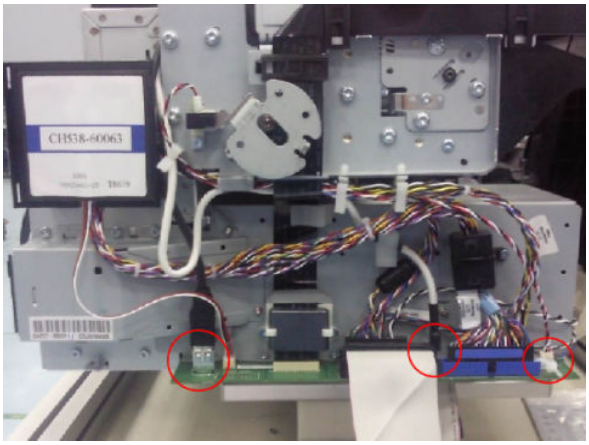

8. Remove the Micci2 and Power cables from the clamps; remove the taping that hold the cables.

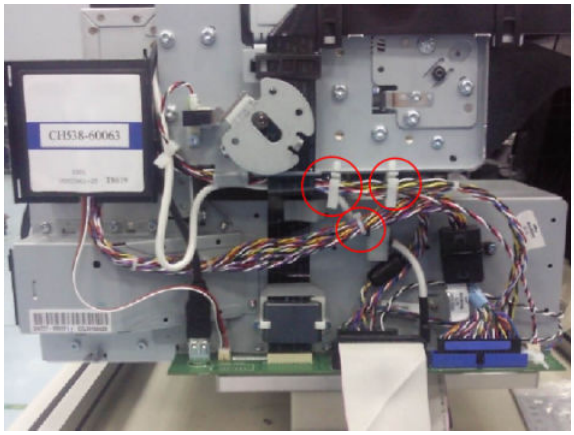

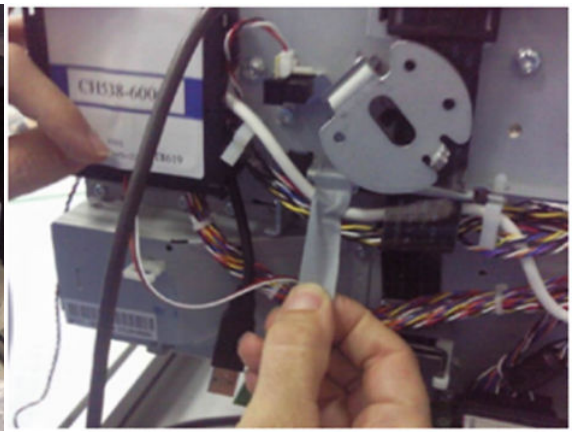

9. Remove the screw that fastens the ferrite on the Data Harness to the EE Box. (This ferrite is included in the new Cables and Ferrites Kit; make sure to assemble and fasten the new ferrite it in the same position.).

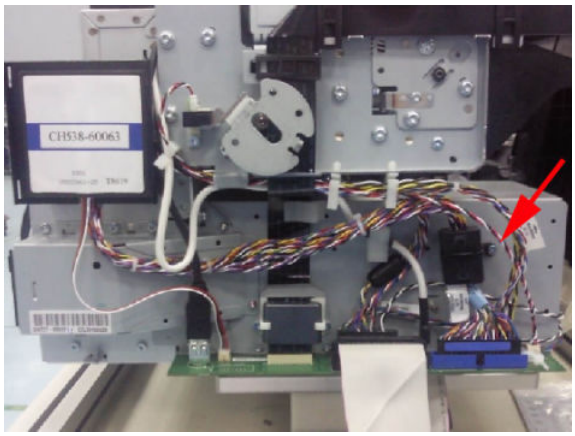

10. Unclip to open and remove the ferrite on the Engine Harness. Ensure to assemble back the Ferrite on the Engine Harness holding the same group of cables and in the same position; this ferrite is included in the new Cables and Ferrites Kit.

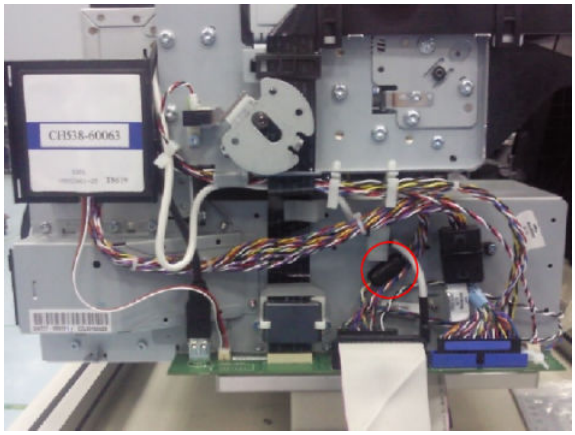

11. Remove the 2 screws, disconnect the Trailing Cable and remove the ferrite.

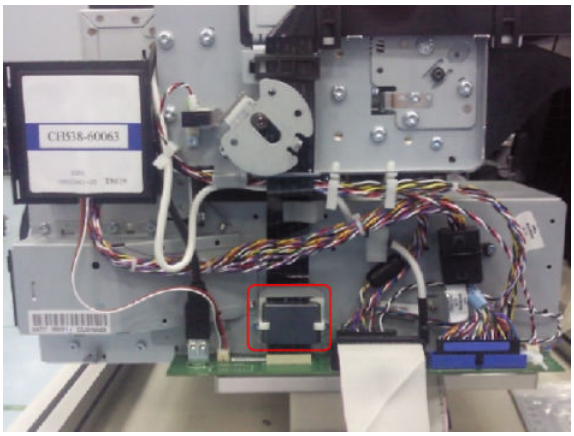

Carriage and Cutter Assembly

Removal

1. Switch off the product and remove the power cable.
2. Remove the Front Cover on page 349.
3. Remove the Right Cover on page 463.
4. Remove the Left Cover on page 403.
5. Remove the Touch Control Panel on page 533.
6. Remove the Front Cover on page 349.
7. Remove the Front Top Cover Assembly (MFP only) on page 350.
8. Remove the Encoder Strip, spring and attachment nut on page 367.
9. If necessary, manually move the Carriage Assembly fully right into the docking station.
10. Disconnect the ribbon cable of the Trailing Cables from the Electronics Module.

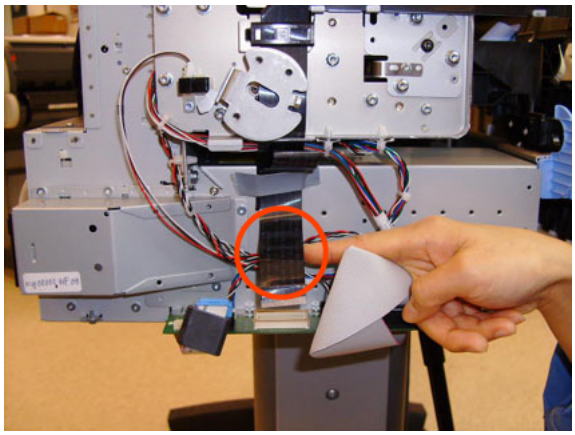

11. Unroute the Trailing Cables.

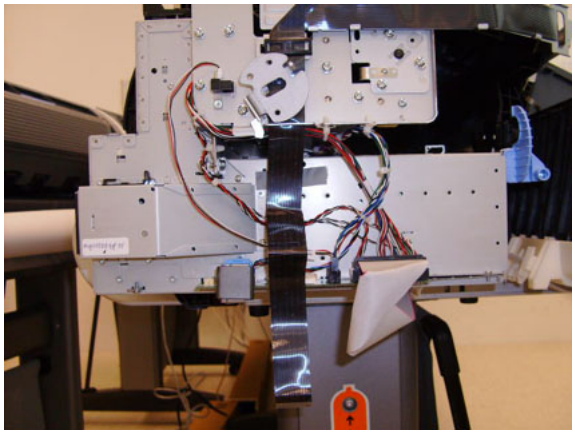

12. Unclip and remove the cable clamp of the Trailing Cables.

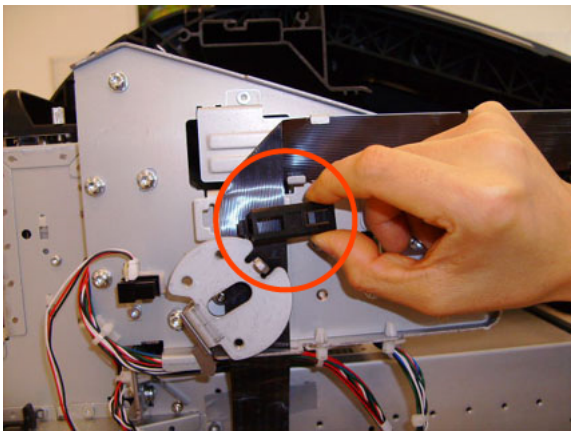

13. Remove 3 Cable Clamps, then unroute the Trailing Cables.

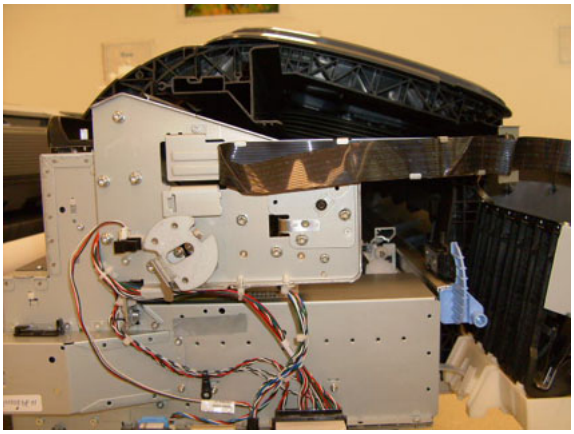

14. Open the Carriage Cover.

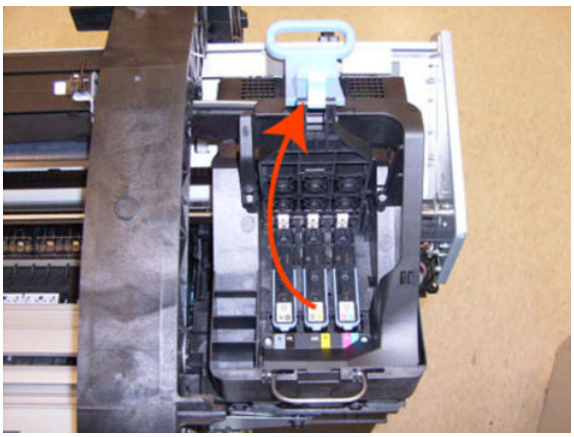

15. Remove all the Printheads.

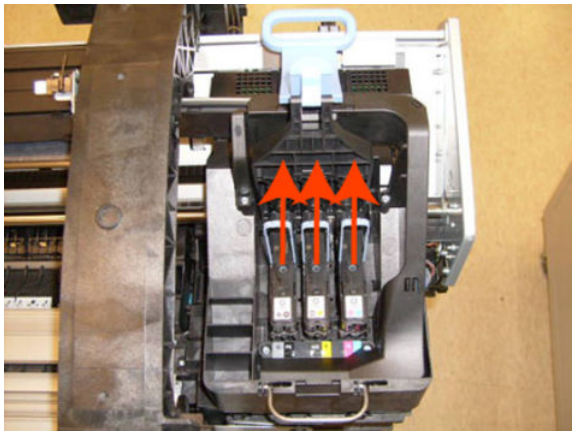

16. Unscrew the small cover of the Carriage PCA.

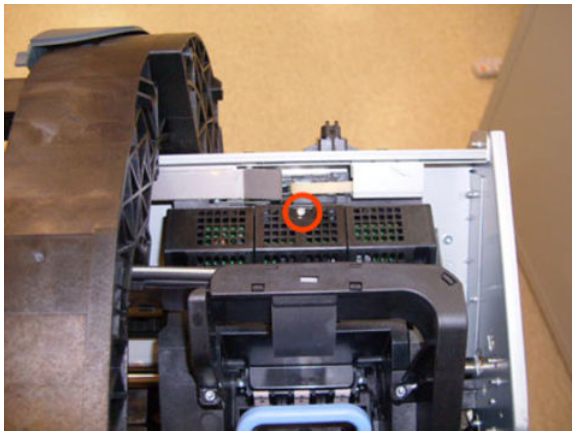

17. Remove the small cover of the Carriage PCA.

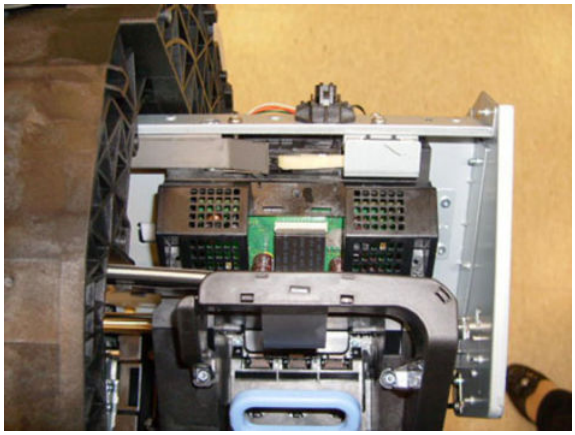

18. Disconnect the ribbon cable of the Trailing Cable from the Carriage PCA.

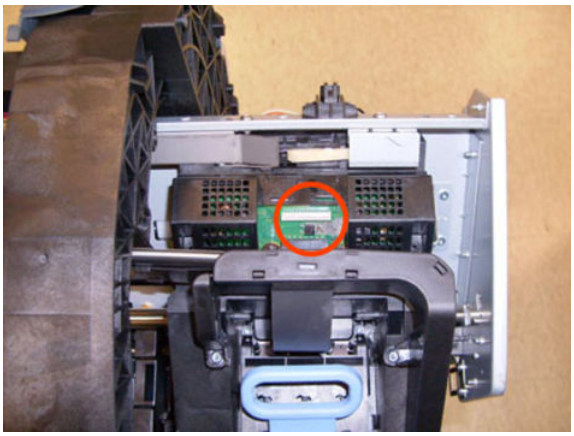

19. Open the latch, and remove the four T-15 screws that secure the Ink Supply Tubes to the Carriage Assembly.

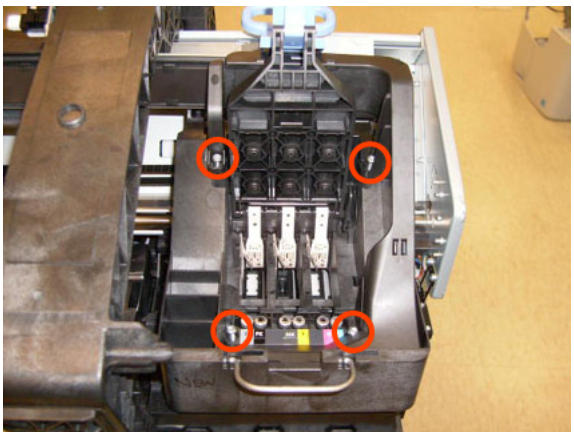

20. Carefully lift out the Ink Supply Tubes and close the carriage cover at the same time.

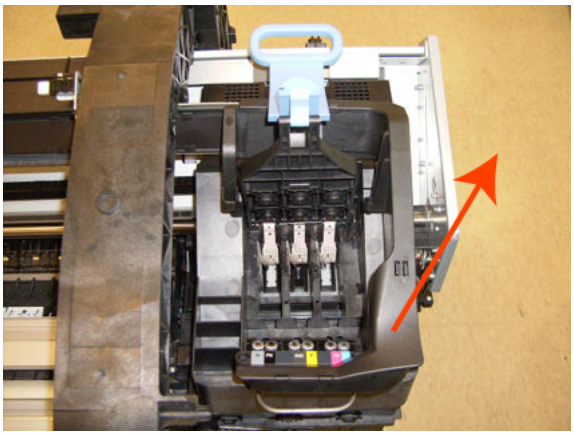

21. Close and lock the Carriage Cover.

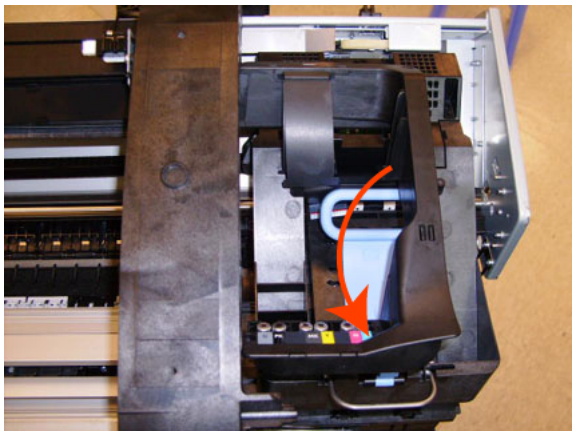

22. Loosen the T-10 uncapping screw sufficiently so you can manually move the Carriage Assembly in step 26.

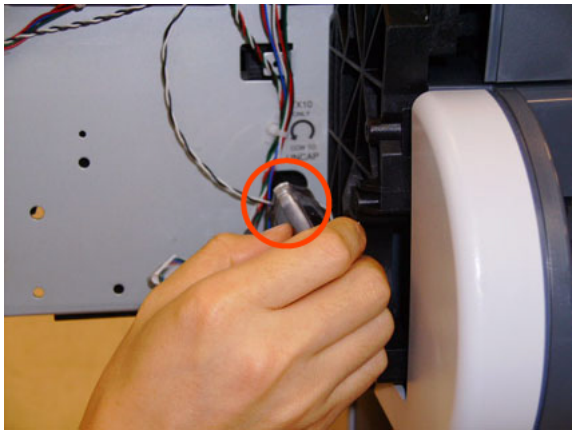

23. Push the Carriage Assembly into the print path.

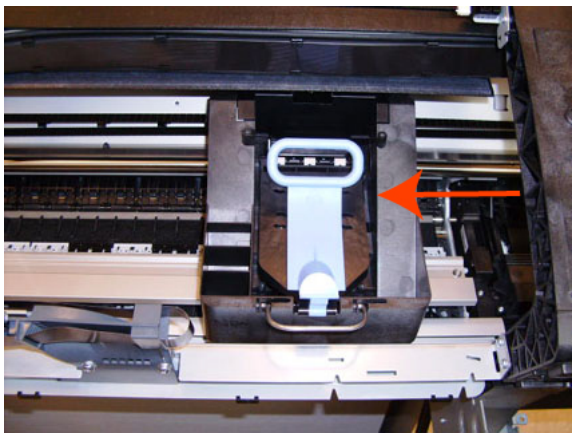

24. Loosen the T-15 screw Belt Tensioner to the product to remove the tension from the belt.

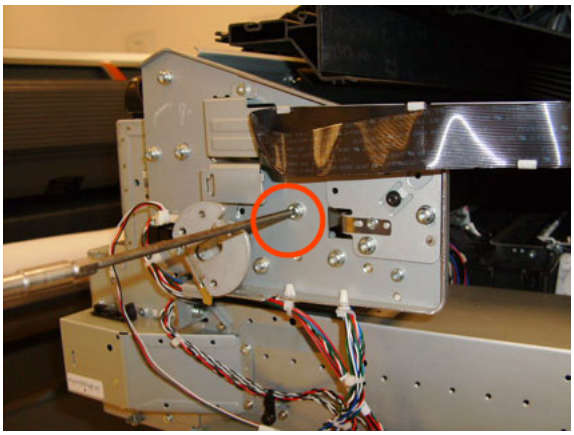

25. Leave the Belt Tensioner in place with all the tension removed.

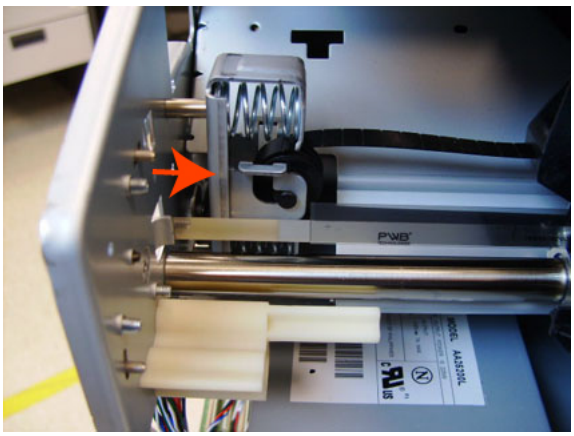

NOTE: The photo shows the 44-in product, which has one spacer just above the red arrow. The 24-in product has two spacers.

26. Remove the Belt Assembly from the Scan-Axis Motor drive wheel.

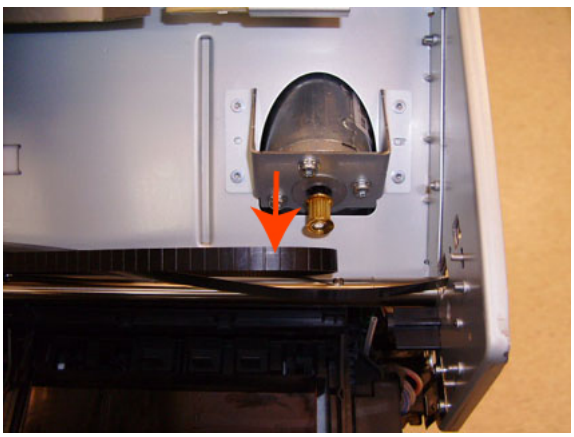

27. Remove the two T-10 screws that secure the Media Lever attachment plate.

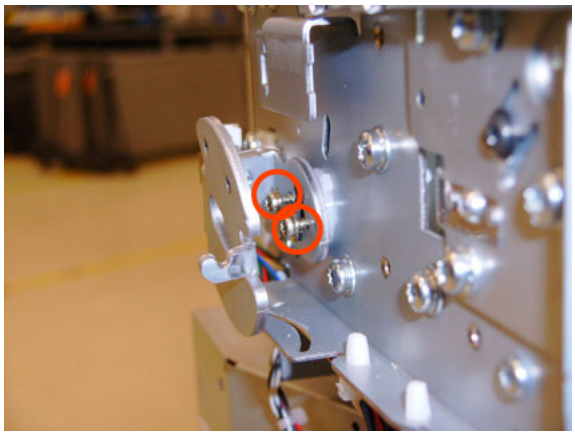

28. Remove the Media Lever attachment plate.

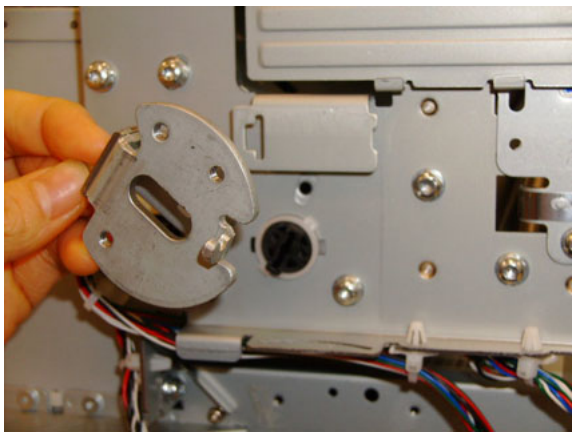

29. Disconnect the Pinchwheel Lifter Sensor, and unroute the cable.

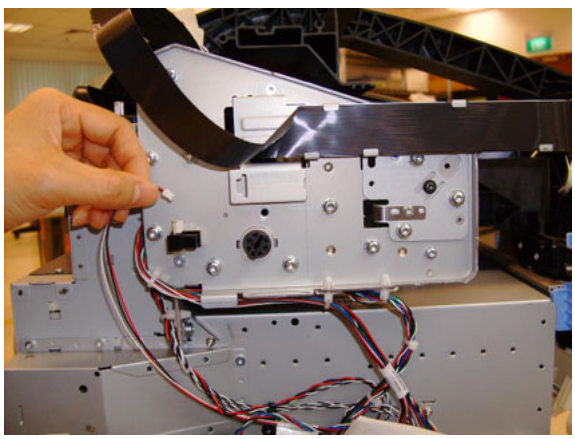

30. Remove two T-15 screws from the Trailing Cable Support.

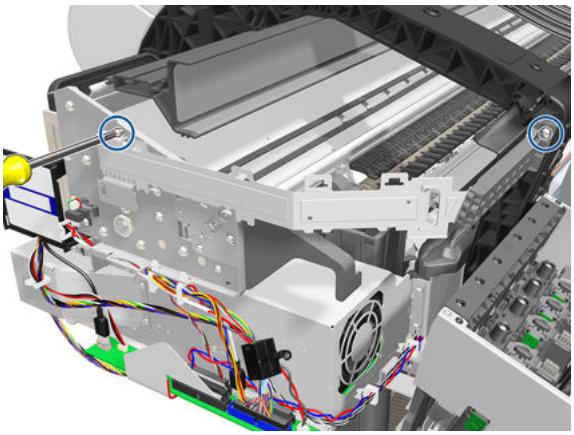

31. Remove the Trailing Cable Support.

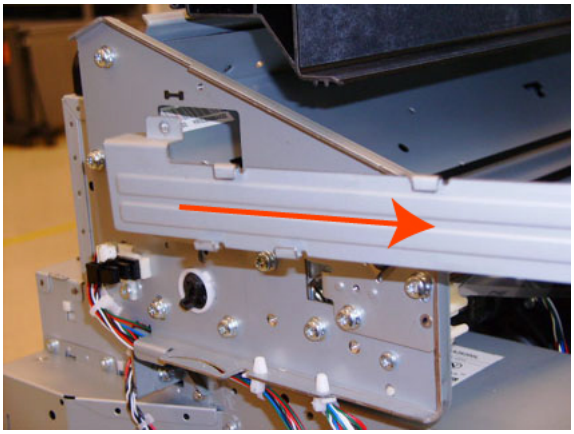

32. Remove the seven T-15 screws that secure the Scan Side Panel to the product.

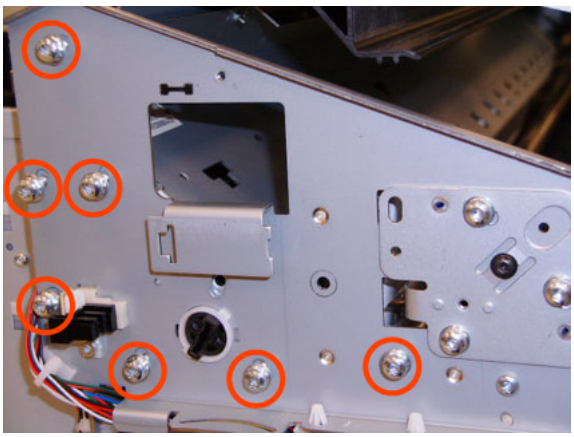

33. Remove the Scan Side Panel.

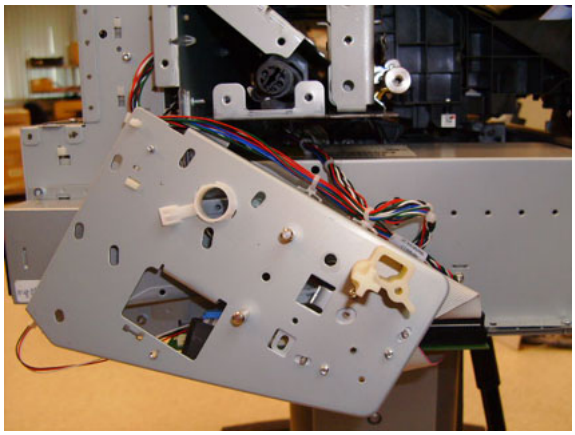

34. Carefully slide the Carriage Assembly and Belt Assembly out of the product (and the Trailing Cable if you are removing it with the Carriage Assembly).

CAUTION: Be careful not to damage the PRS Slider.

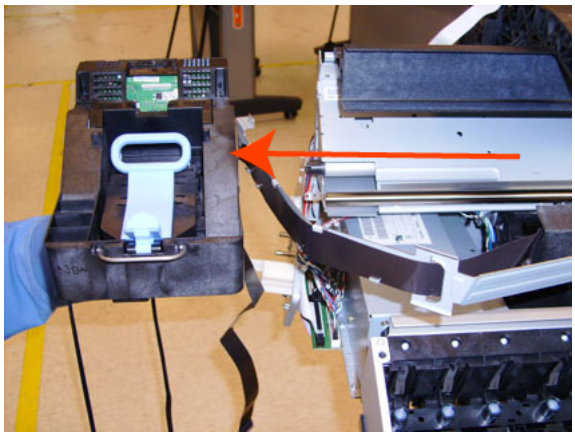

NOTE: When you reinstall the Carriage Assembly, take care not to damage the PRS Slider.

NOTE: When you finish installing or replacing this component, you must perform the necessary Service Calibrations. To find which calibrations you must perform, see Service Calibration Guide to Removal and Installation on page 267.

Cutter Assembly (Z2600/Z5600 only)

Removal

1. Switch off the printer and remove the power cable.
2. Remove the Left Cover Finishing Panel. See Left Cover on page 403
3. Fully loosen the cutter rail end cap attachment screw.

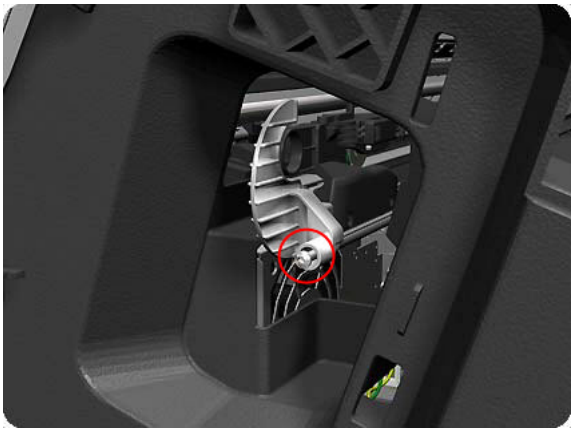

4. Remove the cutter rail end cap.

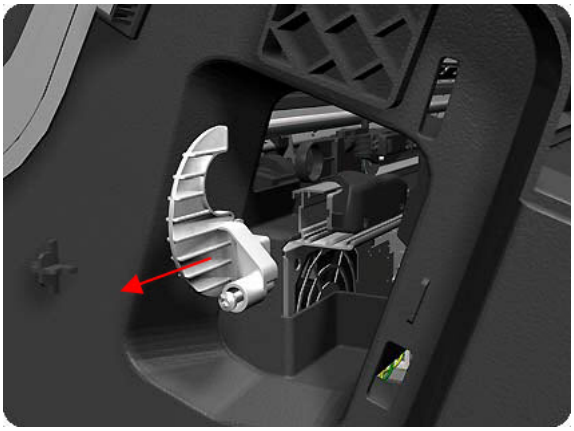

5. Slide the Cutter Assembly out of the printer.

NOTE: When you install the new Cutter Assembly, follow the installation instructions provided with it.

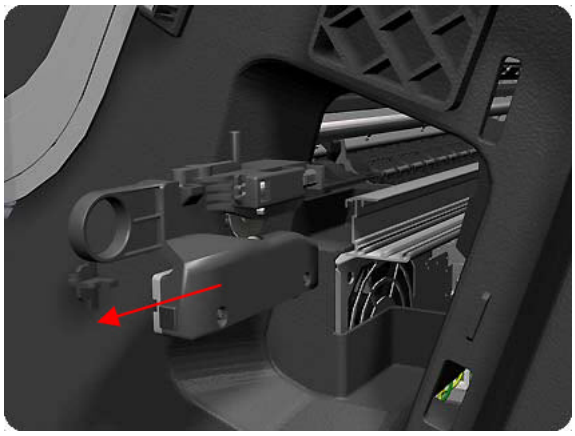

Carriage Bushing, Rear

Removal

1. Switch off the product and remove the power cable.
2. Remove the Front Cover on page 349.
3. Remove the Right Cover on page 463.
4. Remove the Left Cover on page 403.
5. Remove the Cutter assembly on page 556.
6. Remove the Touch Control Panel on page 533.
7. Remove the Front Top Cover on page 352.
8. Remove the Front Top Cover Assembly (MFP only) on page 350.
9. Remove the Scanner Position Sensor (MFP only) on page 516.
10. Remove the Encoder Strip, spring and attachment nut on page 367.
11. Remove the Carriage Assembly on page 242.
12. Squeeze the left hand clip of the Carriage Rear Bushing sufficiently to be able to release it from the Carriage Assembly.

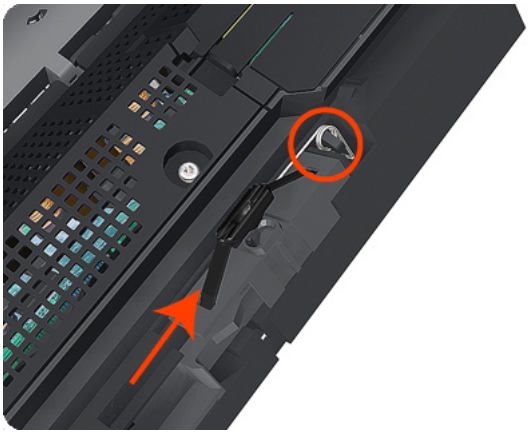

13. Rotate the Carriage Rear Bushing vertically and remove it from the Carriage Assembly.

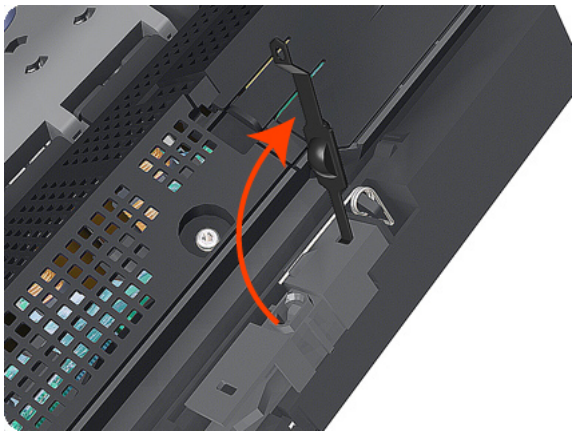

NOTE: When you reinstall the Carriage Rear Bushing, use the Oil and Oil Dispenser from the Lubrication Kit to add 2 or 3 drops of oil to the small depression in it.

NOTE: When you finish installing or replacing this component, you must perform the necessary Service Calibrations. To find which calibrations you must perform, see Service Calibration Guide to Removal and Installation on page 267.

Carriage Cover and Carriage Latch

Removal

1. Switch off the product and remove the power cable.
2. Remove the Right Cover on page 463.
3. Open the Carriage Cover.

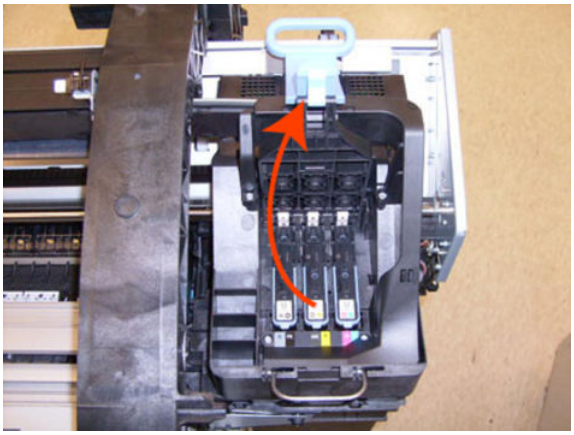

4. Remove all the Printheads.

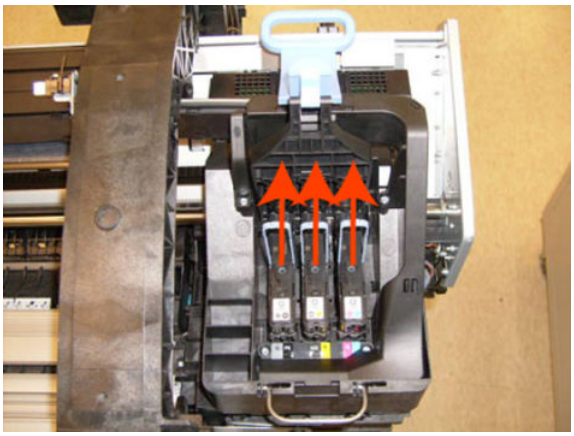

5. Unscrew the small cover of the Carriage PCA.

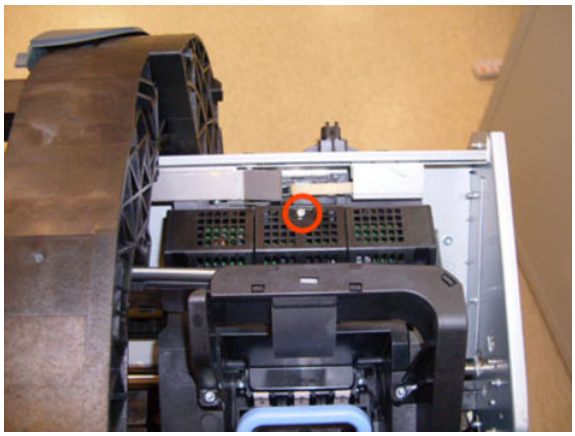

6. Remove the small cover of the Carriage PCA.

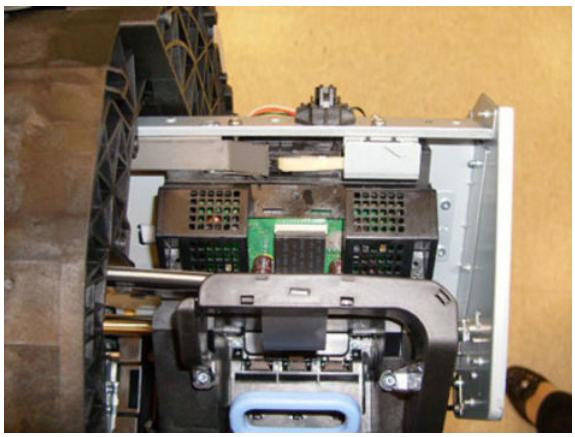

7. Disconnect the ribbon Trailing Cable from the Carriage PCA.

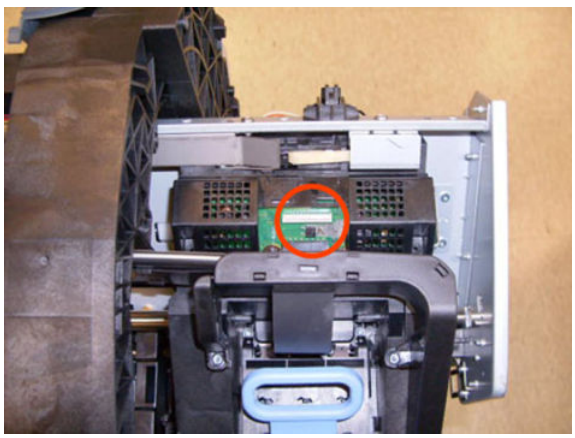

8. Remove the four T-15 screws that secure the Ink Supply Tubes to the Carriage Assembly.

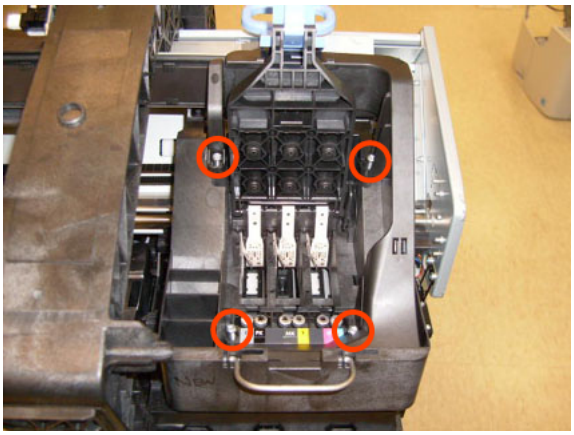

9. Carefully lift out the Ink Supply Tubes and close the carriage cover at the same time.

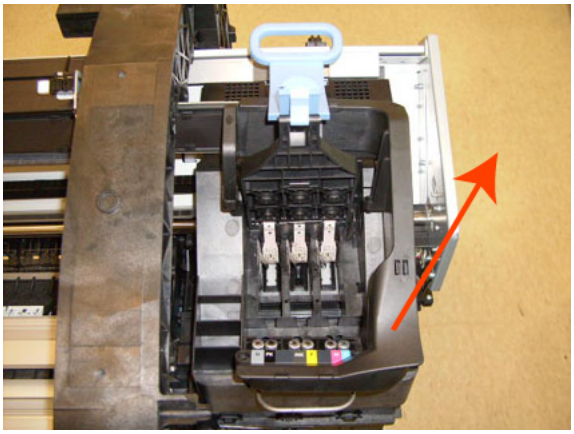

10. Close and lock the Carriage Cover.

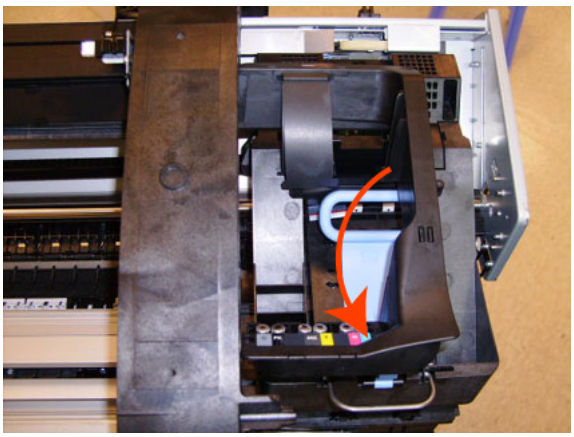

11. Carefully move the Ink Supply Tubes into the print path.

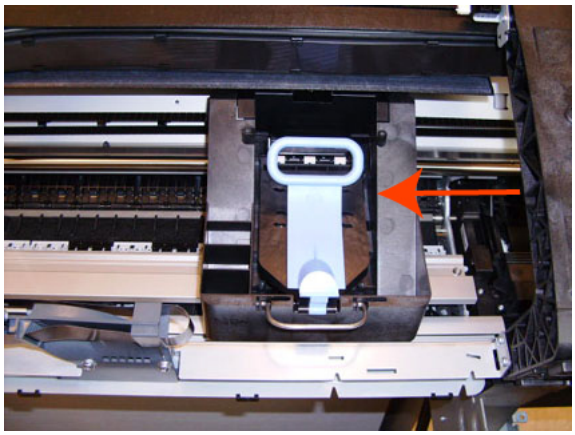

12. Remove the cover on each side of the Carriage PCA using a screwdriver to unclip it.

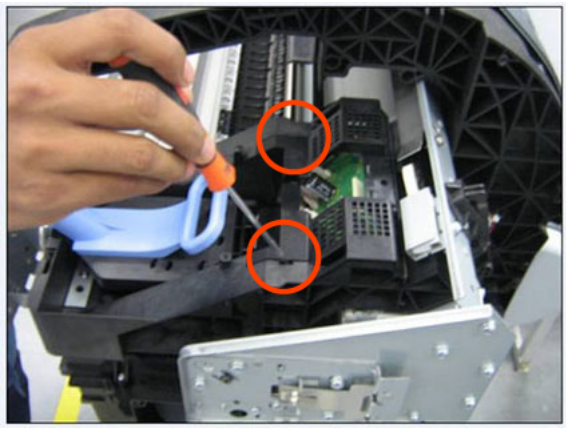

13. Disconnect the 6 ribbon cables of the Carriage Cover from the Carriage Assembly PCB.

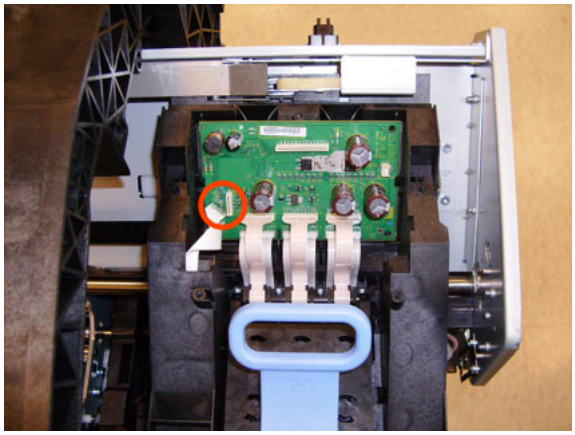

14. Remove four T-8 screws that secure the Carriage Assembly Cover hinge.

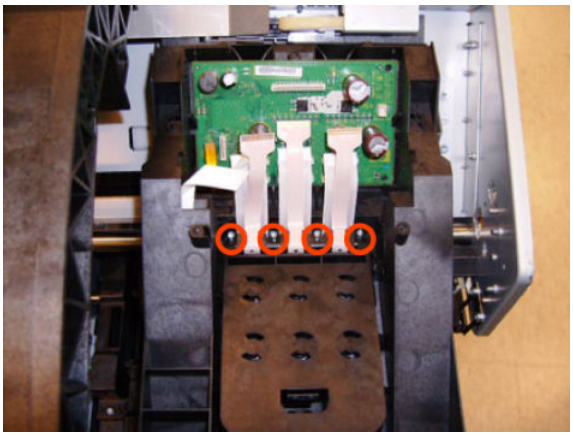

15. Carefully lift the Carriage Cover in the vertical position to remove it from the Carriage Assembly.

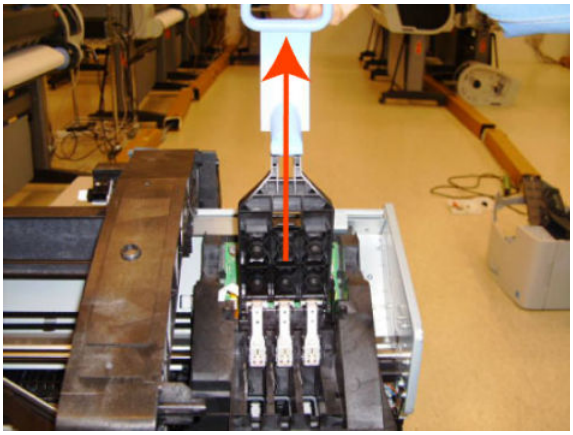

When you finish installing or replacing this component, you must perform the necessary Service Calibrations. To find which calibrations you must perform, see Service Calibration Guide to Removal and Installation on page 267.

Carriage Rail Oiler

Removal

1. Switch off the product and remove the power cable.
2. Remove the Right Cover on page 463.
3. Remove the T-20 Carriage Rail Oiler attachment screw.

4. Remove the Carriage Rail Oiler from the product.

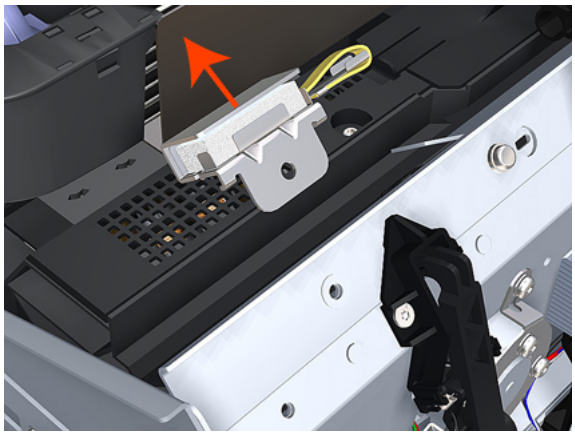

5. Add 2 or 3 drops of oil in the depression where the Slider fits.

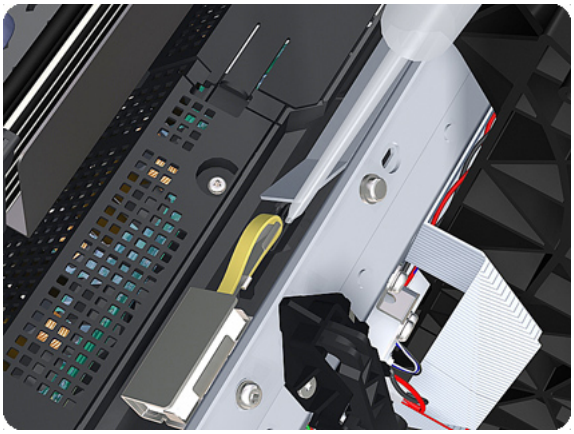

NOTE: When you reinstall the Carriage Rail Oiler, use the Oil and Oil Dispenser from the Lubrication Kit to add 2 or 3 drops of oil to the foam of the Carriage Rail Oiler and in the small depression of the Carriage Rear Bushing.

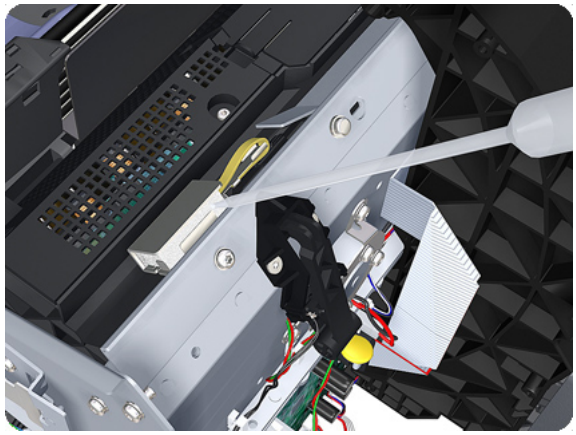

Carriage PCA

Removal

1. Switch off the product and remove the power cable.
2. Remove the Right Cover on page 463.
3. Open the Carriage Cover.

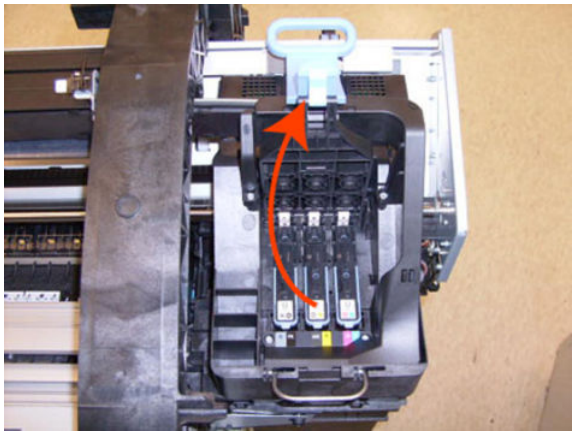

4. Remove all the Printheads.

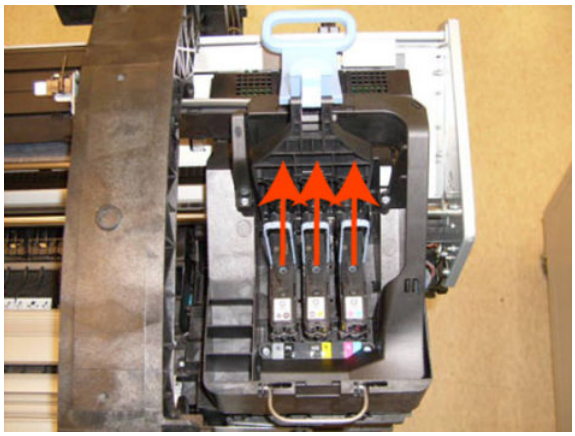

5. Unscrew the small cover of the Carriage PCA.

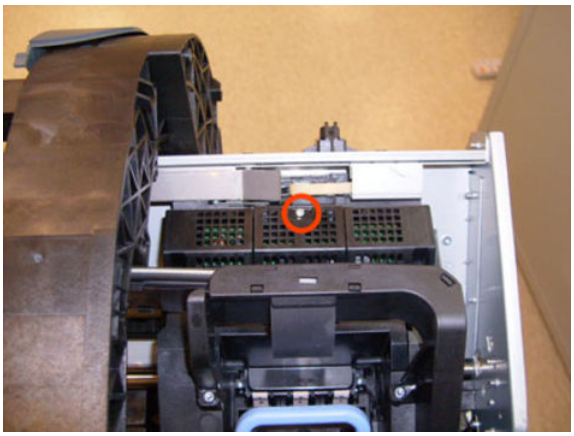

6. Remove the small cover of the Carriage PCA.

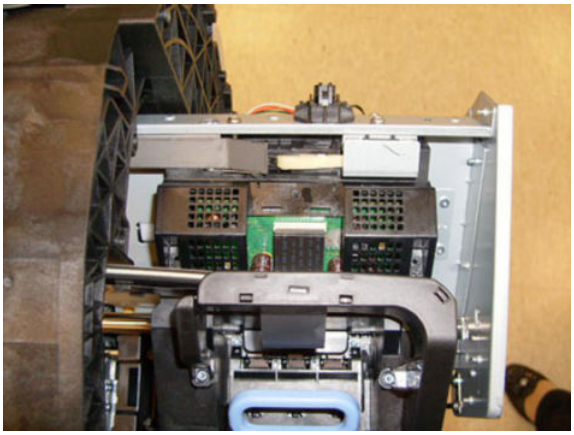

7. Disconnect the ribbon Trailing Cable from the Carriage PCA.

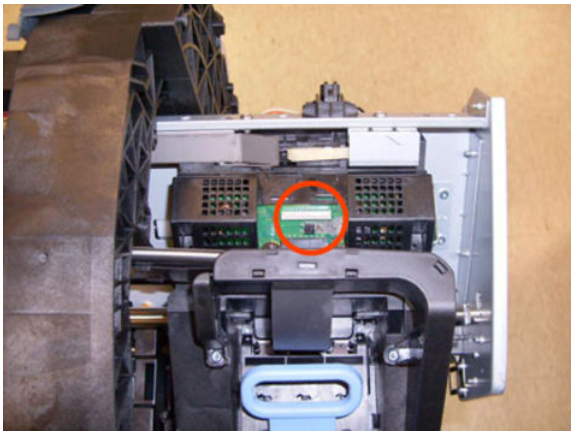

8. Remove the four T-15 screws that secure the Ink Supply Tubes to the Carriage Assembly.

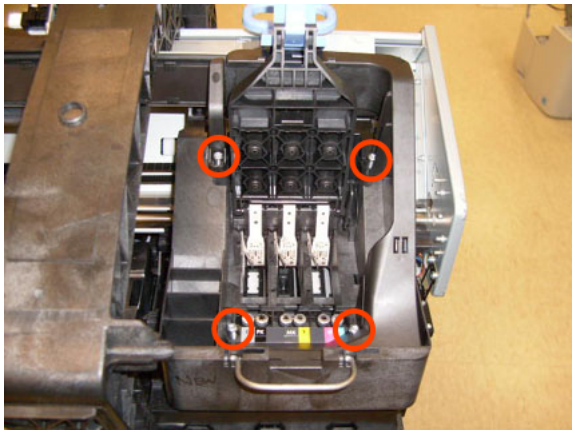

9. Carefully lift out the Ink Supply Tubes and close the carriage cover at the same time.

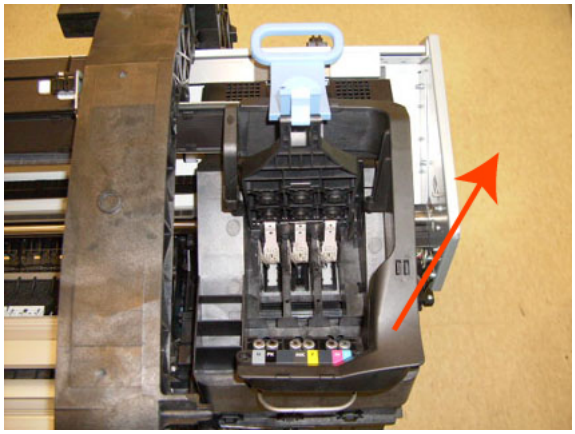

10. Close and lock the Carriage Cover.

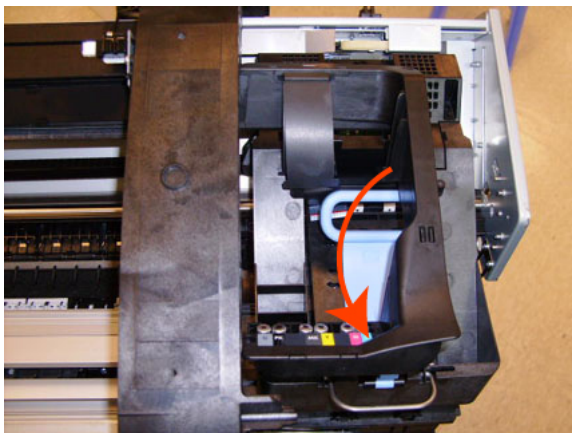

11. Carefully move the Ink Supply Tubes into the print path.

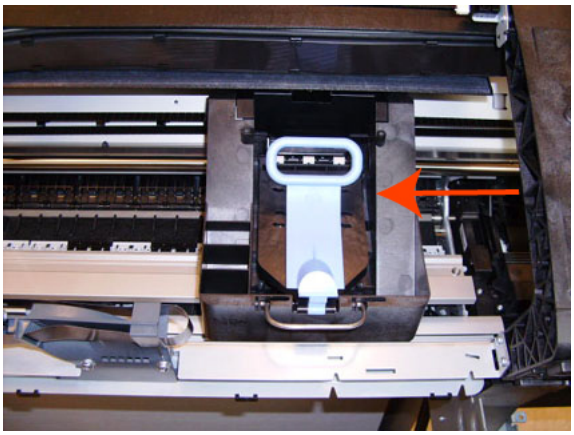

12. Remove the cover on each side of the Carriage PCA using a screwdriver unclip it.

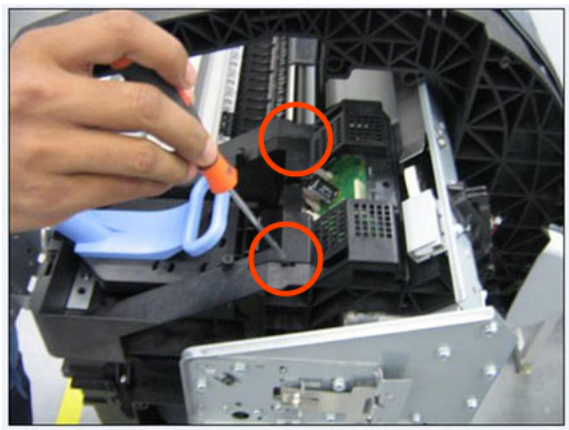

13. Disconnect all cables from the Carriage Assembly PCB.

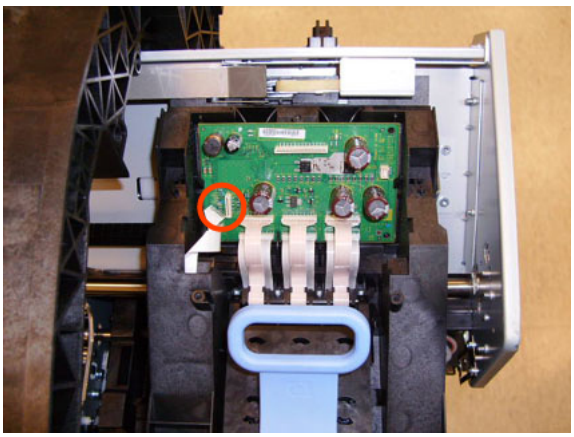

14. Press the locking clip to release the Carriage Assembly PCB from the carriage.

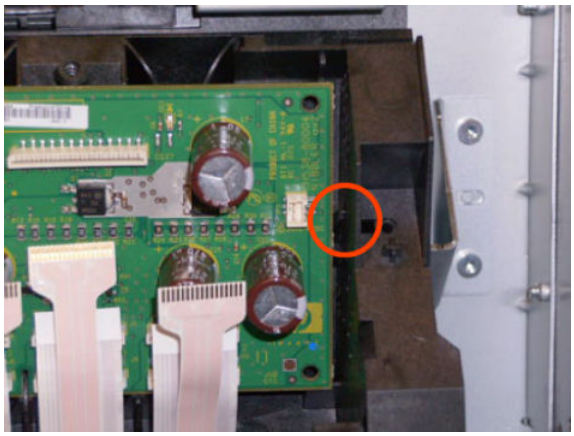

15. Remove the Carriage PCA from the carriage.

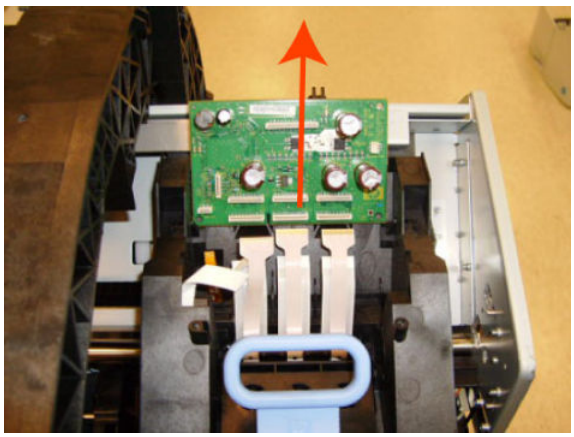

NOTE: When you finish installing or replacing this component, you must perform the necessary Service Calibrations. To find which calibrations you must perform, see Service Calibration Guide to Removal and Installation on page 267.

Cleanout

Removal

1. Switch off the product and remove the power cable.
2. Remove the Roll Cover, Lower on page 473.
3. Remove the Converger on page 334.
4. In order to avoid any damage to the paper sensor, you are recommended to introduce a sheet of A4 bond paper into the paper path, as shown, so that the paper sensor flag will be down and out of the way when you are handling the cleanout.

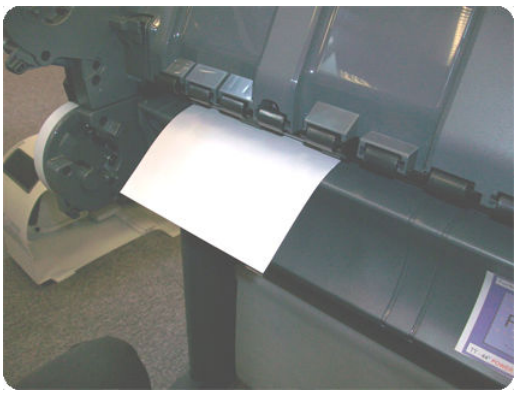

5. Unscrew four T-15 screws as shown.

6. Disconnect the paper sensor cable connector.

7. Extract the right side of the cleanout, as shown, and then the left side. Be careful with the paper sensor cable.

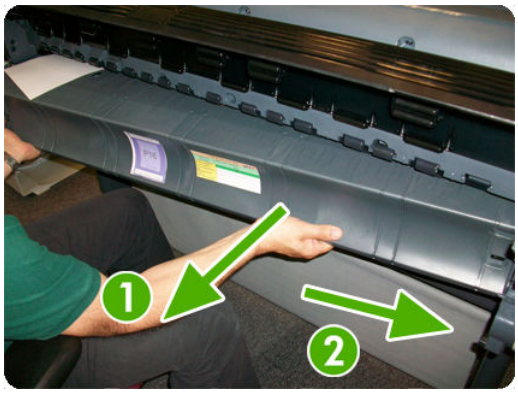

Center Support

Removal

1. Switch off the product and remove the power cable.
2. Remove the Cleanout on page 328.
3. Lift up the blue lever on the left.

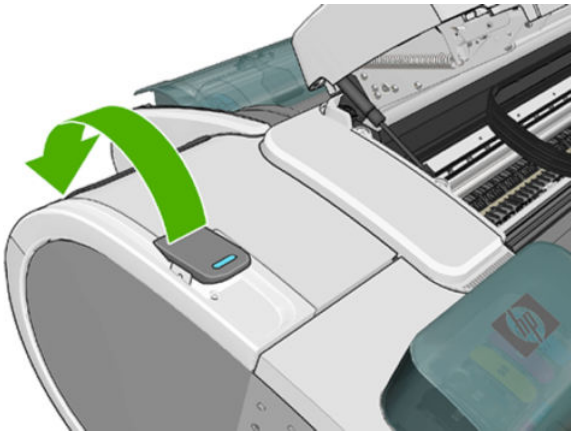

4. Remove one T-15 screw indicated (A). Do not loosen or remove the other screws

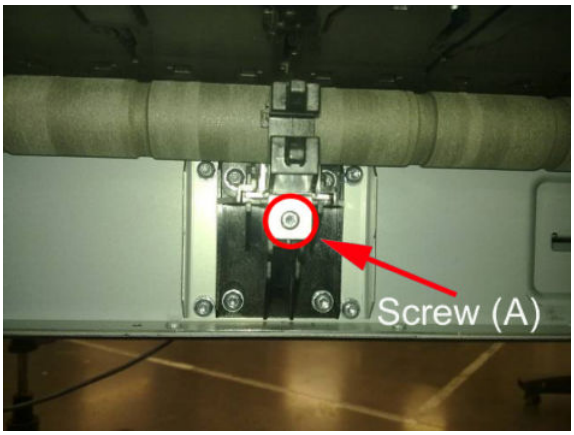

5. Do not remove the screws circled.

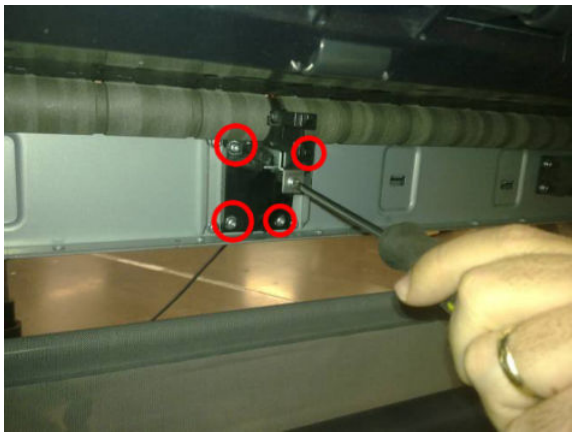

6. Remove the Slider Support. Use a flat end screw driver as a lever to remove the part.

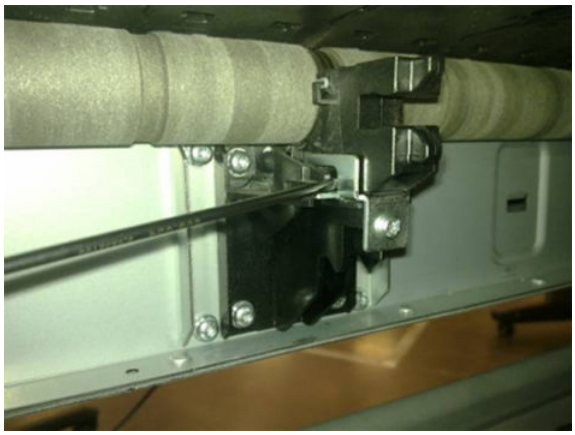

7. Clean the roller at the center support section, you can push with a dust cloth, while moving the center support from the print zone area and from the center support area.

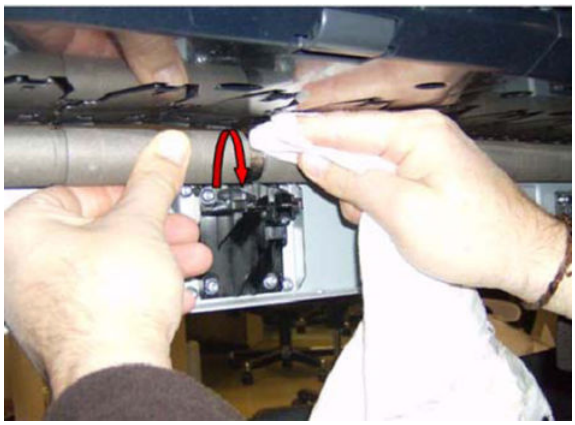

8. Remove as much of the metallic particles from the roller as you can. Use a dust cloth.

Installation

1. The two screws indicated here must be loose before installing the part.

2. Insert the slider on to the center support and tighten the T–15 screw indicated (A).

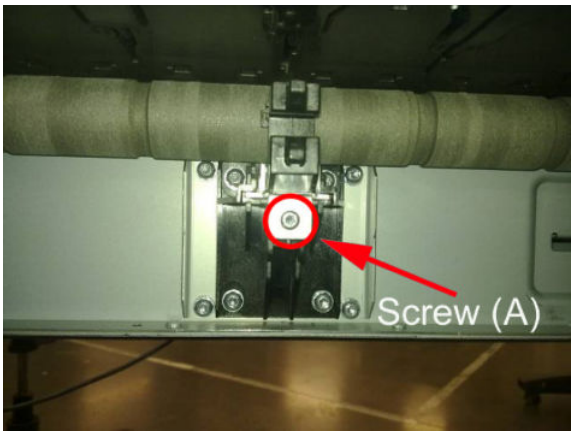

3. Adjust the center support. While pushing the plastic part of the slider center support against the roller (A), tighten loose screws B. To tighten the screws, insert the screw driver from below, in the direction indicated by the arrows

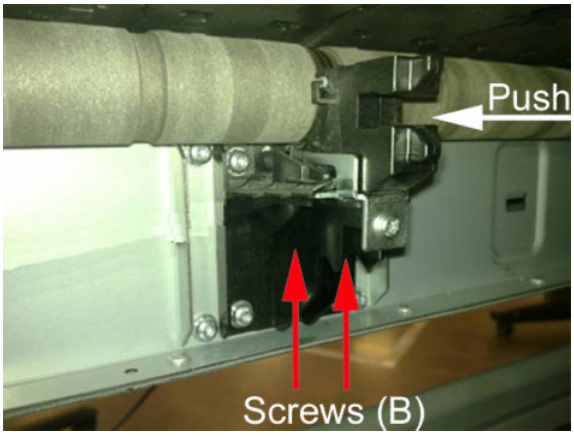

4. Install the Cleanout Cleanout on page 328

5. Move down the blue lever on the left.

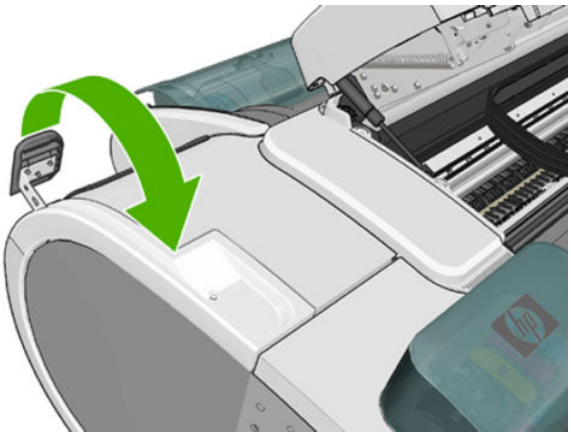

6. Perform the (PAX) Scan Axis Test on page 128.

Converger

Switch off the product and remove the power cable.

Removal

1. Open the upper roll cover and rewind the upper roll.
2. Remove the upper roll and spindle and close the upper roll cover.

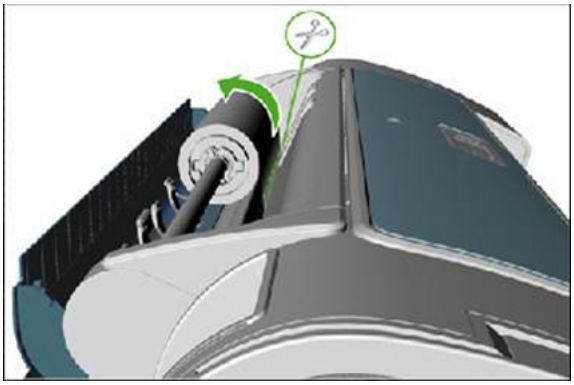

3. Rewind and remove the lower roll in the same way.
4. Remove the screw on the left side of the converger at the rear of the product.

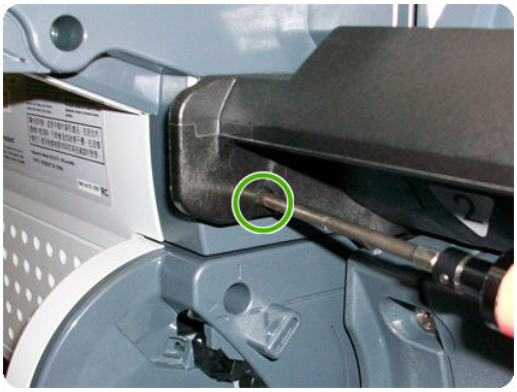

5. Move the converger slightly in the direction of the arrow.

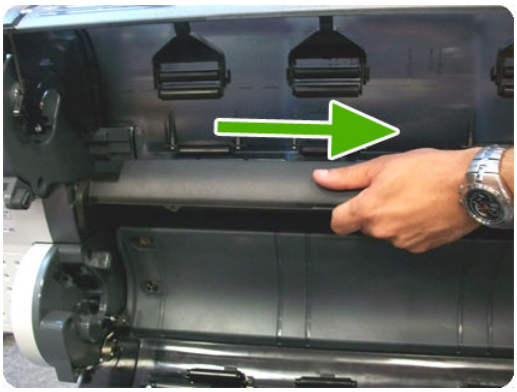

6. Move the right side of the converger in the direction of the arrow, then remove the whole converger from the product.

Installation

1. Replace the converger by inserting the right end into position first, and then pushing the handle into place.

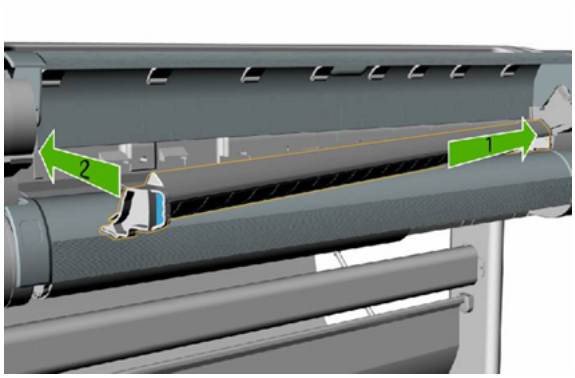

2. Replace the screw.
3. Replace and reload the rolls of paper.
4. Close the covers.

Scanner Piston Gas (MFP only)

1. Switch off the product and remove the power cable.
2. Remove the Left Scanner Cover (MFP only) on page 409
3. Open the Scanner.

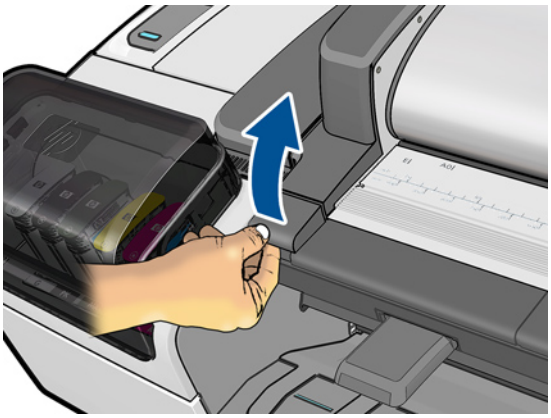

4. Remove the material from the packaging box and place it as in the picture, the scanner will rest on this box while the piston is being replaced.

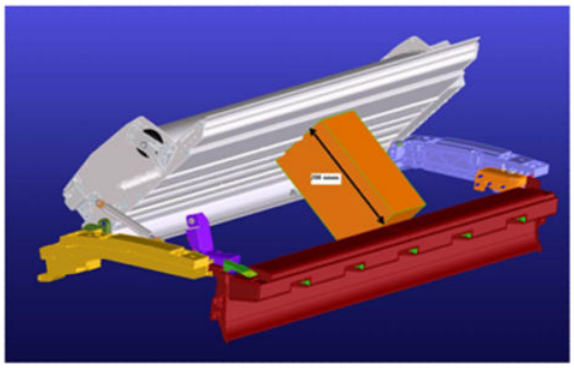

5. Remove screw and straight bushing.

6. Make sure the bushing and screw do not fall into the product's cavity by placing your hand underneath as you remove it. Reuse the screw later.

7. Remove the circilp on the other end of the piston gas using a flat screw driver, ensure that the circilp is kept under control by holding it with your left hand as shown in the picture. There are two spare circilps provided in the kit.

8. Install the circlip securing the new Piston in place as shown

9. Assemble back the straight bushing and screw as shown in the picture.

10. While screwing back the screw make sure that the weight of the scanner is handled by the installer to align the screw and the hole.

Scanner Bumper (MFP only)

1. Remove the Right Scanner Cover (MFP only) on page 467
2. Remove the hexagonal nut from the stopper with a 10 mm wrench key and a 8 mm wrench

3. Remove the Scanner Bumper by unscrewing it from the metal bracket in a counterclockwise direction.

Installation

The installation of the Scanner Bumper requires a small adjustment (included in the installation procedure) so that the paper is held by the part.

1. Insert the new bumper screw into the bracket and turn in a clockwise direction.

2. Continue to turn the bumper screw into the bracket until approximately 1 cm emerges from the other side of the bracket.

3. Turn the tip of the screw in an anti-clockwise direction.

4. Continue to turn the tip of the screw in an anti-clockwise direction until the tip of the screw is level with the surface (until it is flush).

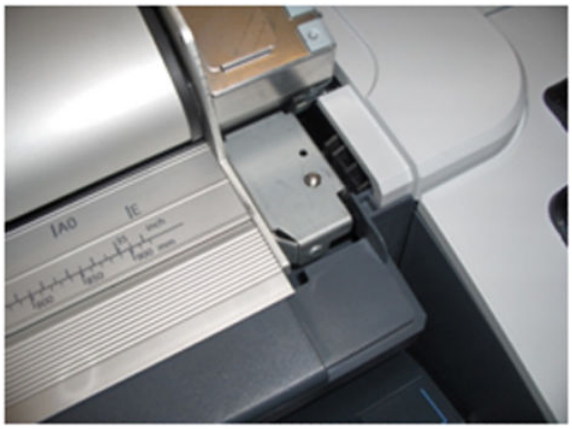

5. To adjust the bumper insert an allen key #10 into the screw as shown.

6. Hold the nut so that it does not turn as you make the adjustment. Turn the allen key one revolution.

7. While securing the screw with a 10 mm wrench key, use an 8 mm wrench to tighten the nut.

8. In order to check if the adjustment is correct, place a strip of paper as shown in the picture, on the flat surface of the right interface bracket and close the scanner .

9. If the bumper is correctly adjusted it should hold the paper.

Right Collar Cover (MFP only)

⚠ CAUTION: When removing the Right Collar Cover be careful not to damage sensor actuator.

Removal

1. Switch off the product and remove the power cable.
2. Remove the Right Scanner Cover (MFP only) on page 467
3. Remove the Right Cover on page 463.
4. Remove two T-15 screws that secure the Right Collar Cover to the product.

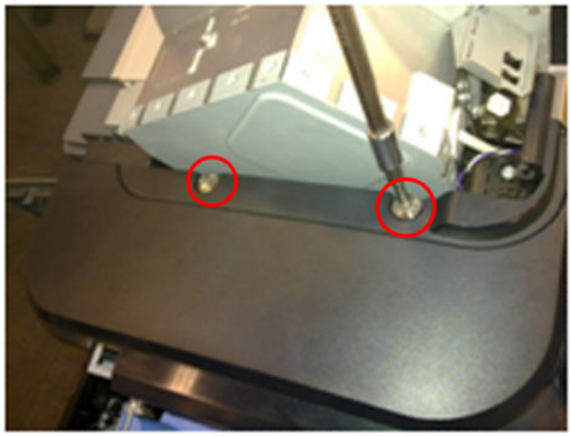

5. Remove the Scanner Position Sensor from the holder, unclip it by pushing the retaining clips in the direction shown.

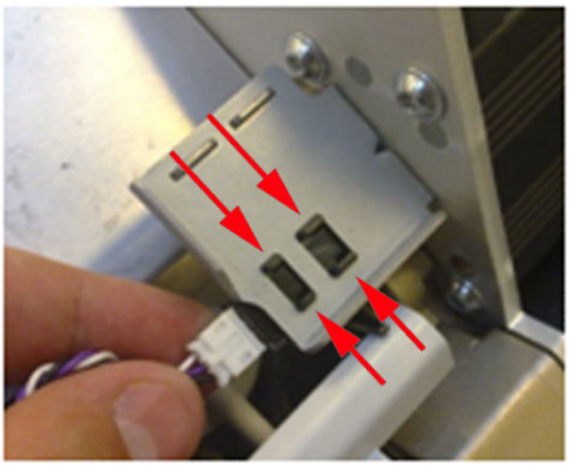

6. Remove the sensor

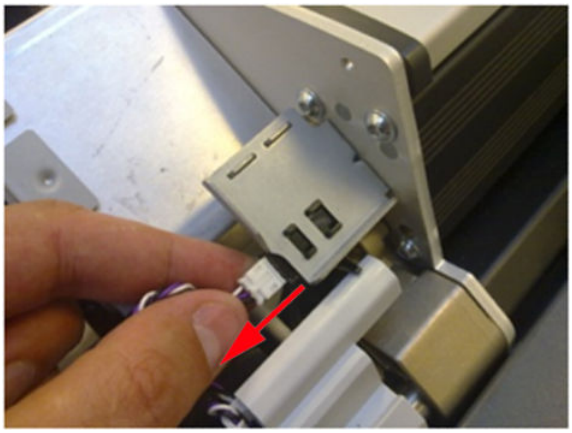

7. Remove sensor cable from Right Collar Cover anchor feature

8. Leave the sensor to one side to remove the collar

9. Remove the collar by sliding it in the direction indicated

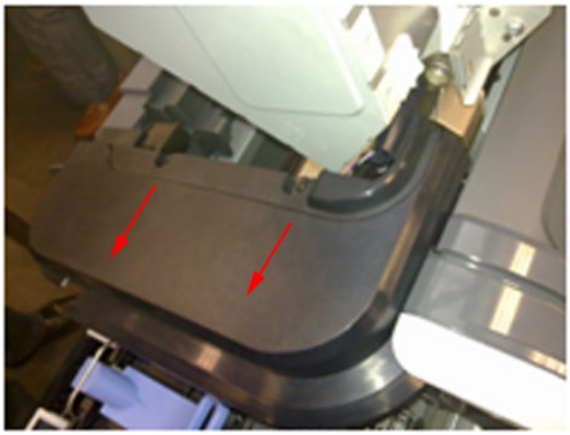

Installation

Installing the Right Collar is the same as the removal procedure, however care must be taken with the Cable and Sensor of the Scanner Position sensor. Shown below is the procedure for correctly reinstalling this part.

1. With the Scanner open, reinstall the Scanner Position sensor onto the holder by pushing the sensor assembly from the back.

2. Close the Scanner.

3. Ensure that cable of Scanner Position cable is as shown below.

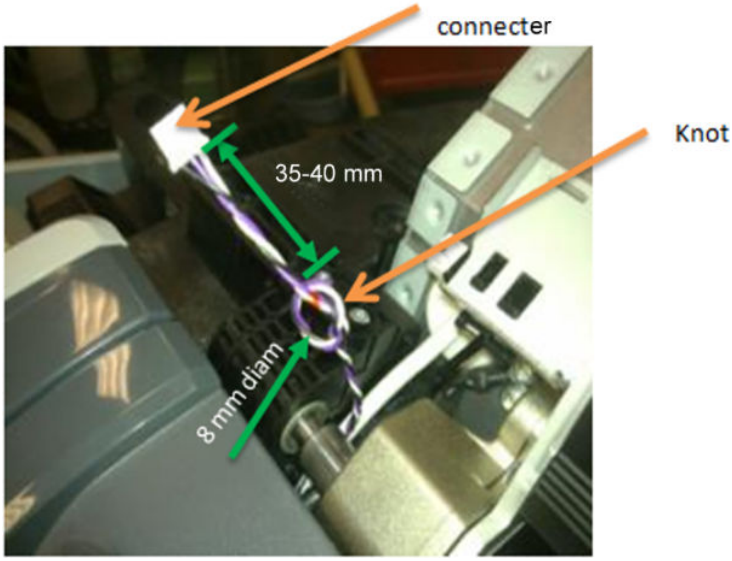

4. Anchor the knot of the cable on to the small clip of the Right Collar.

5. Ensure the knot of the cable is correctly placed on the clip as shown here.

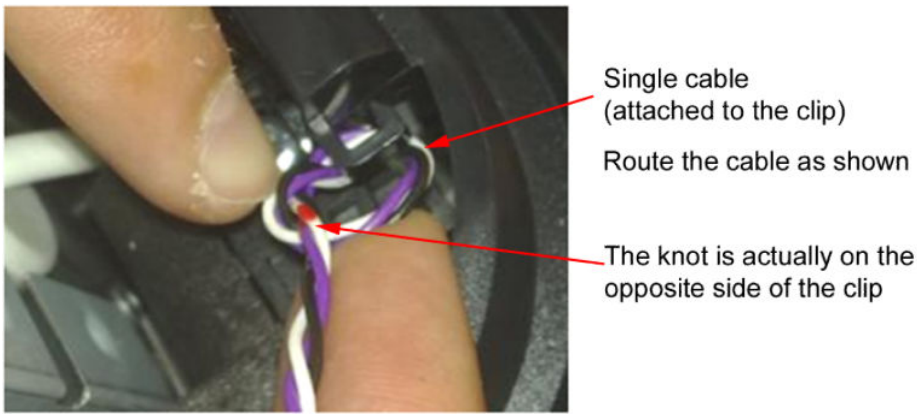

6. Once in the clip of the collar, pull slightly from the white connector in the direction of the arrow until the knot is fully attached.

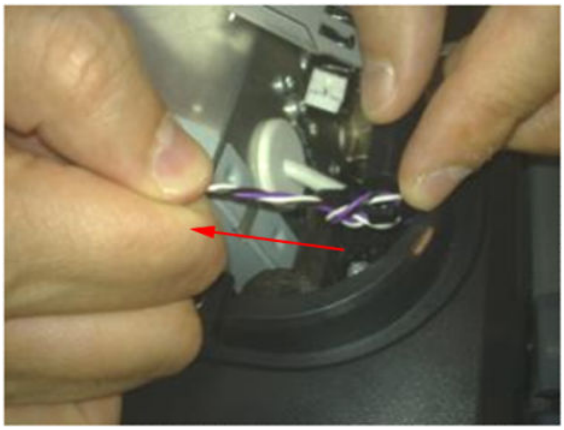

7. Make sure that the cable length is now 50-55 mm long from the knot to the connector.

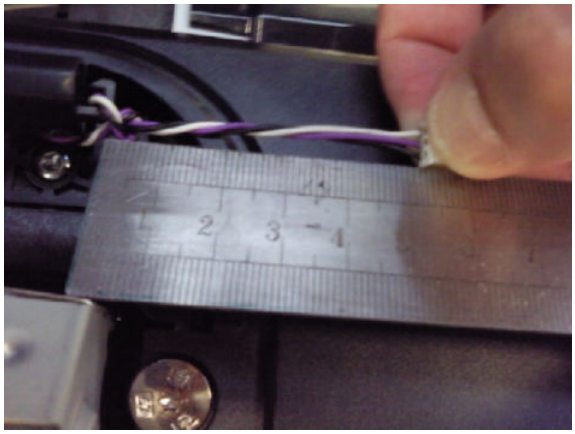

8. Connect the cable.

9. Push the knot of the cable in the direction of the arrow (if needed) .

10. Make sure that the cable is long enough when the scanner is in open position

⚠ CAUTION: If the cable of the Scanner Position Sensor is too long it may be become trapped between the Right Scanner Cover and the Right Collar

Front Cover

Removal

1. Switch off the product and remove the power cable.
2. Squeeze each of the four attachment clips under the Front Cover, to release the cover from the product.

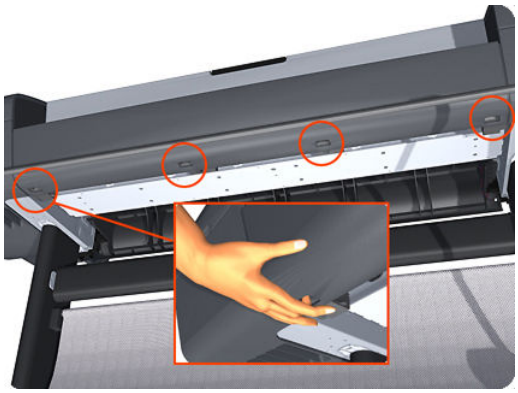

3. Carefully pull the bottom of the Front Cover forwards until you can release it from its attachments.

4. Unhook the Front Cover from the four attachments and remove it from the product.

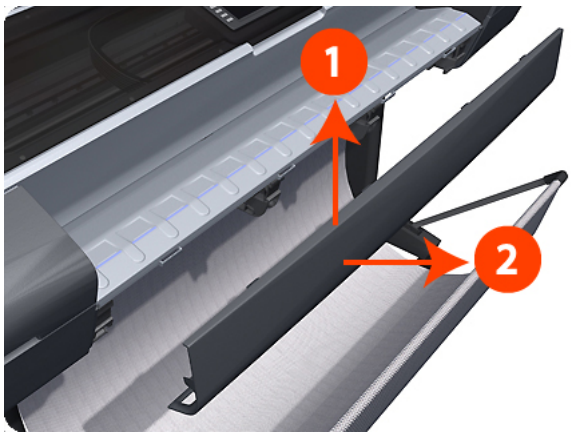

Front Top Cover Assembly (MFP only)

1. Remove the Right Scanner Cover (MFP only) on page 467
2. Remove the Left Scanner Cover (MFP only) on page 409
3. Remove the Right Cover on page 463
4. Remove the Left Cover on page 403
5. Remove the Right Collar Cover (MFP only) on page 342
6. Remove the Left Collar Cover (MFP only) on page 402
7. Remove three screws from the Left Ink Trim (no need to remove the Left Ink Trim).

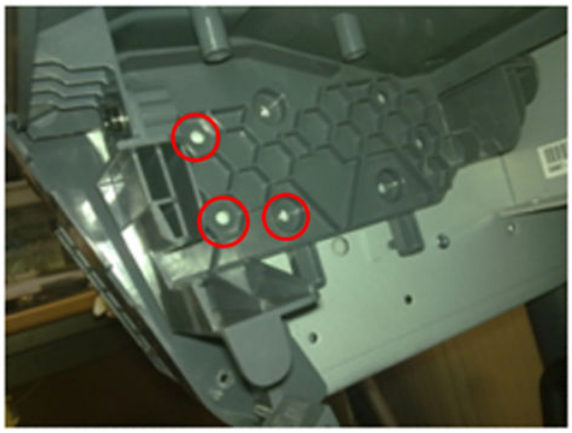

8. Remove three screws from the Right Ink Trim (no need to remove the Right Ink Trim).

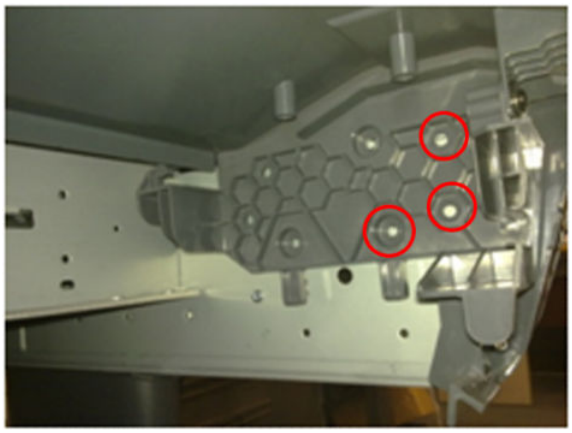

9. Remove one T-15 screw that secures the Front Top cover to the right arc.

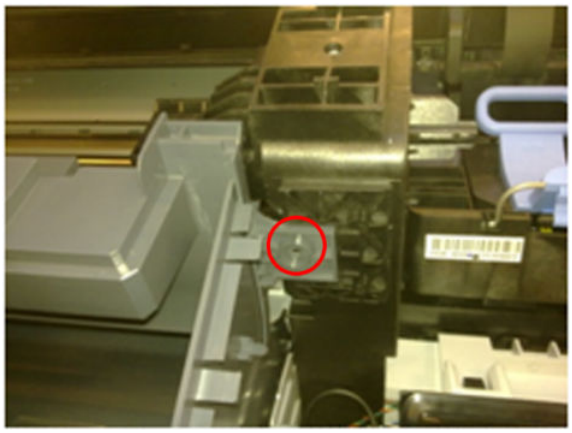

10. Remove one T-15 screw that secures the Front Top cover to the left arc.

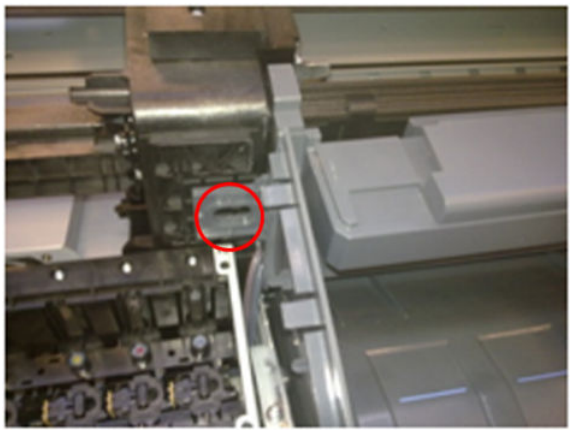

11. Lift up the Front Top Cover by adjusting the trims.

Front Top Cover

Removal

1. Switch off the printer and remove the power cable.
2. Remove the Window on page 536.
3. Remove the Right Cover on page 463.
4. Remove the Left Cover on page 403.
5. Remove the Rear Cover on page 460.
6. Remove the four T-15 top screws that secure the Top Cover to the printer.

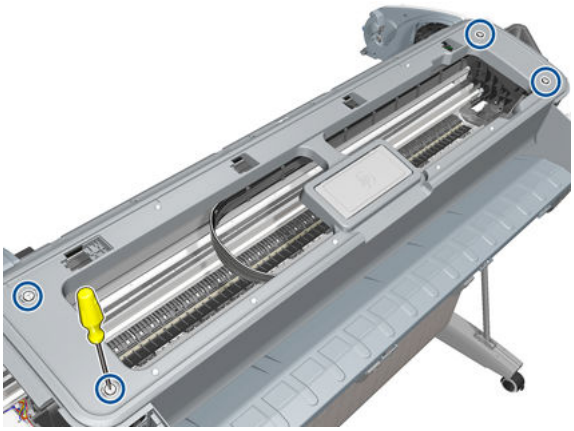

7. Remove the front T-15 screw that secures the front left side of the Top Cover to the printer.

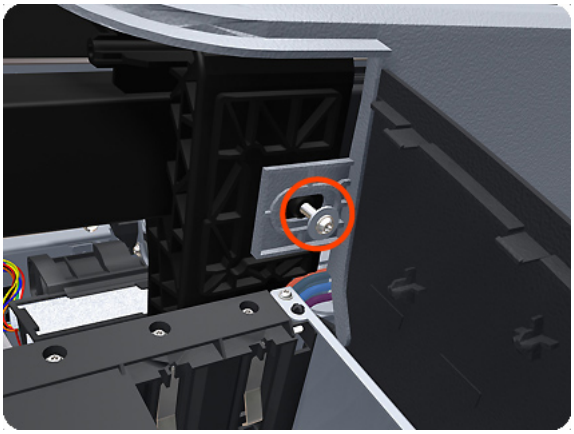

8. Carefully pull the attachment clip forward until you can lift the bottom left corner of the Top Cover approximately 10 mm.

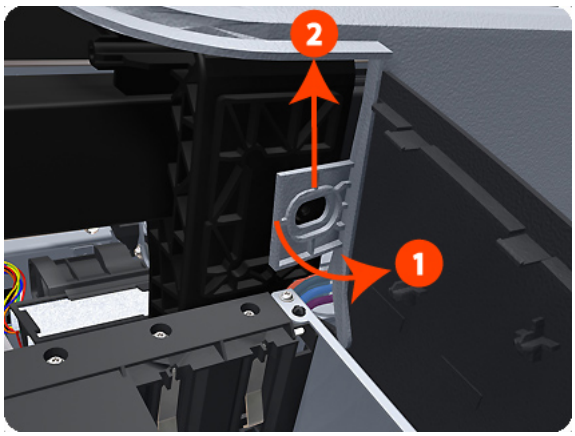

9. Remove the front T-15 screw that secures the front left side of the Top Cover to the printer.

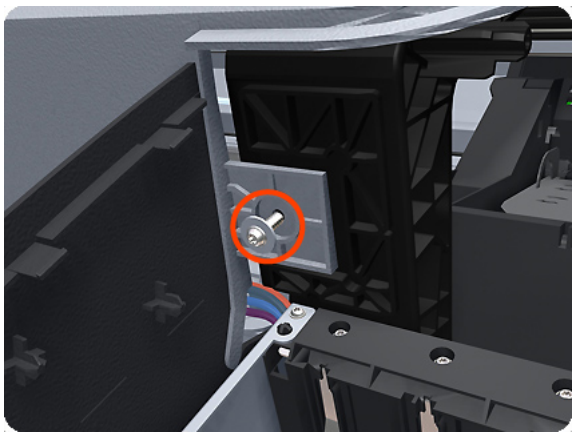

10. Carefully pull the attachment clip forward until you can lift the bottom left corner of the Top Cover approximately 10 mm.

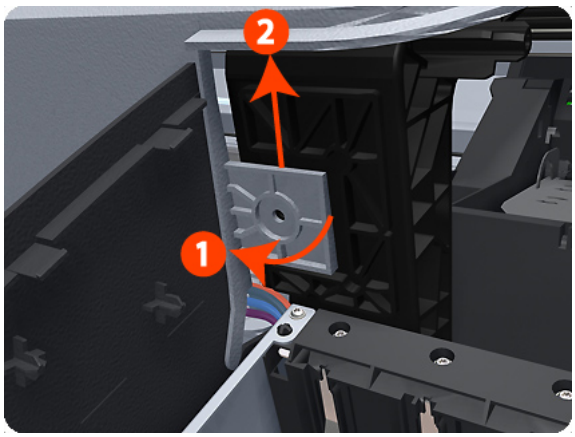

11. Lift the Top Cover of the printer sufficiently to gain access to the Touch Control Panel ribbon cable.

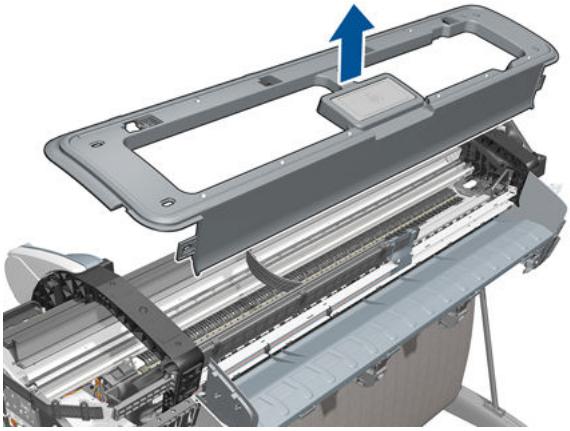

Drop Detector

Removal

1. Switch off the product and remove the power cable.
2. Remove the Right Cover on page 463.
3. Remove the Service Station on page 495.
4. Unroute the Drop Detector ribbon cable from the Service Station cable clamps.

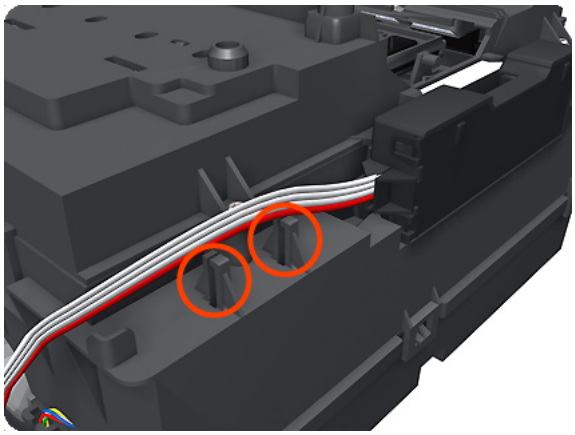

5. Remove the T-10 screw that secures the Drop Detector to the Service Station.

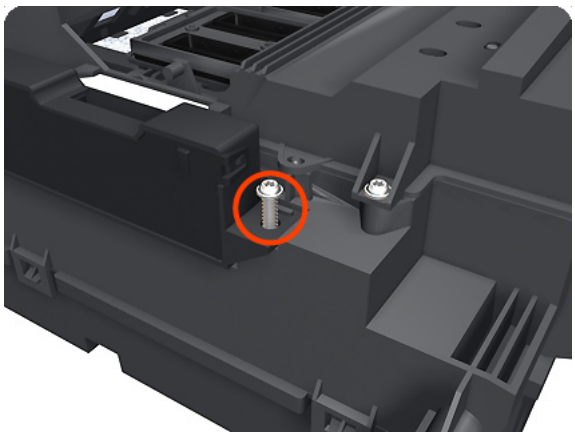

6. Lift the Drop Detector off the Service Station.

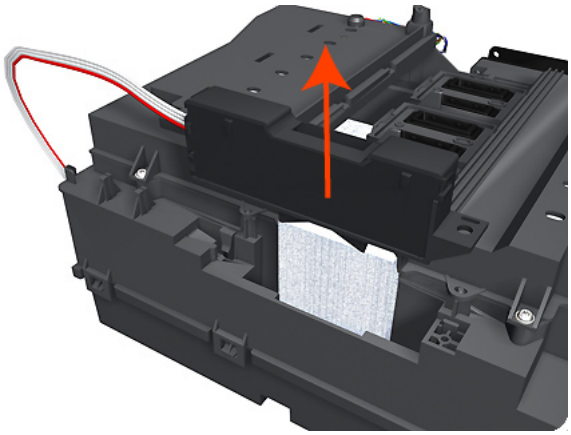

NOTE: When you finish installing or replacing this component, you must perform the necessary Service Calibrations. To find which calibrations you must perform, see Service Calibration Guide to Removal and Installation on page 267.

Aerosol Fan Assembly

Removal

1. Switch off the product and remove the power cable.
2. Remove the Right Cover on page 463.
3. Disconnect the Aerosol Fan Assembly inline connector.

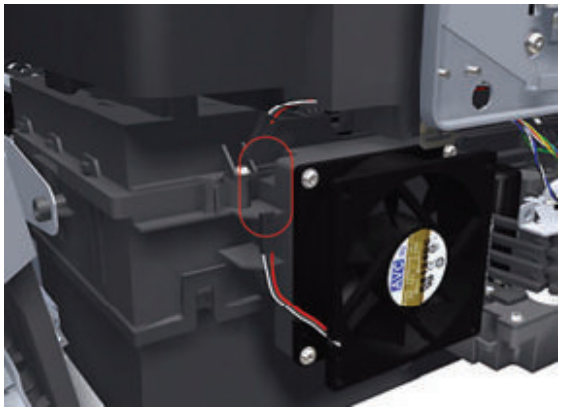

4. Remove the four T-15 screws that secure the Aerosol Fan Assembly to the Service Station.

NOTE: The four access holes in the Aerosol Fan Assembly housing are the same size as the attachment screw diameter so you will need a normal Torx Screwdriver, not a multi-tool, to remove the screws.

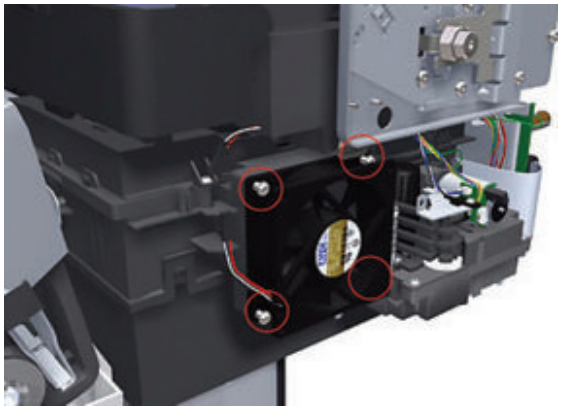

5. Remove the Aerosol Fan Assembly from the Service Station.

NOTE: When you reinstall the Aerosol Fan Assembly make sure you position it so that the power cable is on the outside exiting to the right.

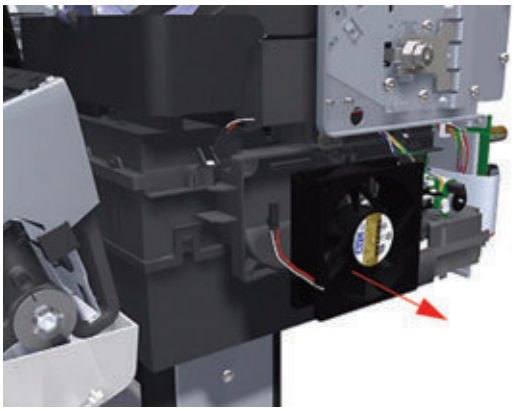

NOTE: When you finish installing or replacing this component, you must perform the necessary Service Calibrations. To find which calibrations you must perform, see Service Calibration Guide to Removal and Installation on page 267.

EE Box

NOTE: The installation section of this procedure contains an important note that is critical to the correct installation/reinstallation of this part.

Removal

1. Switch off the product and remove the power cable.
2. Remove the Left Cover on page 403.

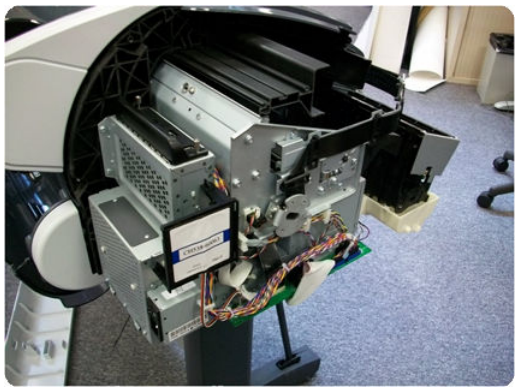

3. Remove all connectors from the Engine PCA.

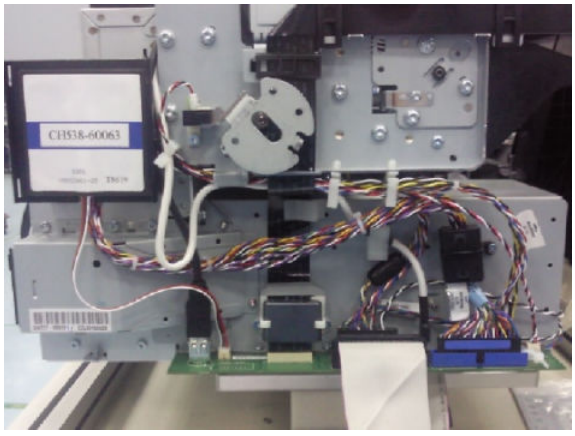

For Z2600/Z5600 only:

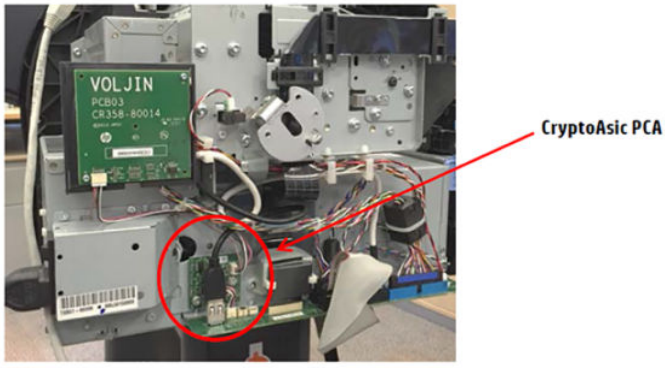

4. Remove the screw that fastens the Ferrite on the Data Harness to the EE Box.

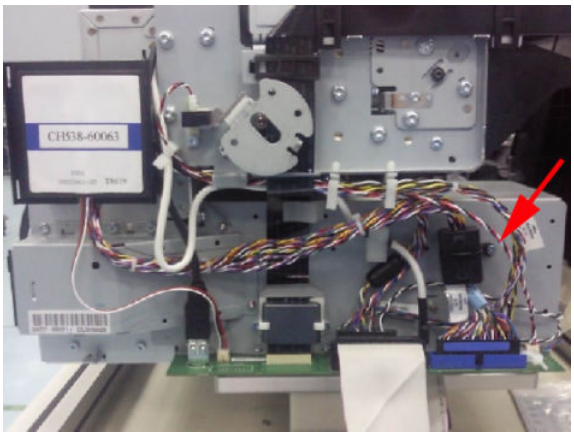

5. Remove the Ferrite from the Trailing Cable without removing its plastic holder that is fastened to the EE Box.

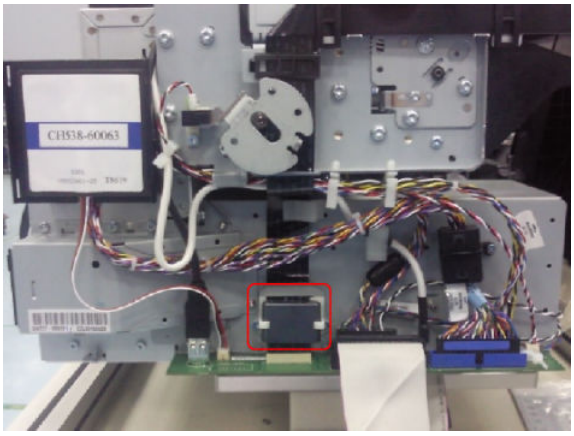

6. Unclip the cables from the cable ties.

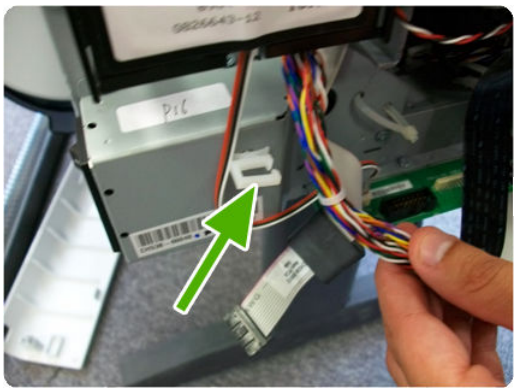

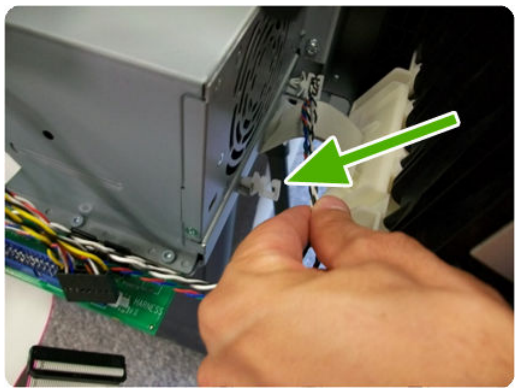

7. Remove the four screws shown in the pictures..

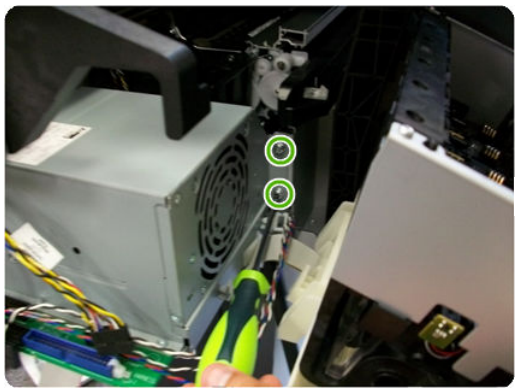

8. Remove the RFID support.

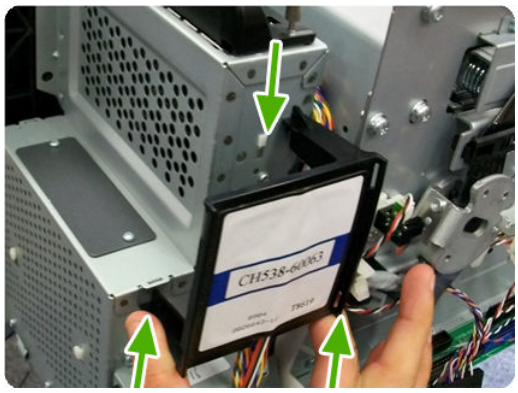

9. Remove the three screws shown in the pictures

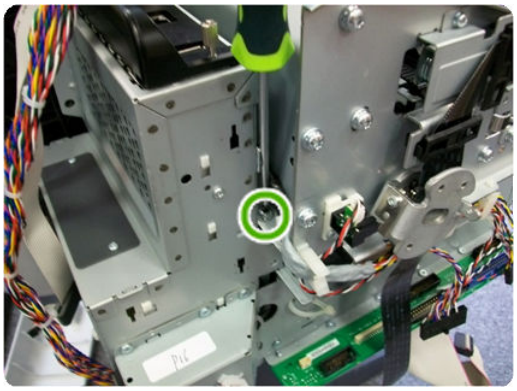

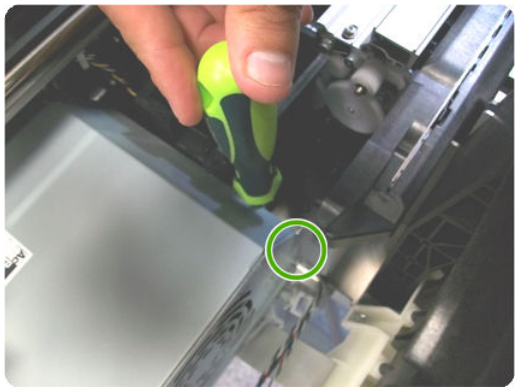

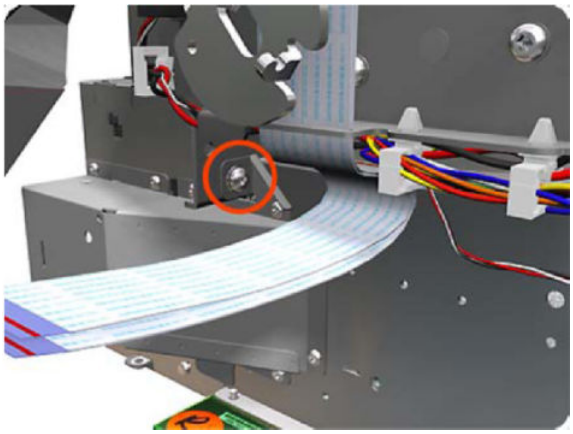

10. Unclip the ISS cable from the cable ties.

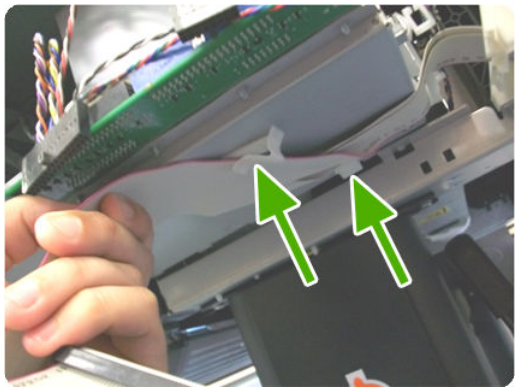

NOTE: When reinstalling/installing the USB Ext Host cable, you must leave the cable tightened behind the Service Station using the cable tie. Put the tie in position and pull from the cable to the front so that the cable goes straight to the other end. This is to prevent the cable from being trapped when installing the Right Cover.

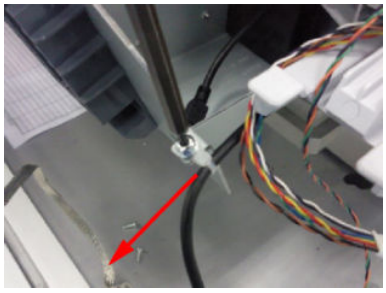

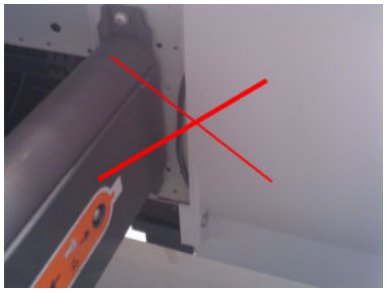

11. Carefully remove the EE Box out of the product.

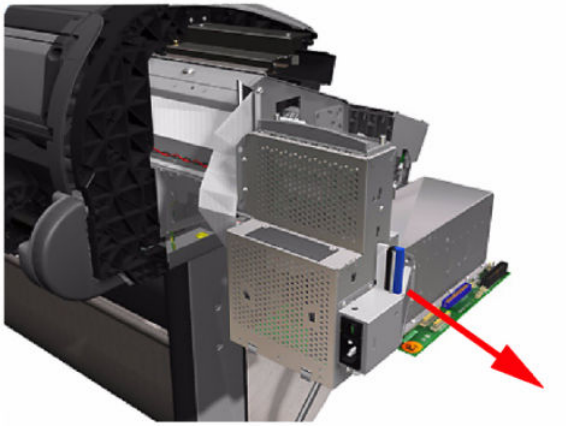

Installation

▲ When installing/reinstalling the EE Box make sure the Data Harness and ISS Harness Cable are connected correctly into the Engine PCA. These two connectors can be swapped in error causing a SE 22.1:10. Refer to Connecting the Data Harness and ISS Harness Cable on page 292

NOTE: **(Z2600/Z5600 only)** After replacing the Engine PCA (T0B51-67002) and/or the CryptoAsic PCA (T0B51-67024), it is mandatory to boot the printer, enter in the **Diagnostics Menu**, and execute the **CryptoAsic PCA Utility**. For more information, check Diagnostics Menu on page 125 and CryptoAsic PCA Utility on page 164.

Encoder Disk and Encoder Sensor

NOTE: Never install a previously used Encoder Sensor PCA. This can cause serious problems, and may make the product unusable.

Removal

1. Switch off the product and remove the power cable.
2. Remove the Left Cover on page 403.
3. Remove the EE Box on page 359.
4. Remove the Spittoon, Left on page 503.
5. Remove the Encoder Disk from the Media Advance Roller spindle, and lift it straight out of the product.

   NOTE: The Media Advance Roller spindle is delicate. Remove the Encoder Disk gently.

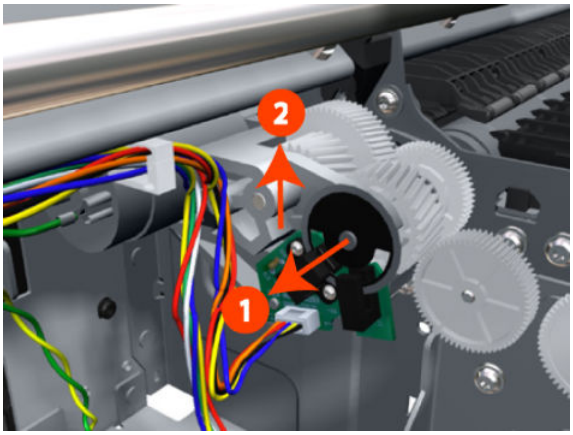

6. Disconnect the two Encoder Sensor connectors.

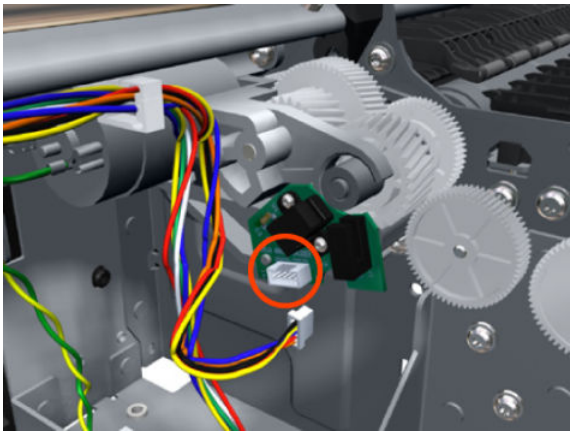

7. Remove two T-6 screws that secure the Encoder Sensor to the Media Advance Drive.

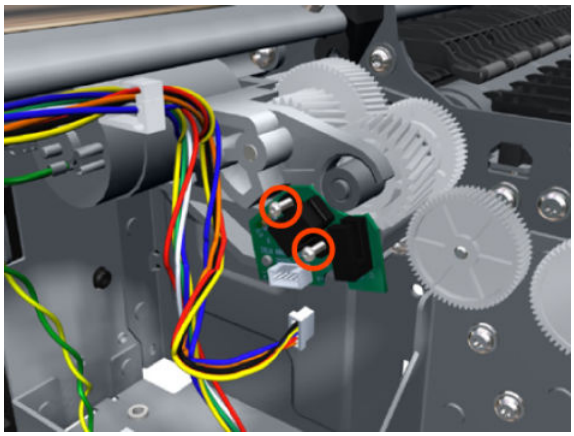

8. Remove the Encoder Sensor PCA from the product.

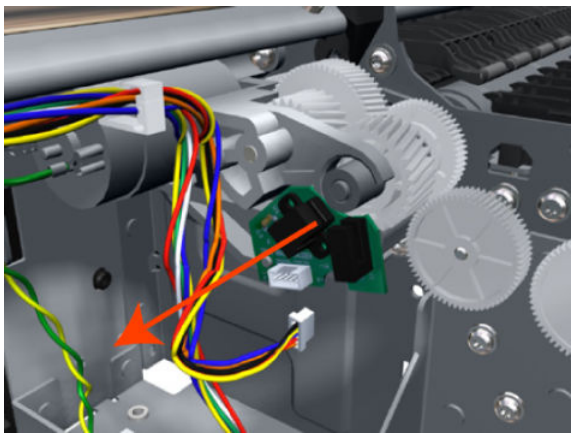

Encoder Strip

For information about the Encoder Strip service parts, see Scan-Axis Assemblies on page 244.

Removal

1. Switch off the product and remove the power cable.
2. Remove the Right Cover on page 463.
3. Remove the Left Cover on page 403.
4. Remove the Encoder Strip, spring and attachment nut on page 367.
5. Use the spanner provided in the tool kit to remove the 13 mm locking nut that secures the Encoder Strip to the Encoder Strip Spring.

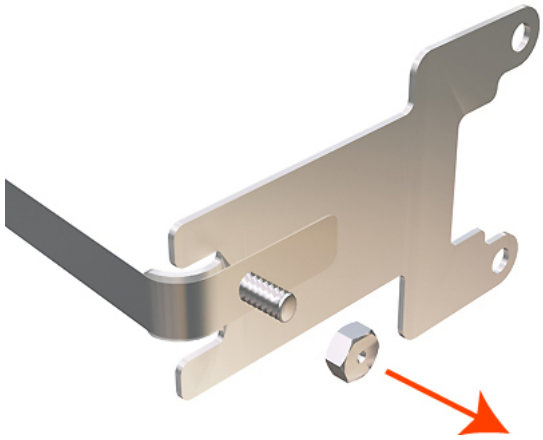

6. Remove the Encoder Strip Spring.

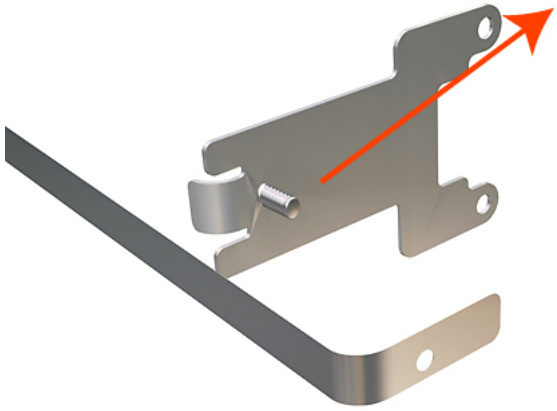

NOTE: When you finish installing or replacing this component, you must perform the necessary Service Calibrations. To find which calibrations you must perform, see Service Calibration Guide to Removal and Installation on page 267.

Encoder Strip, spring and attachment nut

Removal

1. Switch off the product and remove the power cable.
2. Remove the Right Cover on page 463.
3. Remove the Left Cover on page 403.
4. Remove the T-10 screw that secures Encoder Strip to the product.

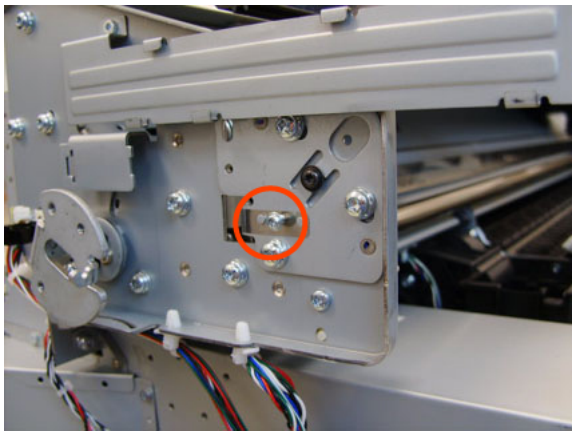

5. Grip the Encoder Strip and move it towards the left to take off the tension until you have completed the next step.

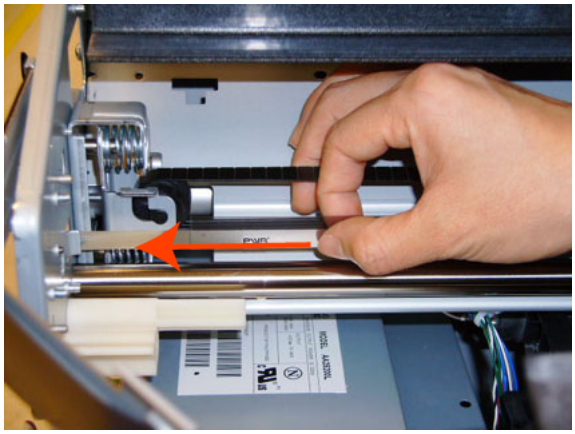

6. Unclip the Encoder Strip from its attachment lugs.

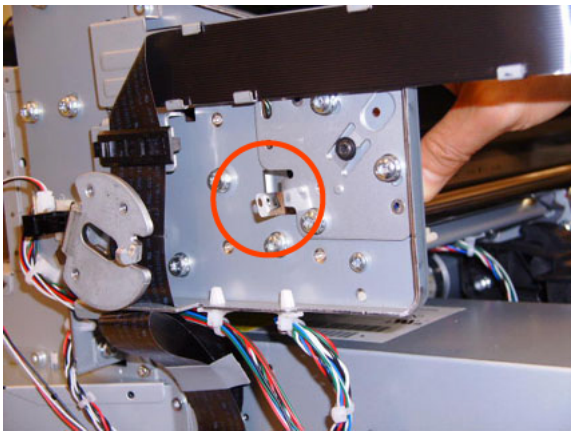

7. Loosen the T-10 uncapping screw sufficiently so you can manually move the Carriage Assembly in the next step.

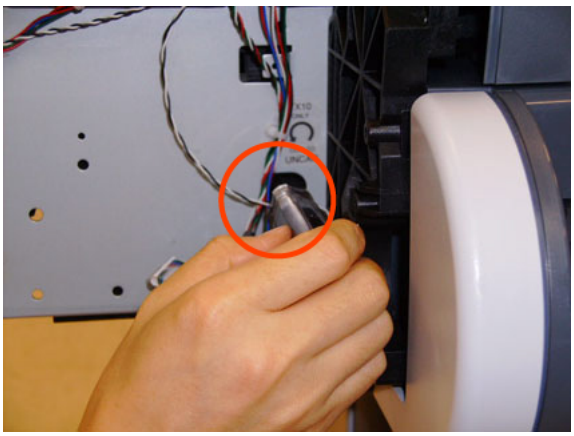

8. Push the Carriage Assembly into the print path.

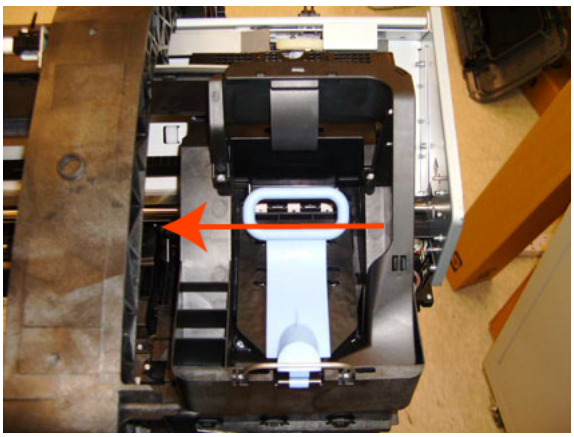

9. Unclip the Encoder Strip tensioner from the right hand end and pull the encoder strip straight out.

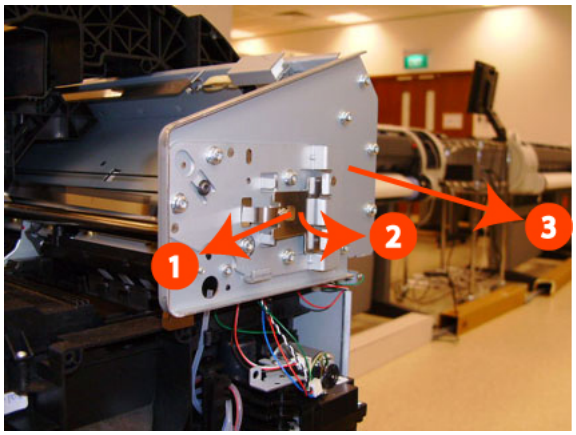

NOTE: When you finish installing or replacing this component, you must perform the necessary Service Calibrations. To find which calibrations you must perform, see Service Calibration Guide to Removal and Installation on page 267.

Formatter

NOTE: For Revision B printers the Formatter and Hard Disk are replaced as a single part,

Removal

1. Turn off the product and remove the power cable.
2. Fully loosen the two locking thumbscrews that secure the Formatter in the product.

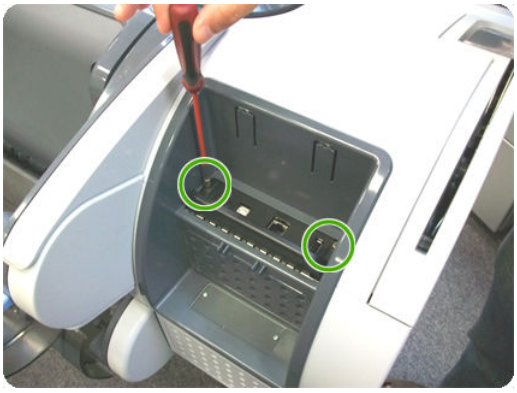

3. Lift the Formatter out of the product.

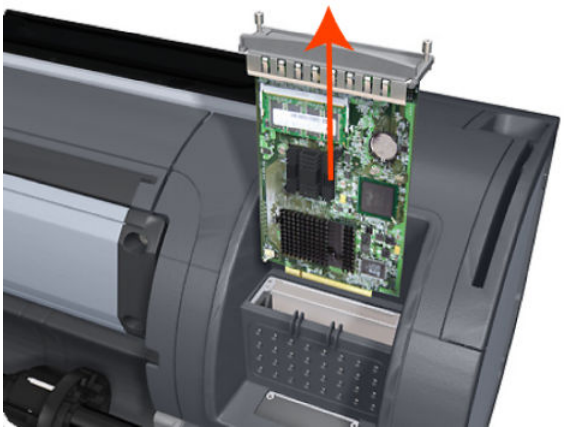

Installation

1. When you install a new Formatter, follow the instructions provided on the flier that accompanies it to set up the product.
2. If you try to install a Hard Disk Drive that was previously used in a different product, the product displays a System Error and will not start successfully. See Hard Disk Drive on page 378.
3. If you are replacing the formatter in a revision B printer, please follow this instructions to reset the ATA password.

How to reset the ATA password

1. Install the jumper in the position shown in the picture (blue jumper shown connected into the correct position).

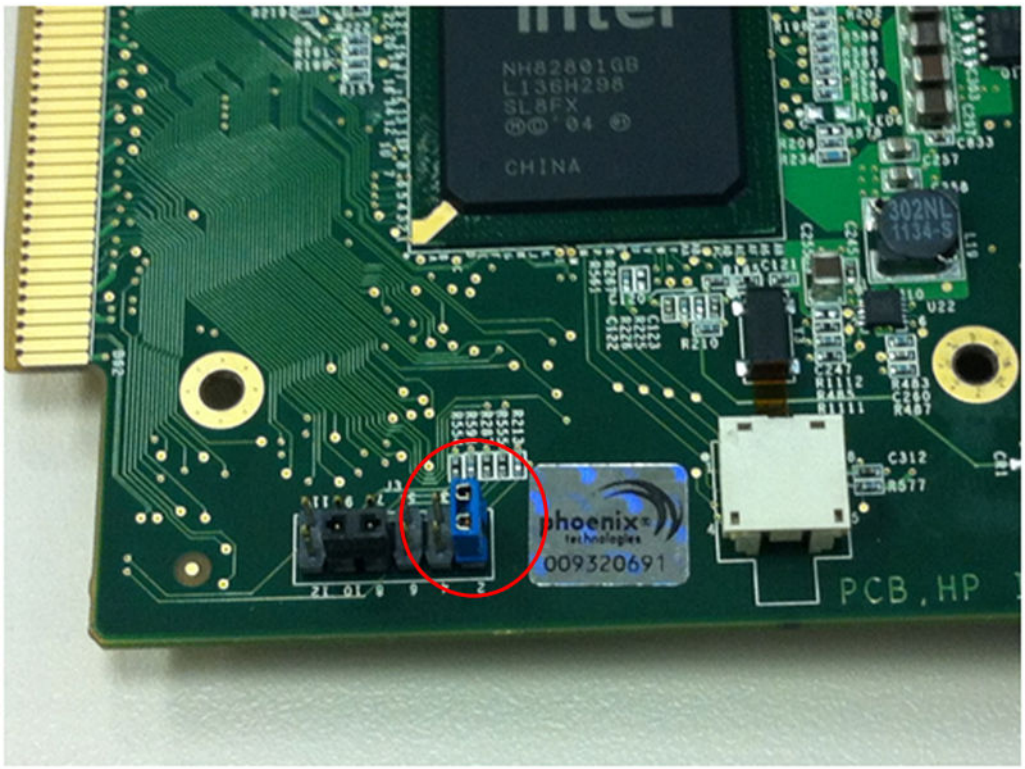

2. Reinsert the formatter and switch the printer on. The password will automatically change.
3. Switch the printer off and remove the formatter. Remove the jumper. Then switch the printer on again.

Freewheel Assembly

These parts can be replaced by customers who have the appropriate flier.

Removal and installation

1. Open the roll cover.

2. Unscrew the freewheel assembly.

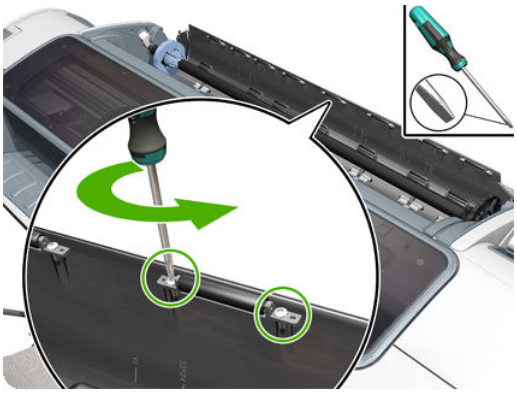

3. Remove the freewheel assembly.

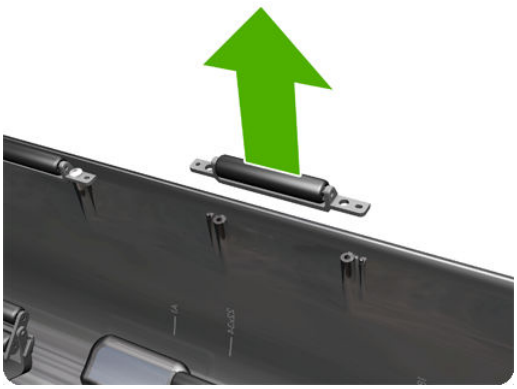

4. Locate the new freewheel assembly and screws.

5. Fit the freewheel assembly to the roll cover.

6. Screw the freewheel assembly to the roll cover.

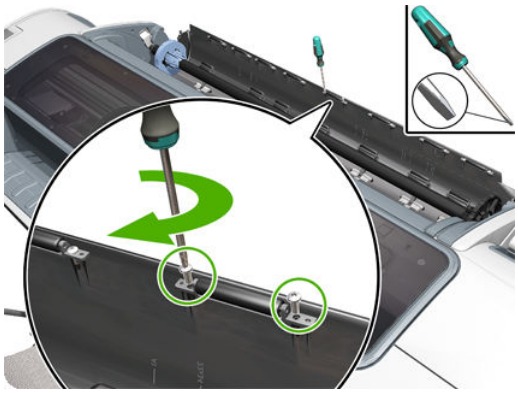

7. Close the roll cover.

Right Front Trim

Removal

1. Switch off the product and remove the power cable.
2. Remove the Front Cover on page 349.
3. Remove the Media Output Assembly on page 430.
4. Remove the three T-20 screws that secure the Right Front Trim to the product.

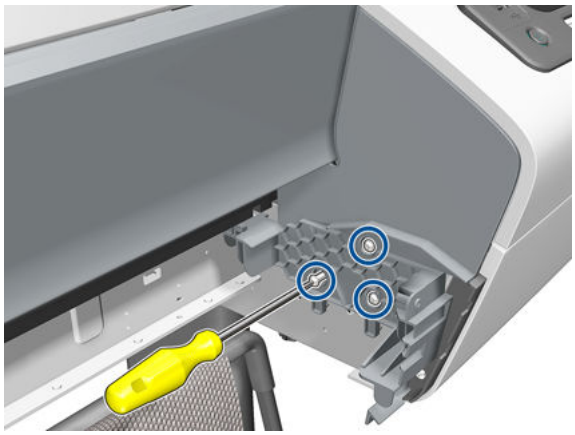

5. Unclip the Right Front Trim and pull it away from the printer.

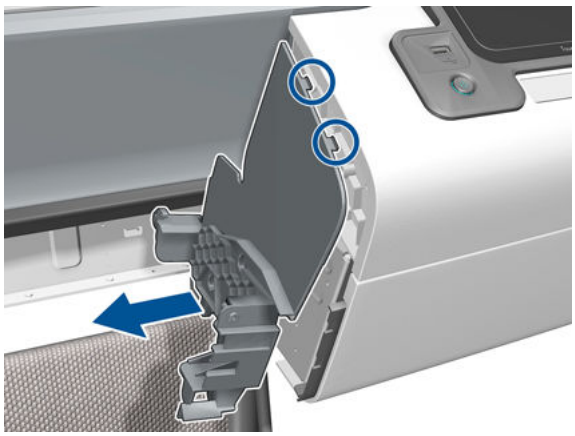

6. Remove Right Front Trim from the product.

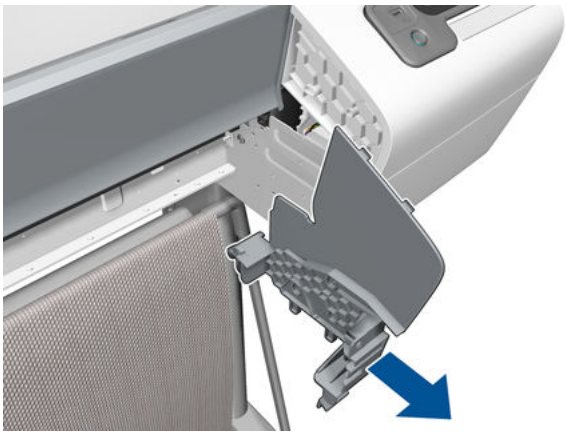

Full Bleed Foam

Removal

The complete Full Bleed Foam is constructed of three separate sections, left, center and right. This procedure describes how to remove the left section only. Removal of the other two sections is done in the same way.

1. Switch off the product and remove the power cable.
2. Open the Scanner (MFP only) or Window.

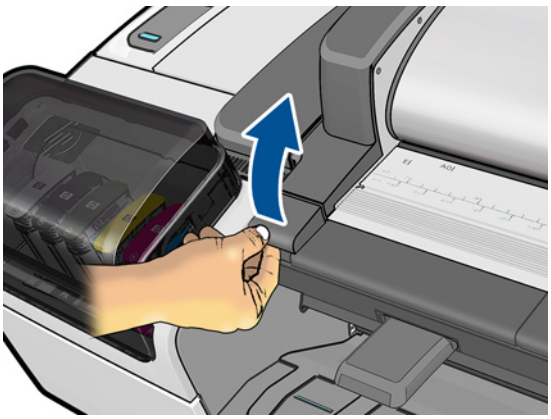

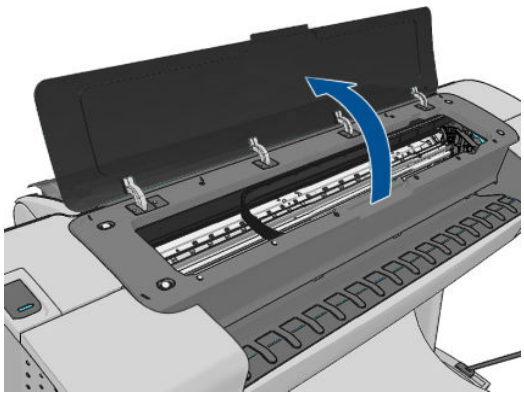

3. Remove the Left Full Bleed Foam from the left platen, and remove the Platen Middle Foams that are exposed once the Full Bleed Foam has been removed.

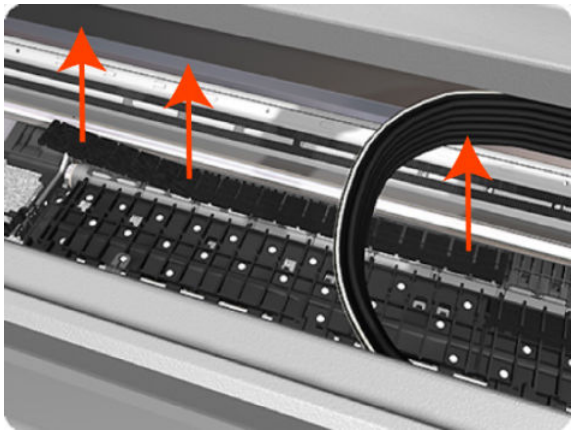

NOTE: When you reinstall the full bleed foams, take care to correctly seat them to avoid possible damage to the Carriage Assembly

Hard Disk Drive

NOTE: For Revision B printers the Formatter and Hard Disk are replaced as a single part,

Removal and installation

1. Remove the Formatter on page 370.
2. Unscrew four screws in the formatter.

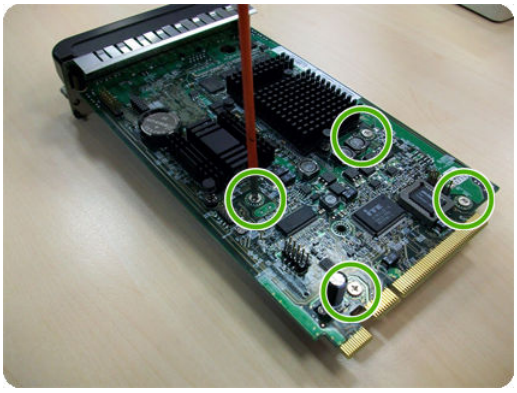

3. Remove the hard disk drive from the formatter by applying force in the direction of the arrow.

4. Insert a new hard disk drive.

NOTE: If you try to insert a previously used hard disk drive, the product displays a System Error and will not start successfully.

5. Replace all screws that you removed earlier.

Left Ink Cartridge Door

Removal

1. Switch off the product and remove the power cable.
2. Open the Left Ink Cartridge Door.

3. Unclip the left side of the Left Ink Cartridge Door.

4. Unclip the right side of the Left Ink Cartridge Door.

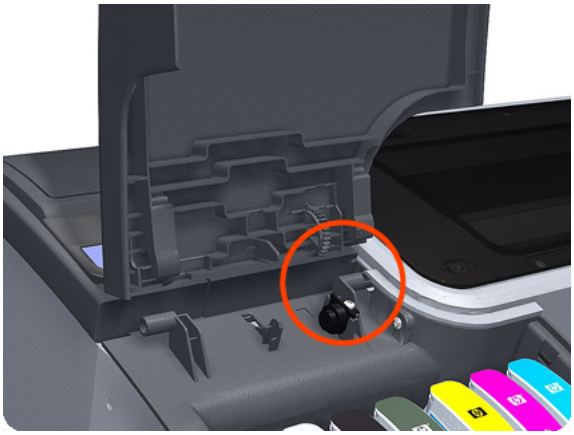

5. Remove the Left Ink Cartridge Door.

Right Ink Cartridge Door

Removal

1. Switch off the product and remove the power cable.
2. Open the Right Ink Cartridge Door by inserting a screwdriver into the side to unlatch it, and then lift up the door.

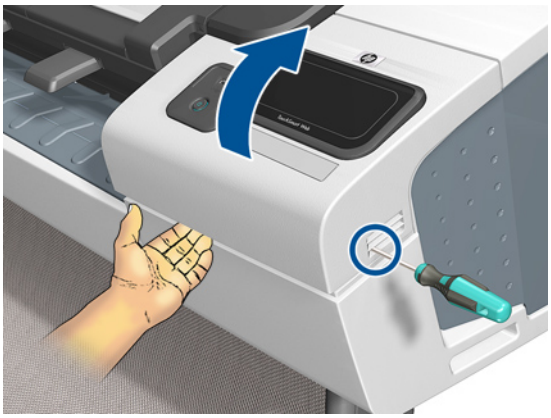

3. Remove one T-15 screw from the right ink door.

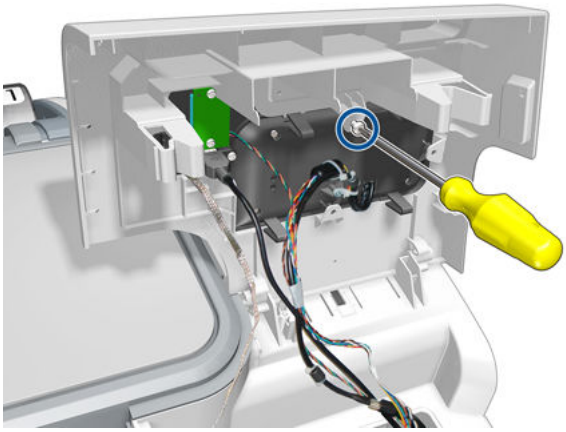

4. Pass the Touch Control Panel through the window of the ink door and place it on the features as shown in the picture.

5. Slide up the Right Ink Cartridge Door to remove.

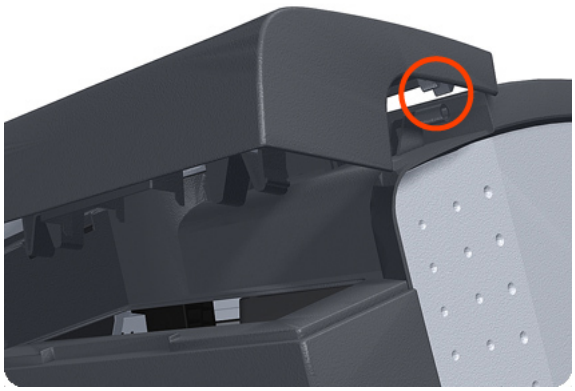

6. Remove the Right Ink Cartridge Door.

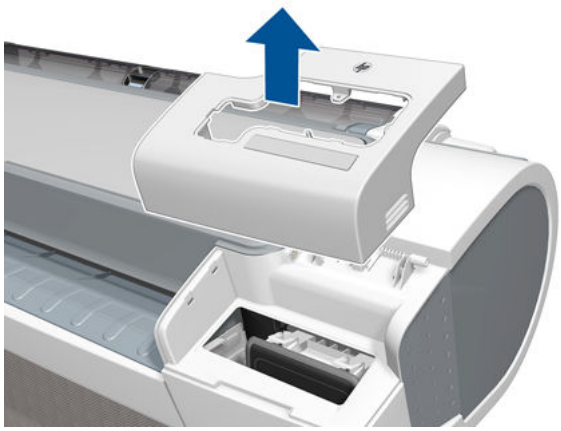

Left Ink Supply Station

Removal

1. Switch off the product and remove the power cable.
2. Remove the Left Cover on page 403.
3. Remove two T-10 screws that secure the Left Side Plate of the Left Ink Supply Station.

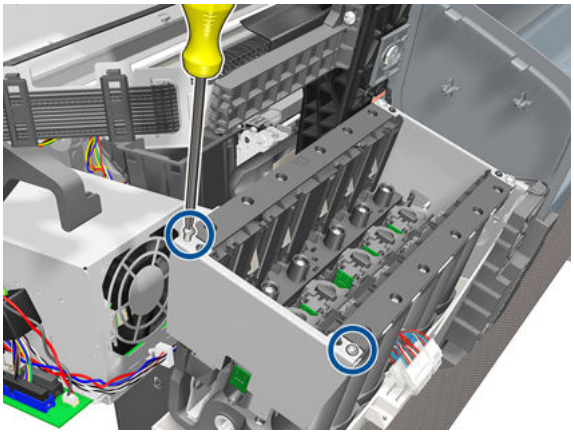

4. Remove the Left Side Plates of the Left Ink Supply Station.

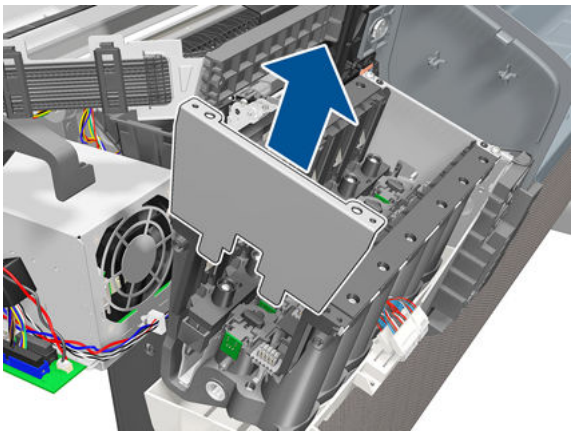

5. Remove two T-10 screws that secure the Right Side Plate of the Left Ink Supply Station.

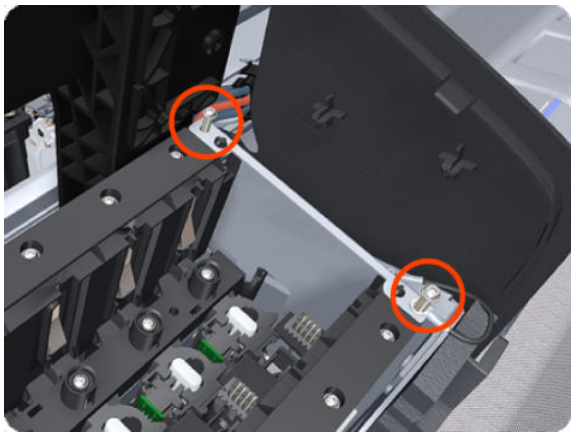

6. Remove the two Left Ink Supply Station bonding cables.

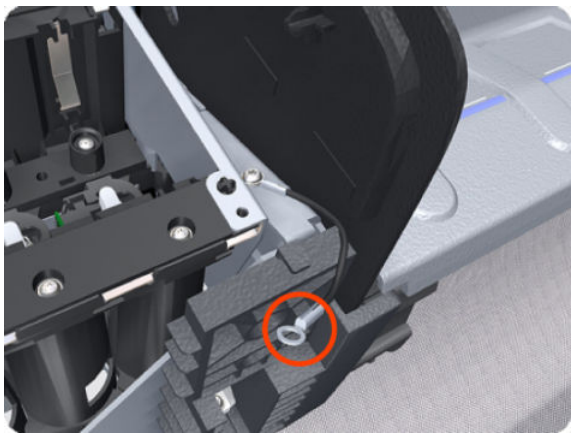

7. Remove the Right Side Plate of the Left Ink Supply Station.

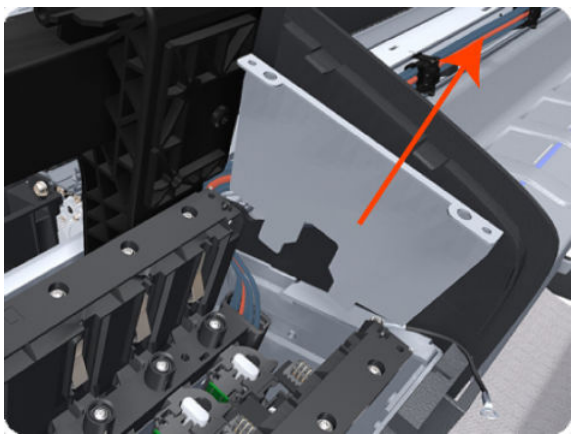

8. Remove the T-20 screw that secures the Left Ink Supply Station to the product.

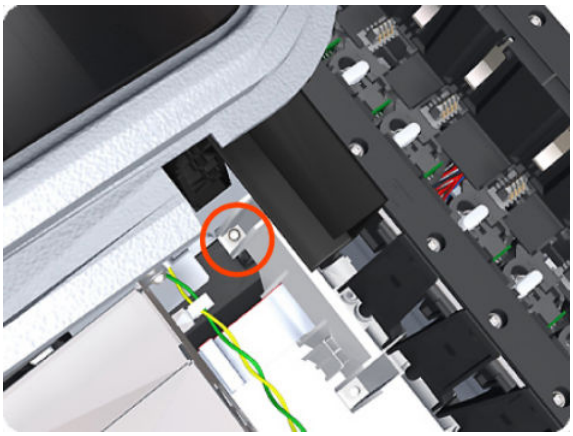

9. Remove the two T-20 screws that secure the Left Ink Supply Station to the product.

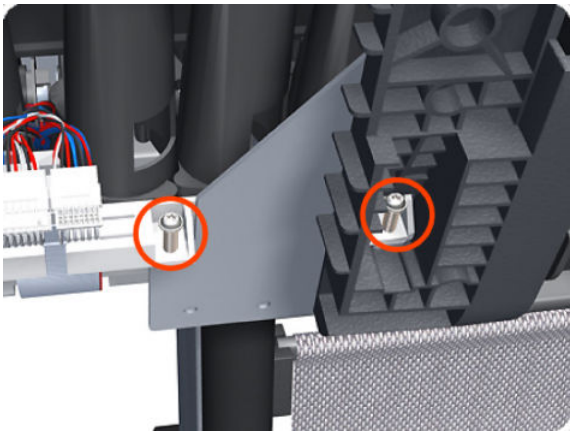

10. Disconnect the four connectors from the Left Ink Supply Station.

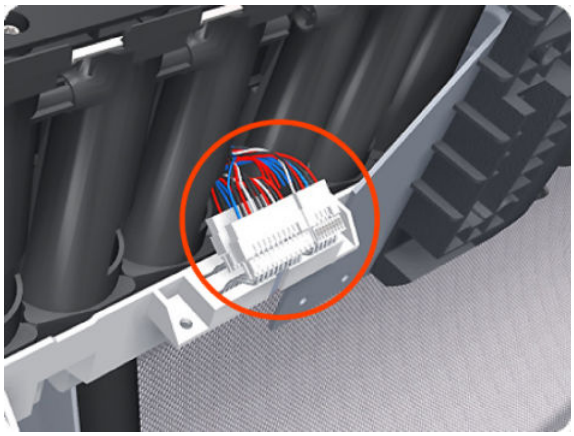

NOTE: If you need to change the ISS Harness Cable, make sure you keep the previously used plastic connector. The new cable will arrive with a female end, which you will replace with the existing male end.

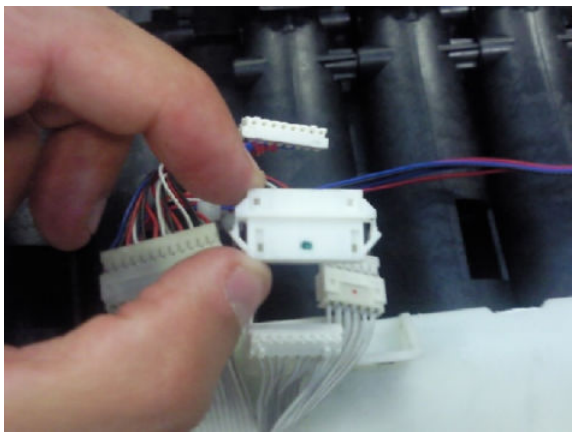

11. Unroute the four cables from the Left Ink Supply Station.

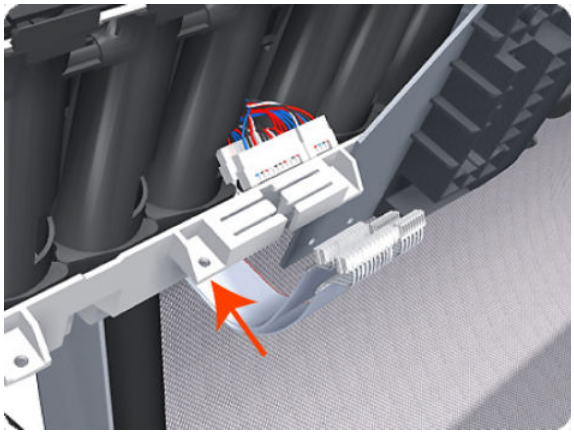

12. Carefully lift the Cartridge Tubes Connector out of the Left Ink Supply Station.

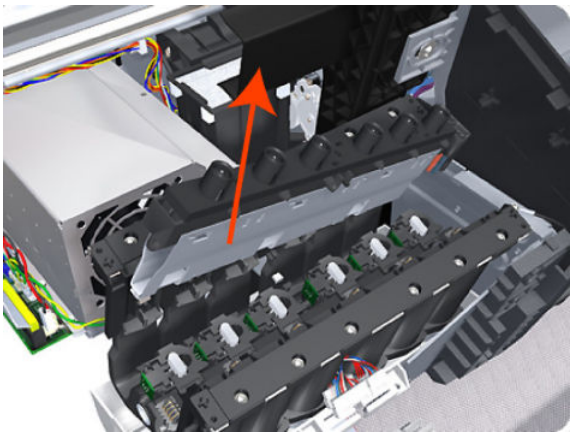

13. Carefully lift the Left Ink Supply Station enough so that you can rotate it counterclockwise to release the front attachment from the product.

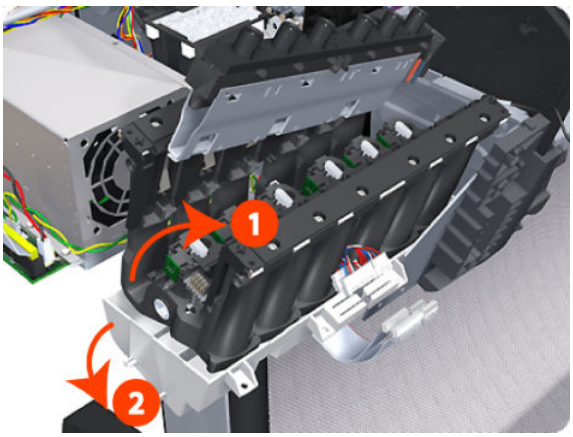

14. Carefully lift the Left Ink Supply Station completely out of the product.

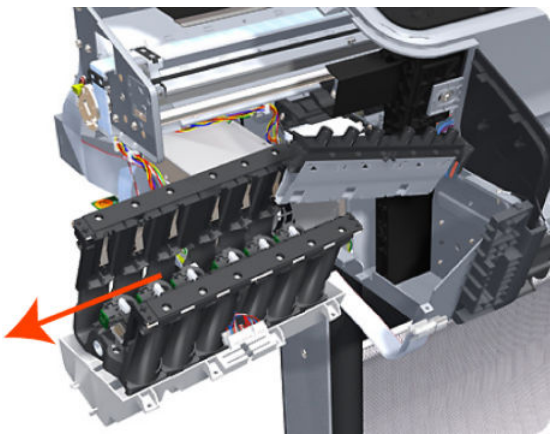

NOTE: When you finish installing or replacing this component, you must perform the necessary Service Calibrations. To find which calibrations you must perform, see Service Calibration Guide to Removal and Installation on page 267.

Ink Supply Tubes & Trailing Cable

Removal

1. Switch off the product and remove the power cable.
2. Remove the Right Cover on page 463.
3. Remove the Left Cover on page 403.
4. Remove the Touch Control Panel on page 533.
5. Remove the Front Cover on page 349
6. Remove the Front Top Cover Assembly (MFP only) on page 350
7. Uncap the Service Station.
8. Open the Carriage Cover.

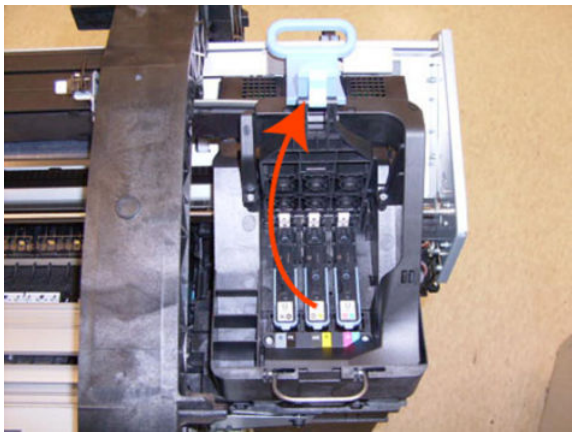

9. Remove all the Printheads.

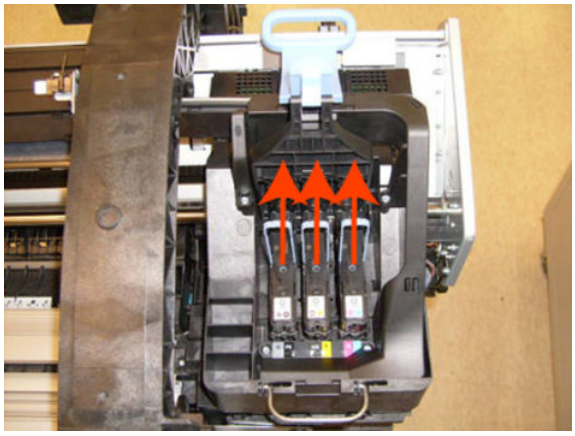

10. Remove one T-10 screw from the small cover.

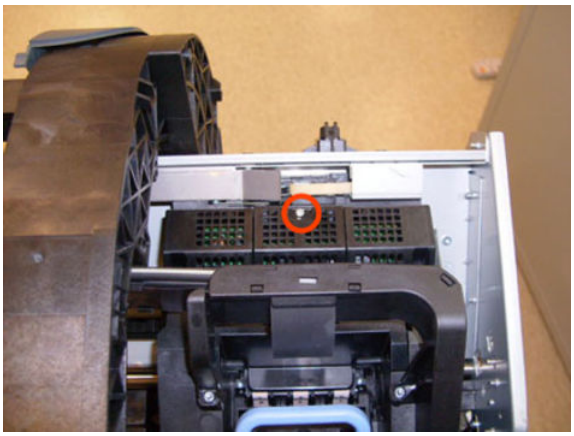

11. Remove the small cover of the Carriage PCA.

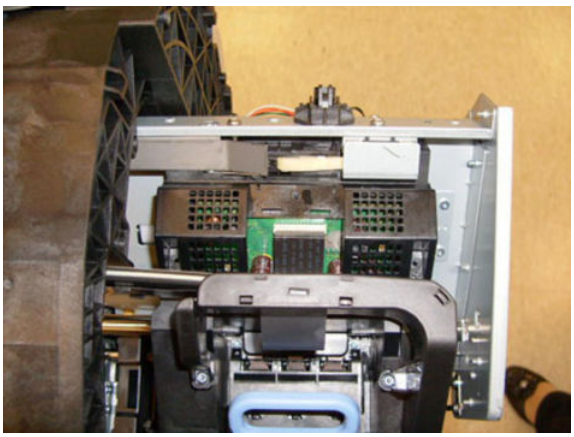

12. Disconnect the ribbon Trailing Cable from the Carriage PCA.

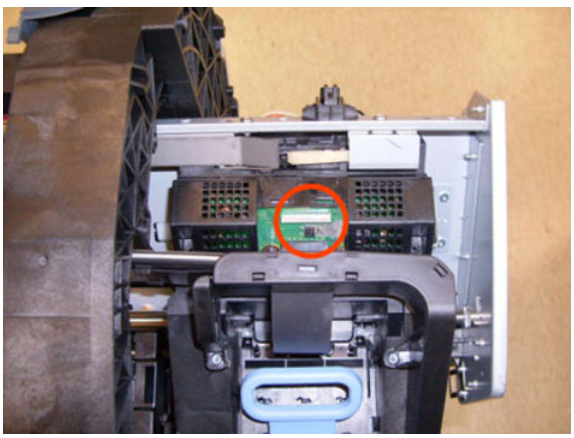

13. Remove the four T-15 screws that secure the Ink Supply Tubes to the Carriage Assembly.

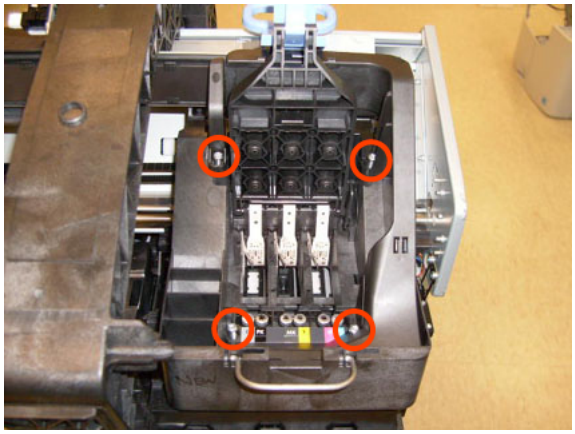

14. Carefully lift out the Ink Supply Tubes and close the carriage cover at the same time.

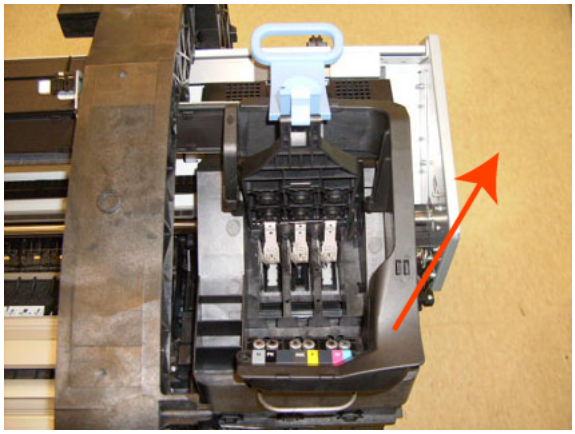

15. Close and lock the Carriage Cover.

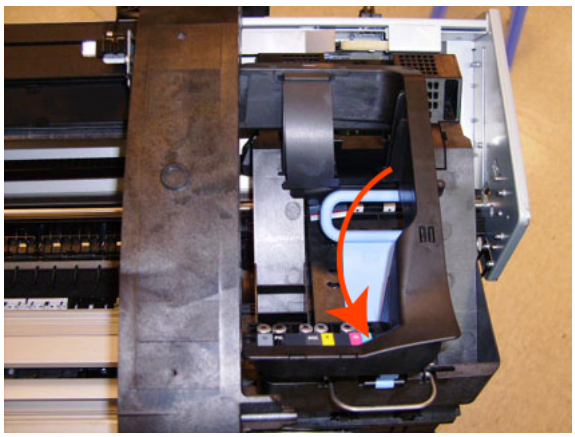

16. Carefully move the Ink Supply Tubes into the print path.

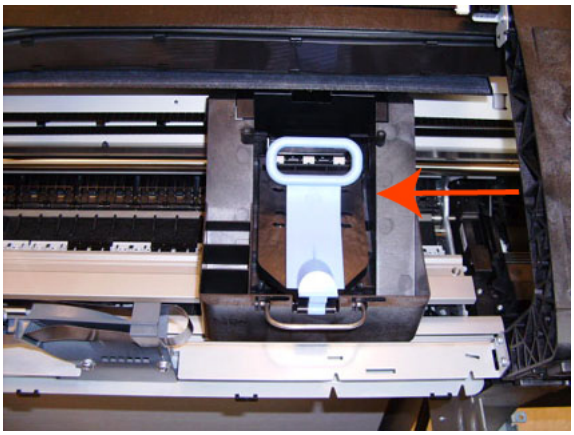

17. Place the Ink Supply tubes on top of the product as shown here.

18. Remove the Trailing Cable from the Main Engine PCA.

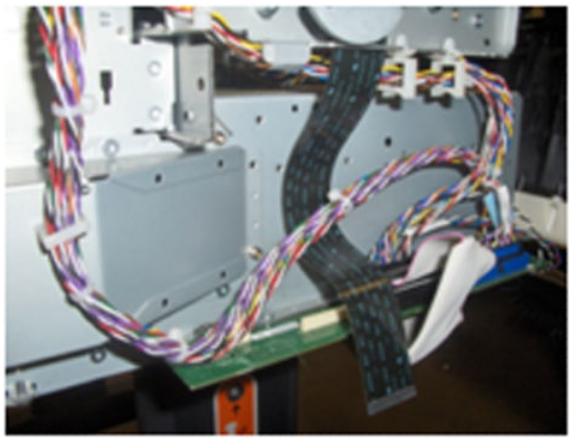

19. Remove five clips from the Trailing Cable Left guide.

20. Leave the Trailing Cable as shown .

21. There are two different Left Brackets, but the procedure is the same for both.

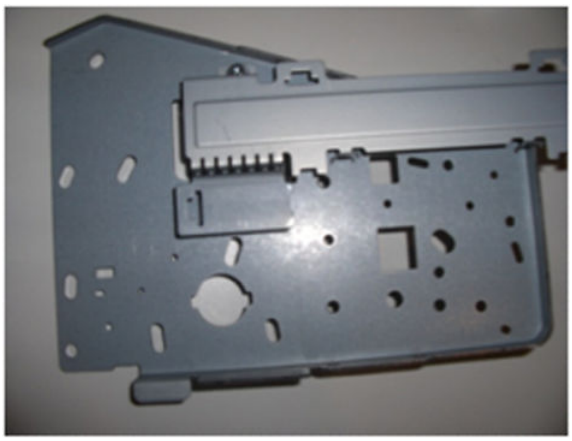

22. Remove all the Front Tube Guide clips.

23. Remove the top T-15 screw that secures Ink Supply Tubes guide to the product.

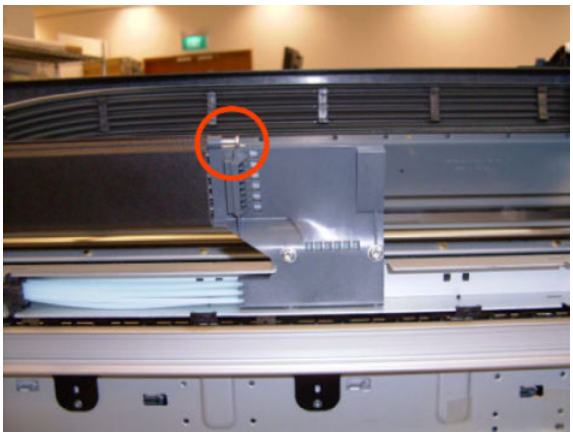

24. Remove the two front T-20 screws that secure Ink Supply Tubes guide to the product.

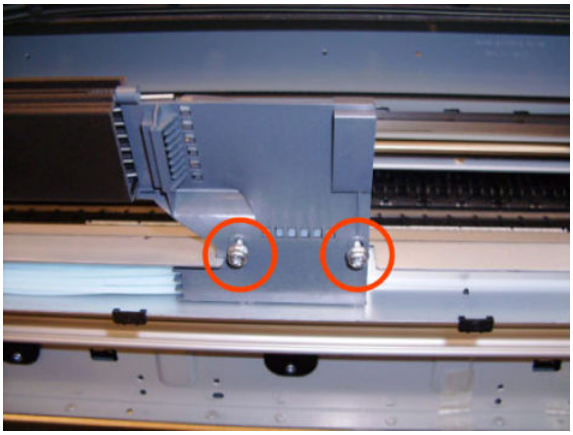

25. Carefully lift the Ink Supply Tubes guide enough until you can slide it forwards out of the product.

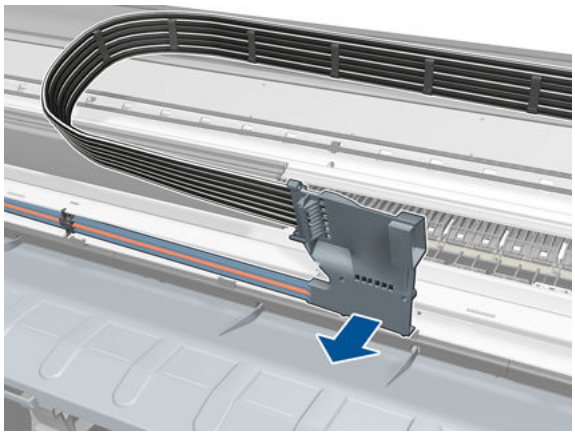

26. Use a flat bladed screw driver to release all the Ink Supply Tube clamps from the product.

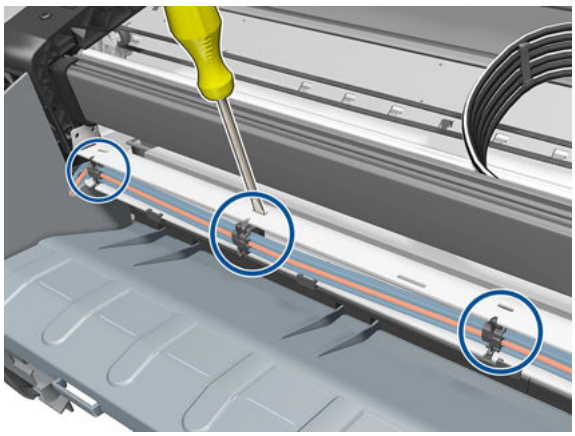

27. Remove two T-10 screws that secure the Left Side Plate of the Left Ink Supply Station.

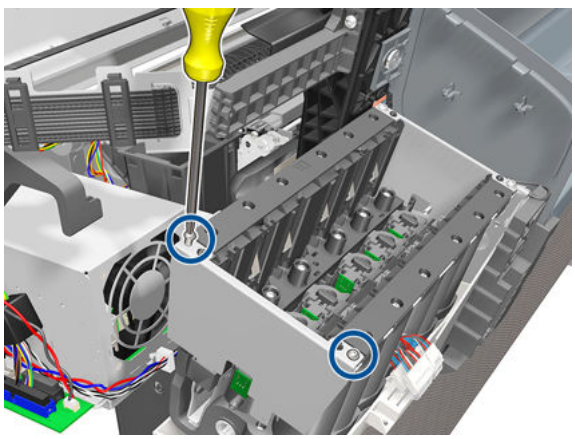

28. Remove the Left Side Plates of the Left Ink Supply Station.

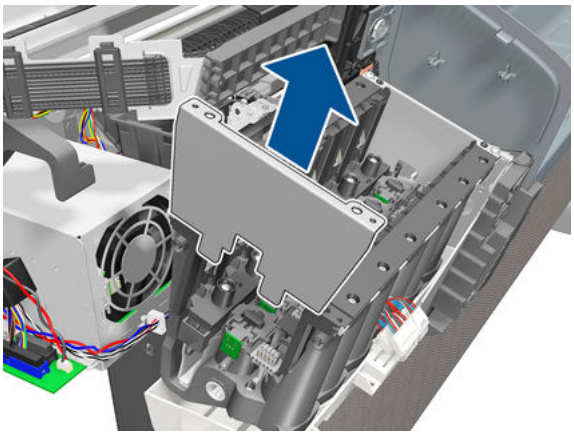

29. Remove two T-10 screws that secure the Right Side Plate of the Left Ink Supply Station.

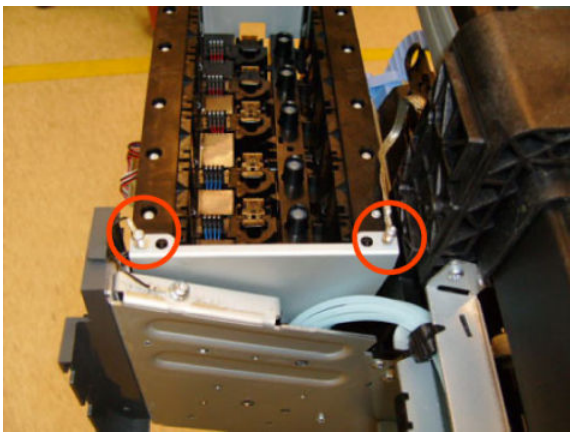

30. Remove the Left Ink Supply Station bonding cable.

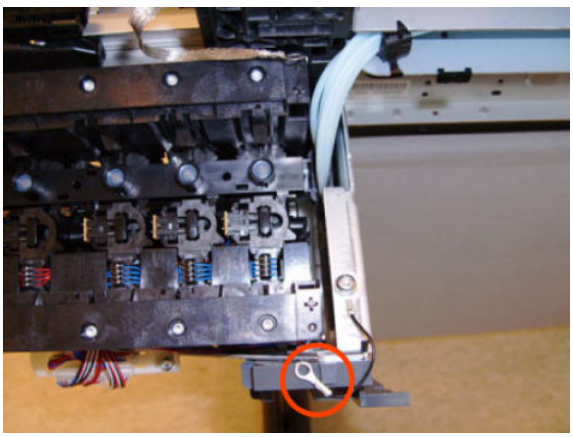

31. Remove the Right Side Plate of the Left Ink Supply Station.

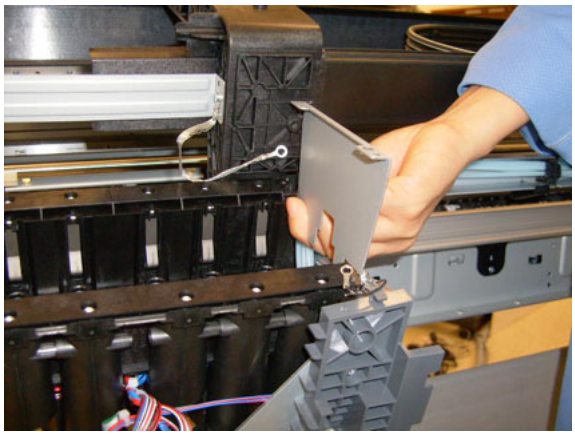

32. Carefully remove the Ink Supply Tubes from the assembly.

NOTE: When you finish installing or replacing this component, you must perform the necessary Service Calibrations. To find which calibrations you must perform, see Service Calibration Guide to Removal and Installation on page 267.

When installing the Trailing Cable into the Product, use your finger to create a bend in the cable, there should be sufficient to avoid creasing the cable.

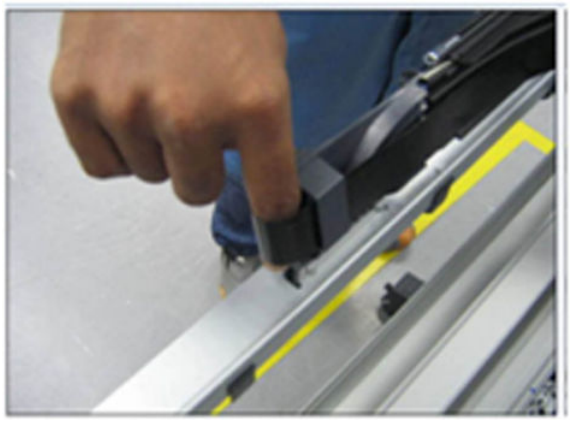

Ink Supply Tubes Support Rail

Removal

1. Switch off the product and remove the power cable.
2. Remove the Right Cover on page 463.
3. Remove the Left Cover on page 403.
4. Remove the Touch Control Panel on page 533.
5. Remove the Rear Cover on page 460.
6. Remove the Rear Cover (MFP only) on page 457.
7. Remove the Front Top Cover on page 352.
8. Remove the Front Top Cover Assembly (MFP only) on page 350.
9. Remove two T-15 screws that secure the Ink Supply Tubes Support Rail to the right Top Cover Support.

10. Carefully slide the Ink Supply Tubes Support Rail to the left until the right end is clear of the right Top Cover Support.

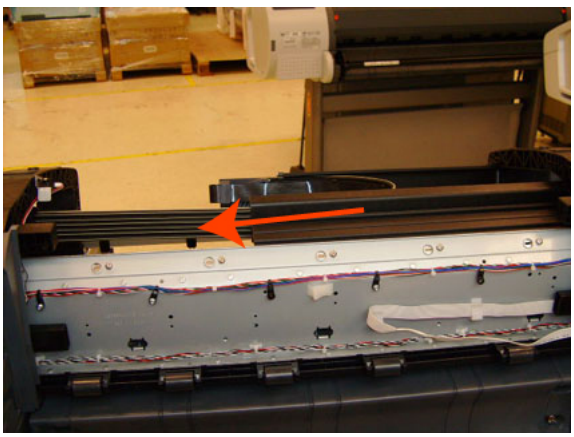

11. Remove the Ink Supply Tubes Support Rail from the product.

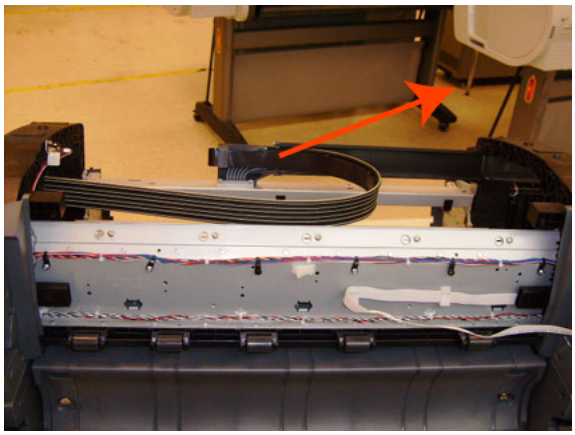

NOTE: When you finish installing or replacing this component, you must perform the necessary Service Calibrations. To find which calibrations you must perform, see Service Calibration Guide to Removal and Installation on page 267.

Interconnect PCA

Removal

1. Switch off the product and remove the power cable.
2. Remove the Right Cover on page 463.
3. Disconnect the eight cables indicated from the Interconnect PCA.

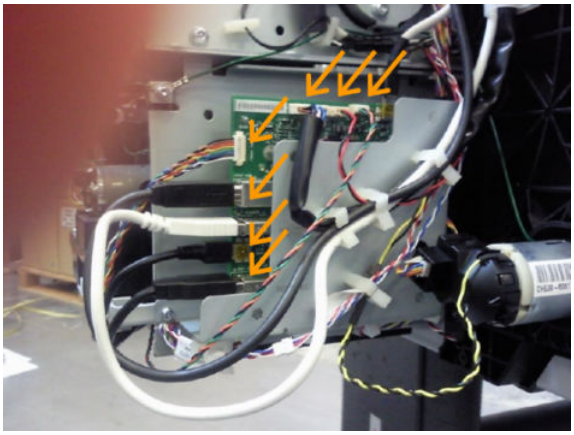

4. Remove the cable from the cable clamps indicated here.

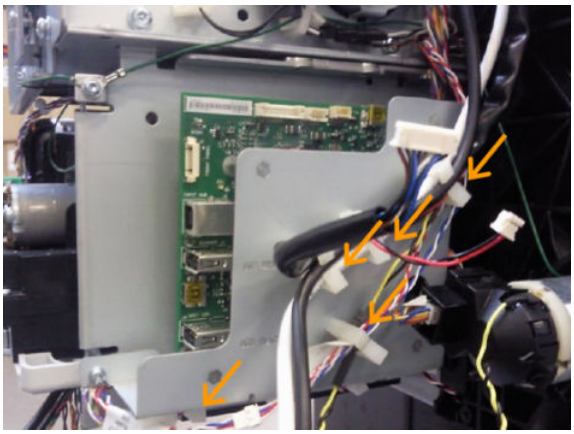

5. Loosen (do not remove completely) the two screws that secure the metal plate to the bottom-left and top-right corners.

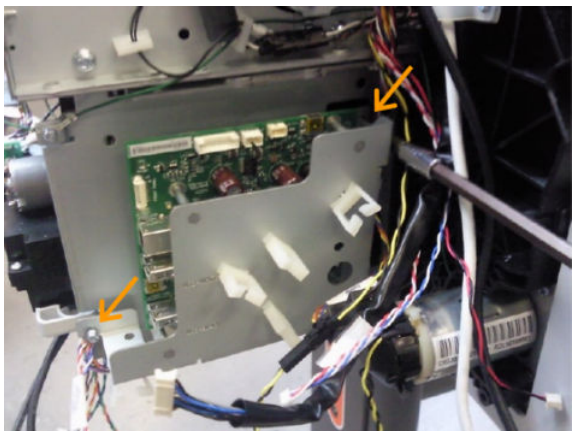

6. Remove the screw that secures the metal plate to the bottom right corner.

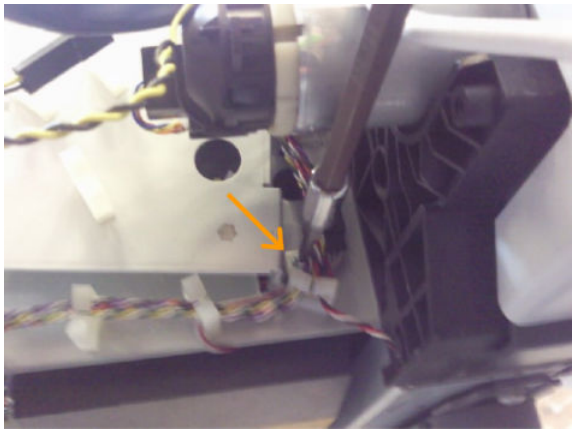

7. Remove the four screws that secure the Interconnect PCA with the metal plate

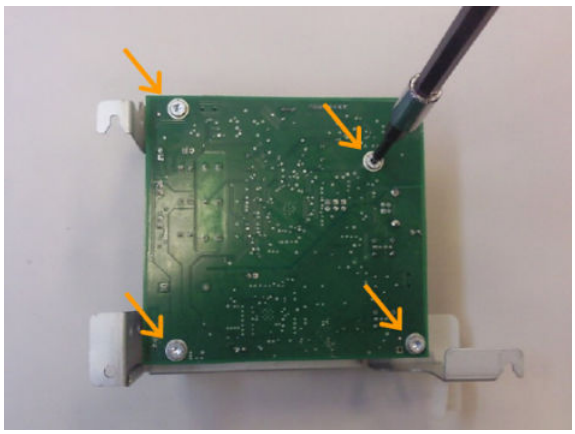

Left Collar Cover (MFP only)

1. Remove Left Cover on page 403
2. Remove two T-15 screws that secure the Left Collar Cover to the product.

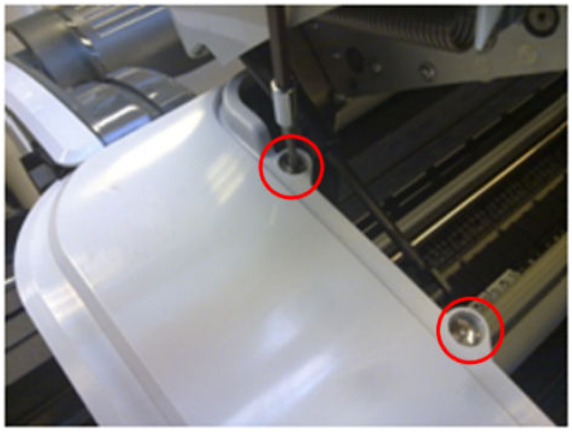

Left Cover

Removal

1. Switch off the product and remove the power cable.
2. Remove the Front Cover on page 349.
3. Remove the Converger on page 334.
4. Remove the Left Panel on page 435.
5. Unclip the spring from the attachment points on the Media Lever and Left Cover.Cover).

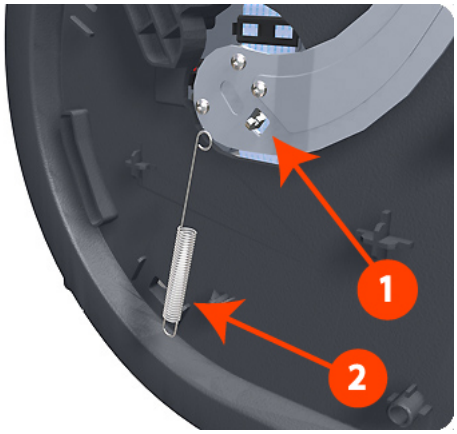

6. Remove three T-20 screws that secure the Media Lever.

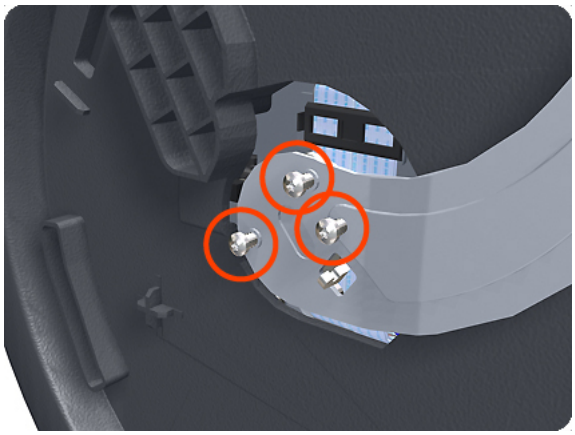

7. Use a flat-bladed screwdriver to unclip the two attachment clips of the Formatter Housing.

8. Lift the Formatter Housing out of the product.

9. Remove one T-15 screw that secures the Left Cover (top rear, accessible under the Formatter Housing).

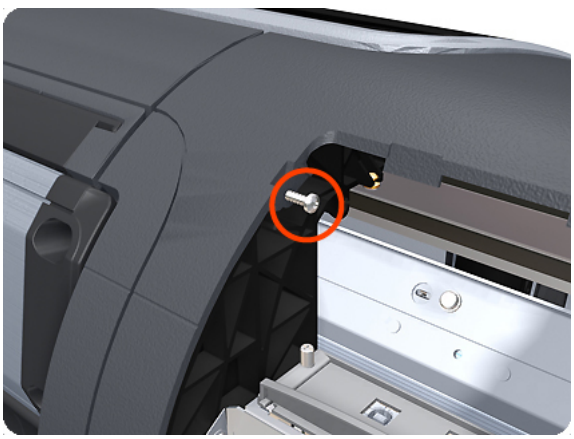

10. Remove one T-15 screw that secures the Left Cover (bottom rear).

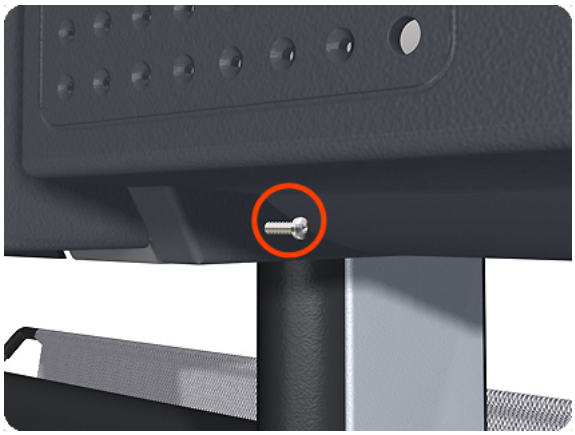

11. Remove one T-15 screw that secures the Left Cover (bottom rear).

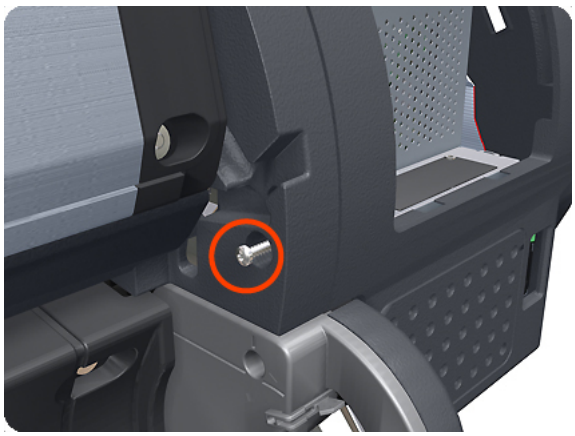

12. Remove one T-15 screw that secures the Left Cover (bottom front, accessible under Front Cover).

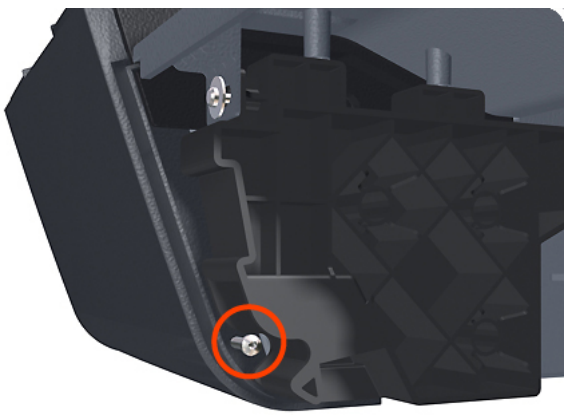

13. Remove one T-15 screw that secures the Left Cover (top front, accessible Ink Cartridge Door).

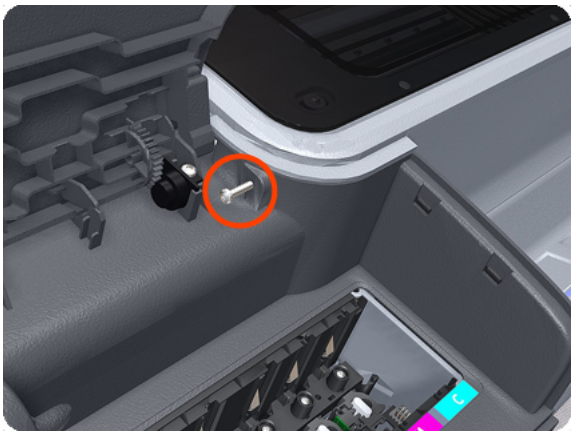

14. Unclip the Left Trim.

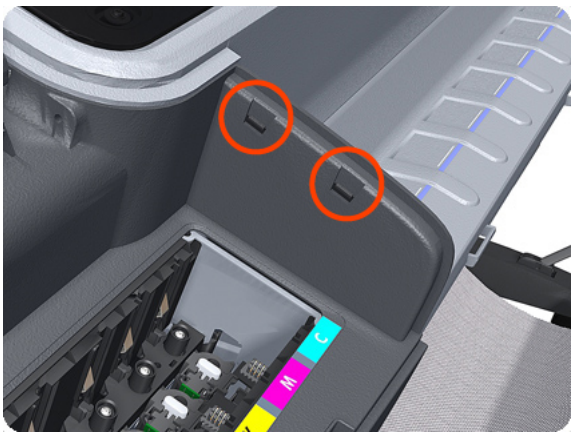

15. Remove the Left Cover from the product.

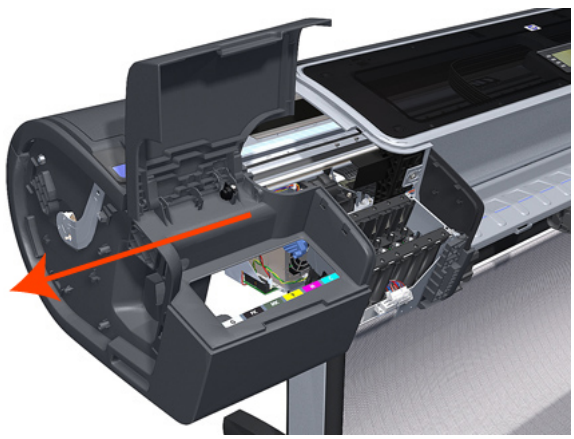

Left Front Trim

Removal

1. Switch off the product and remove the power cable.
2. Remove the Front Cover on page 349.
3. Remove the Media Output Assembly on page 430.
4. Remove three T-20 screws that secure the Left Front Trim to the product.

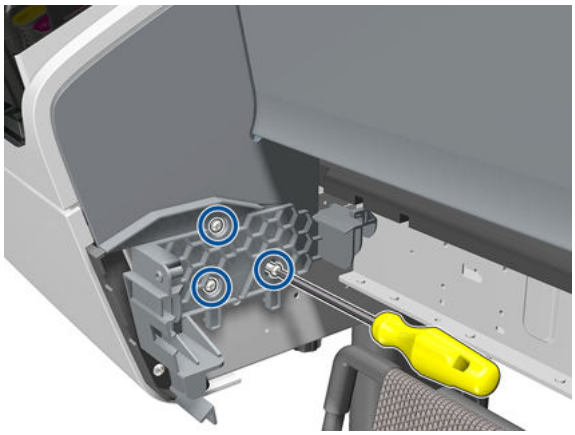

5. Unclip the Left Front Trim and pull it away from the printer.

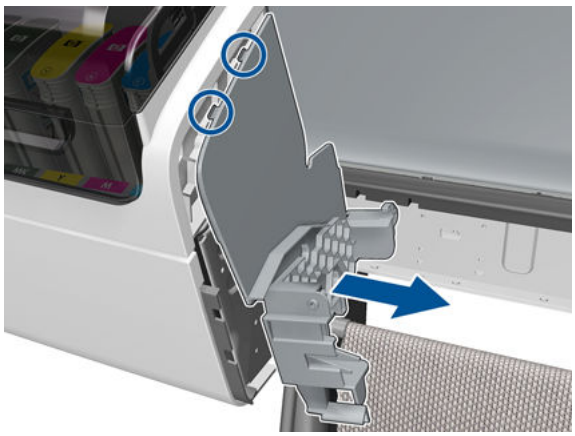

6. Remove Left Front Trim from the product.

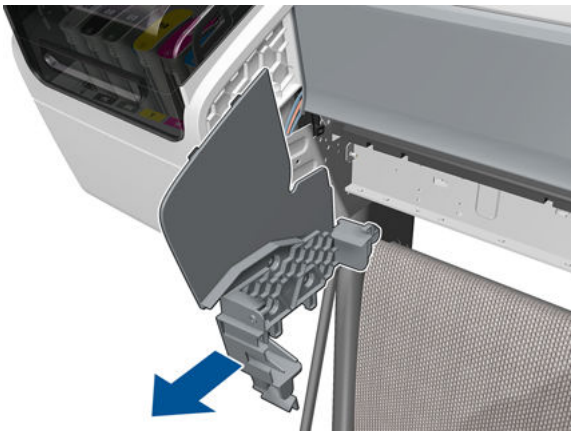

Left Scanner Cover (MFP only)

Removal

1. Switch off the product and remove the power cable.
2. Remove one T–10 screw that secure the front of the Left Scanner Cover.

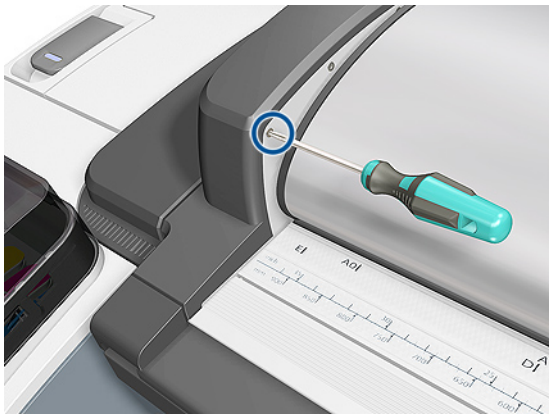

3. Unlatch the CIS Cover.

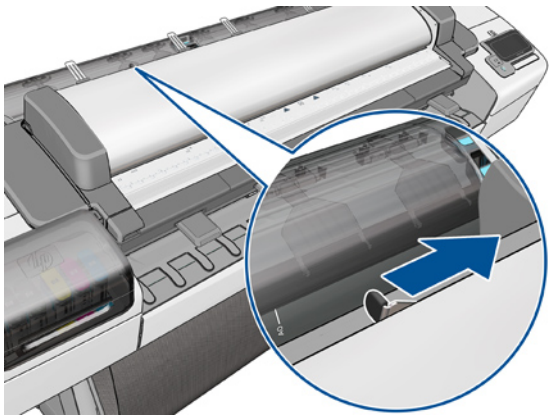

4. Open the CIS.

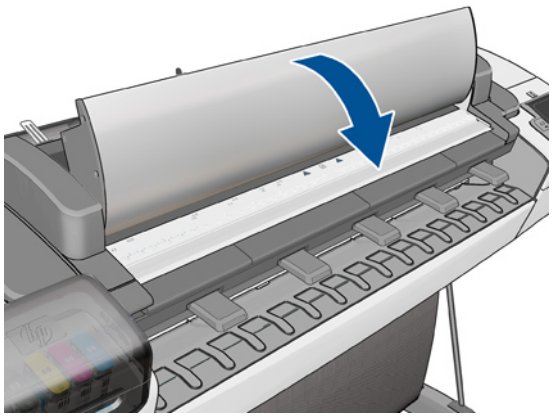

5. Remove three T-10 screws that secure the Left Scanner Cover.

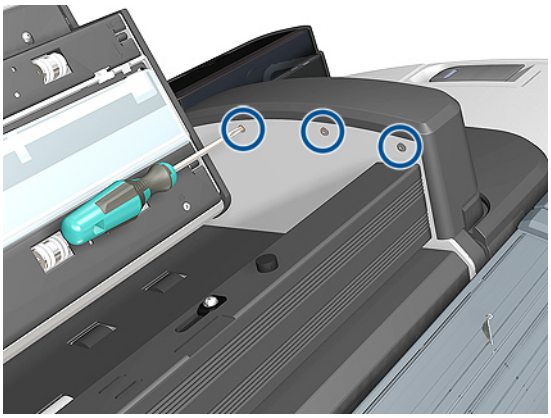

6. Open the latch of the Scanner.

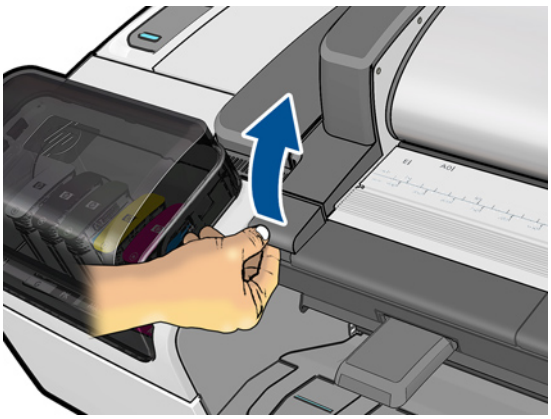

7. Remove two Left Scanner Cover.

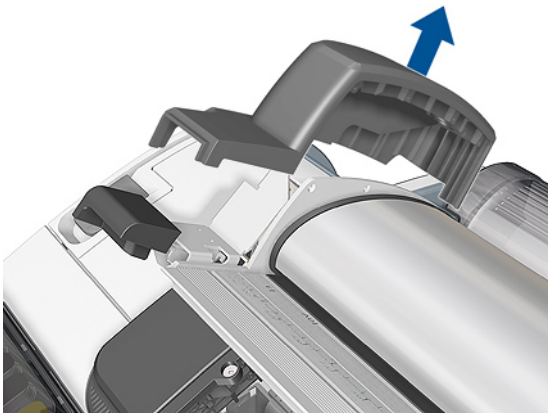

Scanner Latch and Hook Assembly (MFP only)

Removal

1. Remove the Left Scanner Cover (MFP only) on page 409.
2. Remove one T-20 screw and two T-15 screws.

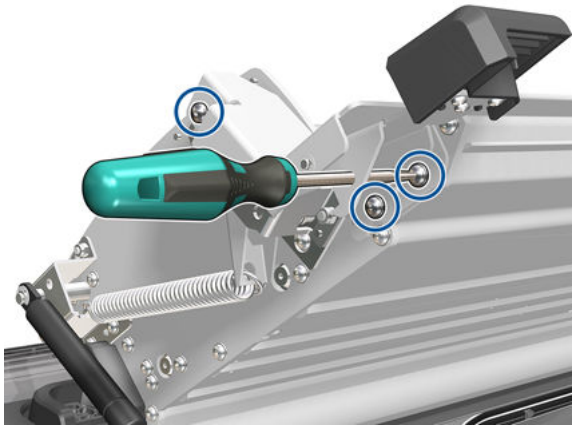

3. Remove the Latch Assembly.

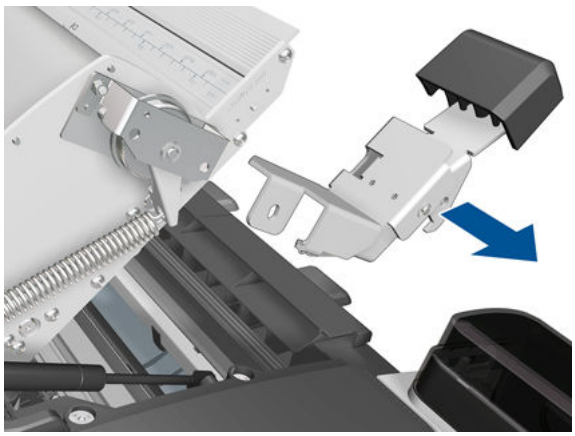

4. Remove one T-15 screw .

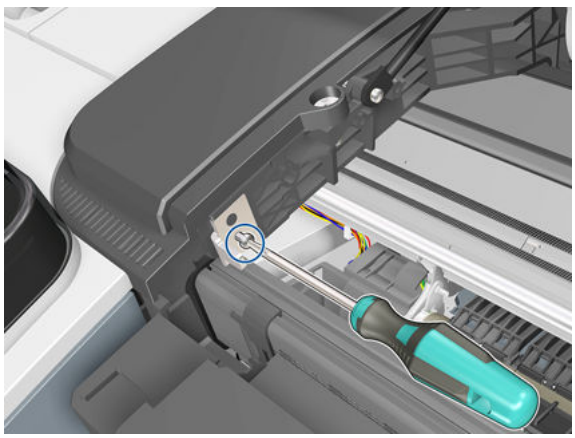

5. Remove the Latch Hook.

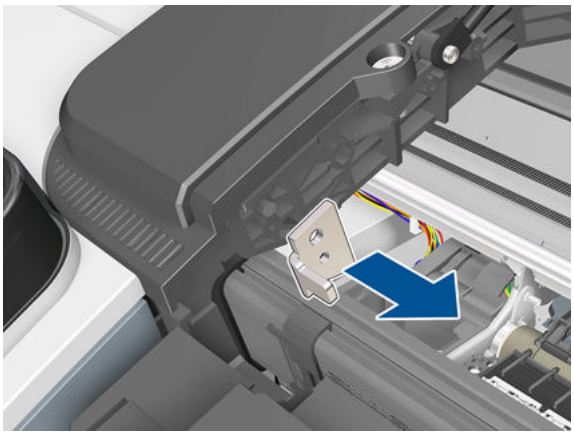

Installation

▲ When assembling back the new Latch make sure it fits into the reference pins.

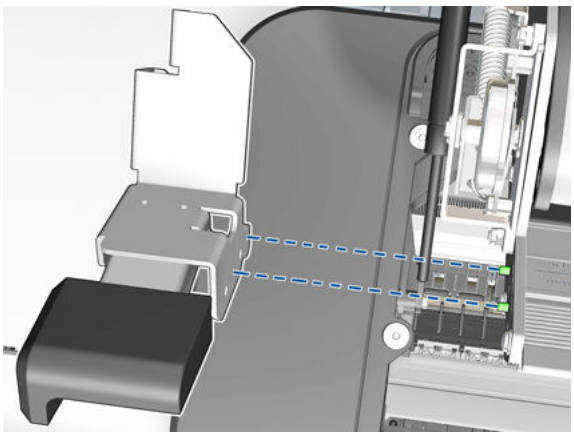

Line Sensor

Removal

1. Switch off the product and remove the power cable.
2. Remove the Right Cover on page 463.
3. Remove the Left Cover on page 403.
4. Remove the Touch Control Panel on page 533.
5. Remove the Front Top Cover on page 352
6. Remove the Front Top Cover Assembly (MFP only) on page 350
7. Remove the Scanner Position Sensor (MFP only) on page 516.
8. Open the Carriage Cover.

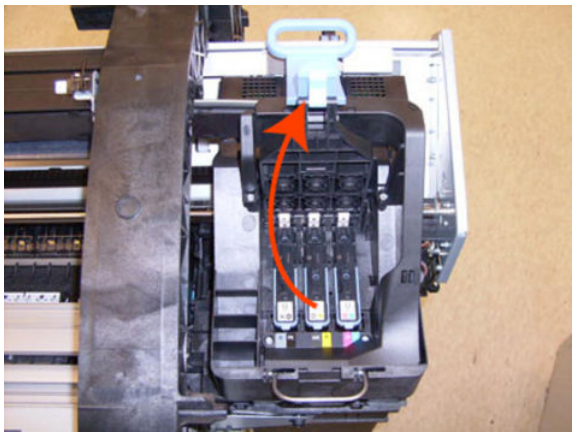

9. Remove all the Printheads.

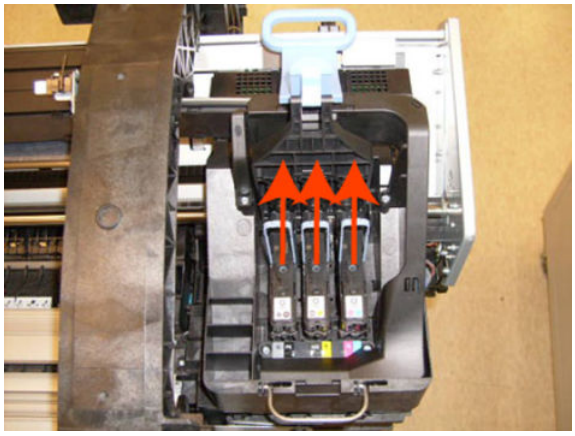

10. Remove one T-10 screw from the small cover.

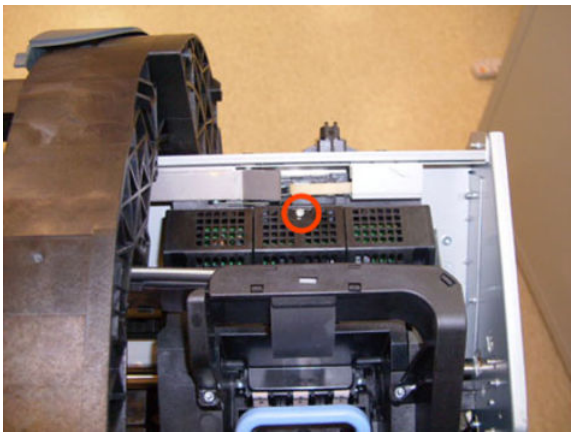

11. Remove the small cover of the Carriage PCA.

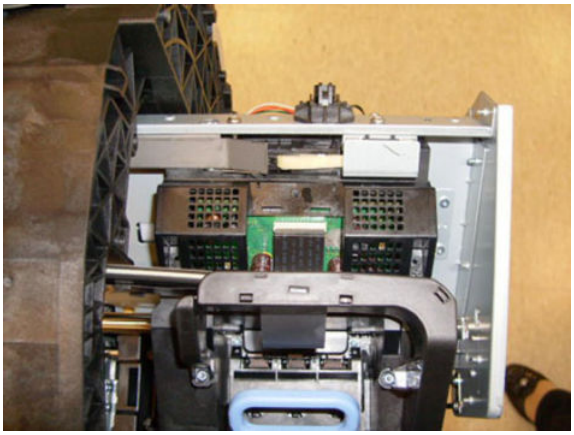

12. Disconnect the ribbon cable of the Trailing Cables from the Carriage PCA.

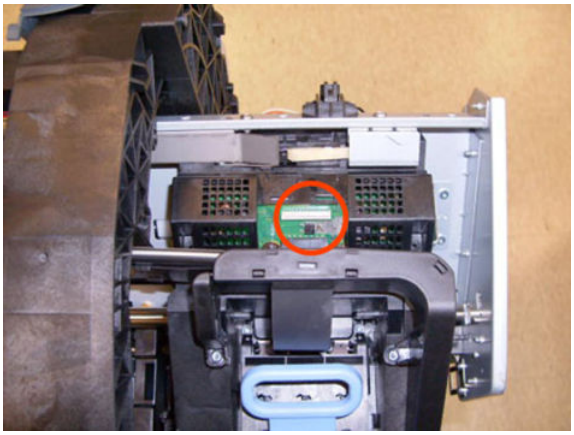

13. Remove the four T-15 screws that secure the Ink Supply Tubes to the Carriage Assembly.

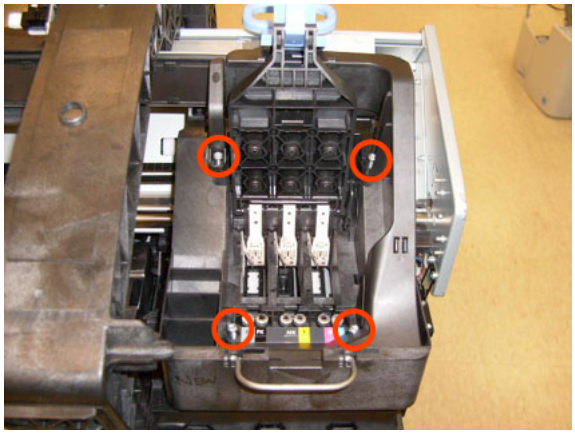

14. Carefully lift out the Ink Supply Tubes and close the carriage cover at the same time.

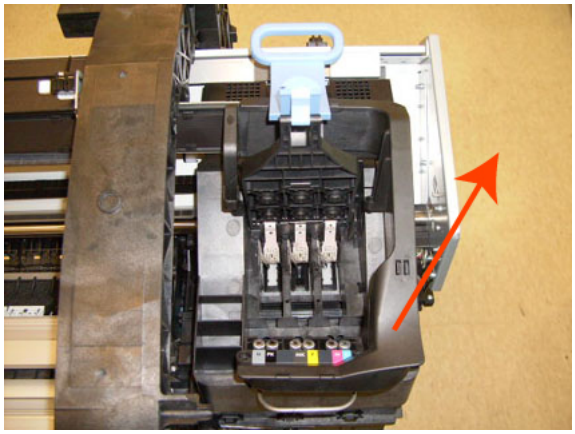

15. Close and lock the Carriage Cover.

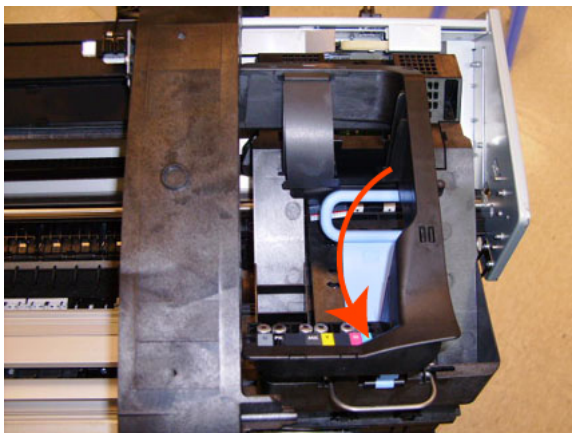

16. Loosen the T-10 uncapping screw sufficiently so you can move the Carriage Assembly manually.

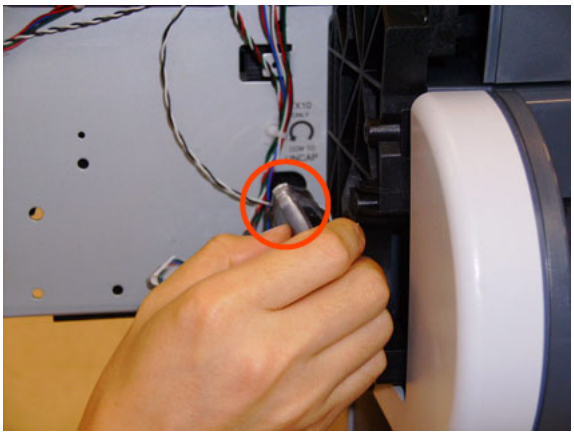

17. Push the Carriage Assembly into the print path.

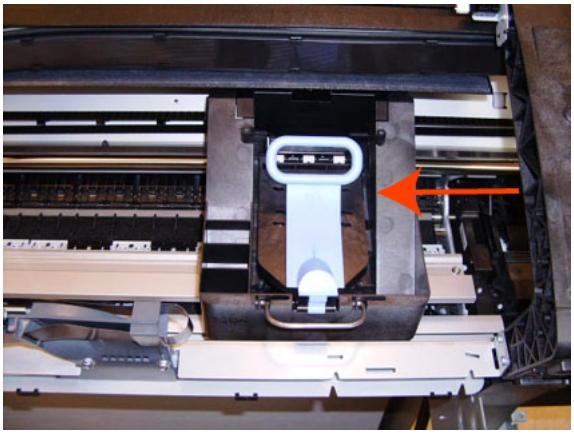

18. Remove the cover on each side of the Carriage PCA using a screwdriver unclip it.

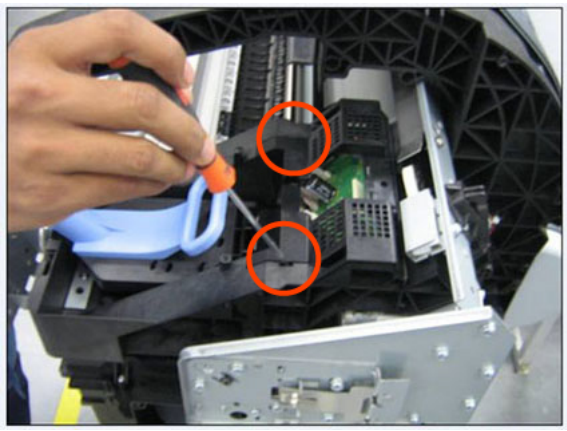

19. Disconnect the Line Sensor electrical connection from the Carriage PCA.

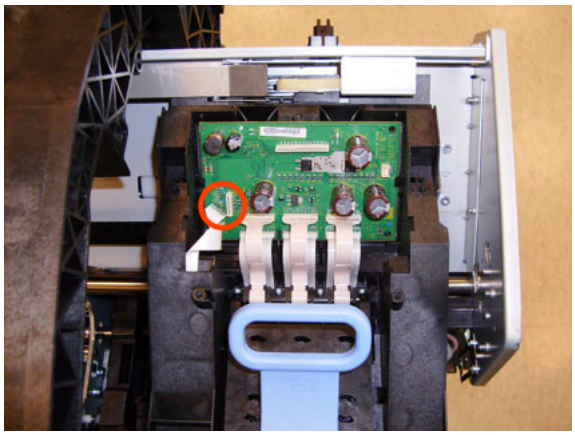

20. Carefully unroute the Line Sensor cable from the Carriage Assembly.

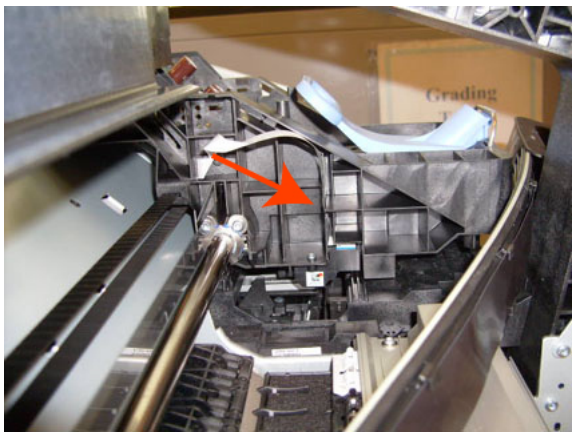

21. Remove one T-10 screw that secures the Line Sensor to the Carriage Assembly.

22. Remove the Line Sensor from Carriage Assembly.

NOTE: When you finish installing or replacing this component, you must perform the necessary Service Calibrations. To find which calibrations you must perform, see Service Calibration Guide to Removal and Installation on page 267.

Media Advance Drive

Removal

1. Switch off the product and remove the power cable.
2. Remove the Left Cover on page 403.
3. Remove the EE Box on page 359.
4. Remove the Spittoon, Left on page 503.
5. Remove the Encoder Disk and Encoder Sensor on page 364.
6. Unroute the Media Advance Drive power cable.

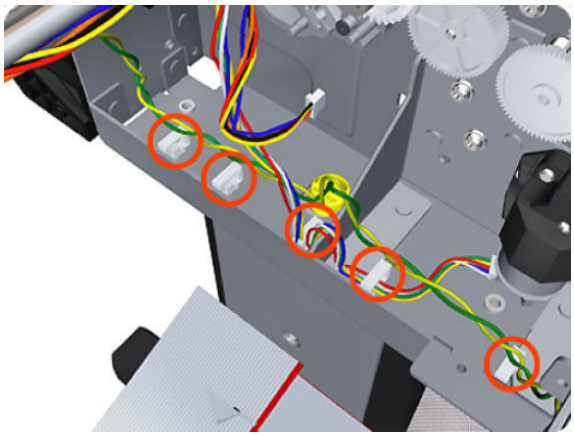

7. Remove three T-20 screws that secure the Media Advance Drive to the product.

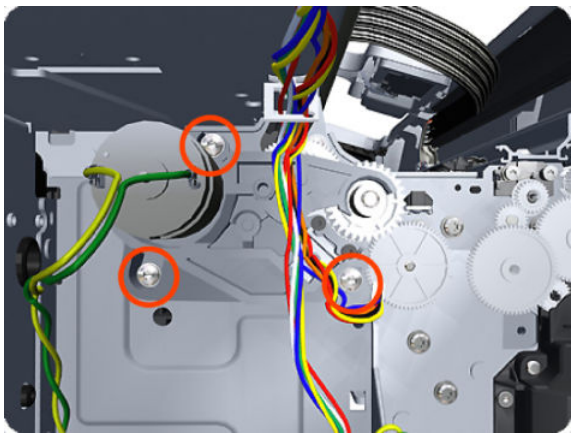

8. Grip the motor housing of the Media Advance Drive and gently pull it towards you sufficiently to allow you disengage the Media Advance Drive from the product.

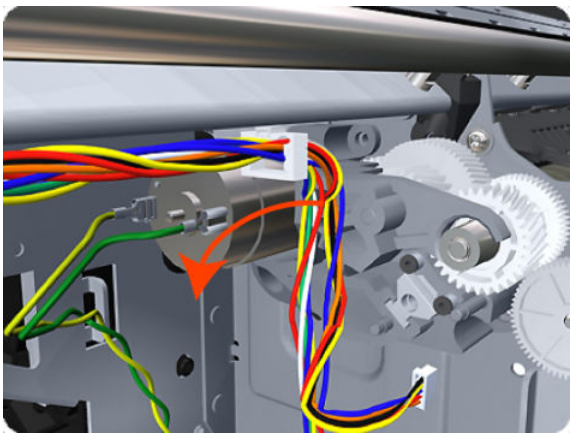

9. Carefully lift the Media Advance Drive out of the product.

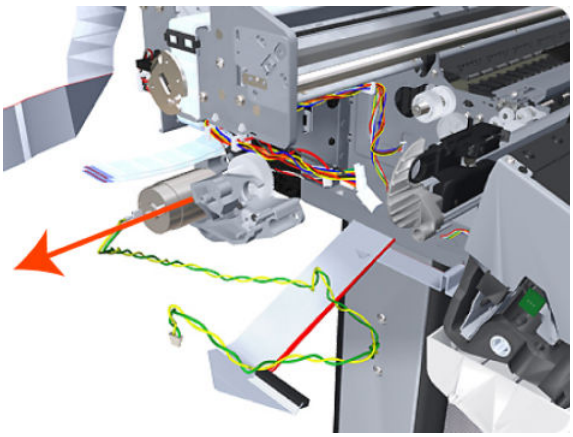

Installation without encoder sensor adjustment

Use the following procedure to install and adjust a new Media Advance Drive. This is the normal procedure that should be followed in most cases. You will need Media Advance Drive Adjustment Tool from the Tool Kit (Q6683-67001).

1. Carefully position the Media Advance Drive in the product.

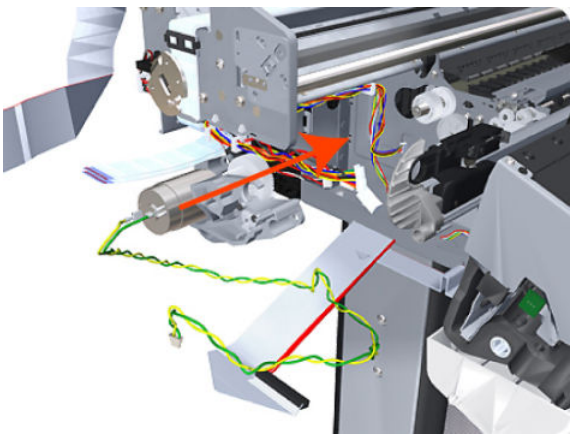

2. Be careful not to touch the encoder sensor adjustment screw; not even when replacing the encoder disc and sensor.

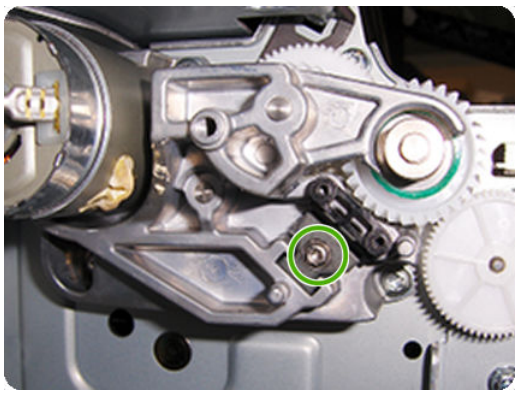

3. Insert the three T-15 attachment screws, but do **not** fully tighten them.

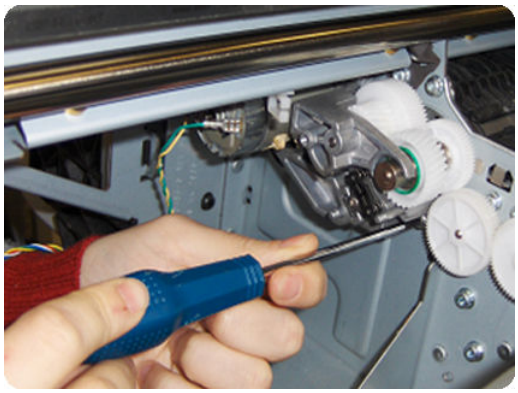

4. Position the Media Advance Drive Adjustment Tool on the end Media Advance Roller shaft, push it firmly onto the shaft and maintain a constant pressure to ensure it is flush to the Media Advance Drive.

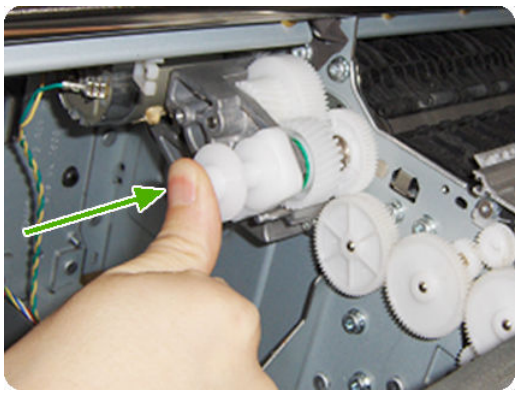

5. While maintaining pressure on the Media Advance Drive Adjustment Tool, fully tighten the three T-15 attachment screws in the order shown.

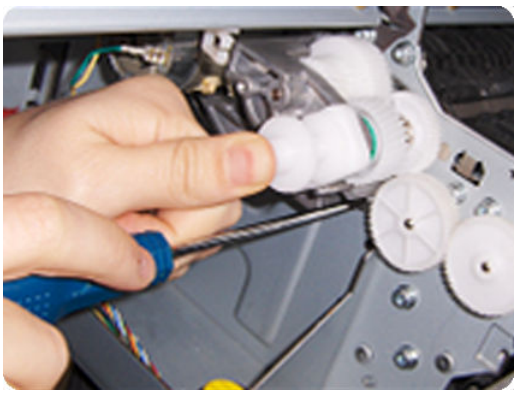

6. Remove the Media Advance Drive Adjustment Tool.

Installation with encoder sensor adjustment

Use the following procedure to install and adjust a new Media Advance Drive, and to adjust the encoder sensor. This procedure is recommended only when the motor mount has to be replaced or the encoder sensor has to be readjusted. You will need Media Advance Drive Adjustment Tool from the Tool Kit (Q6683-67001).

1. Carefully position the Media Advance Drive in the product.

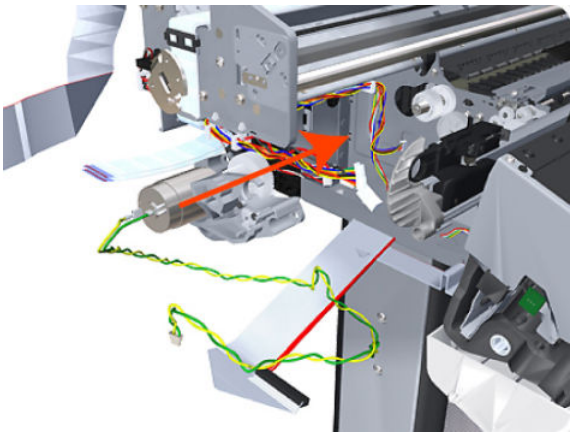

2. Insert the three T-15 attachment screws, but do **not** fully tighten them.

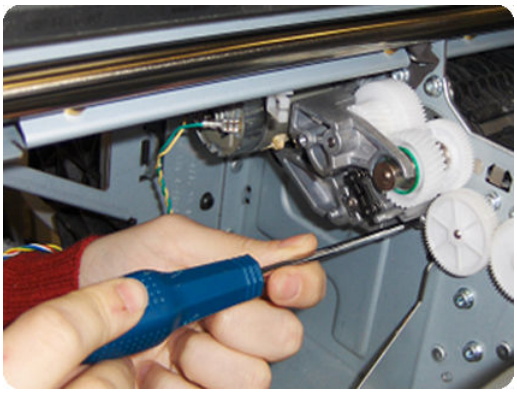

3. Loosen the encoder sensor adjustment screw.

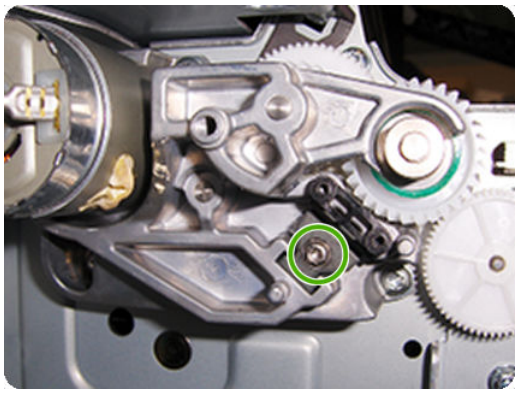

4. Add the Encoder Sensor Tool to the Media Drive Adjustment Tool.

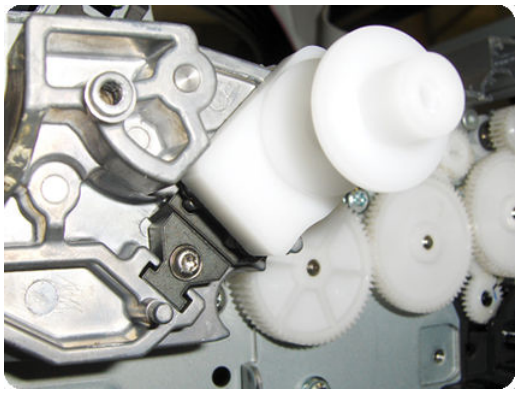

5. Position the Media Advance Drive Adjustment Tool on the end Media Advance Roller shaft, push it firmly onto the shaft and maintain a constant pressure to ensure it is flush to the Media Advance Drive.

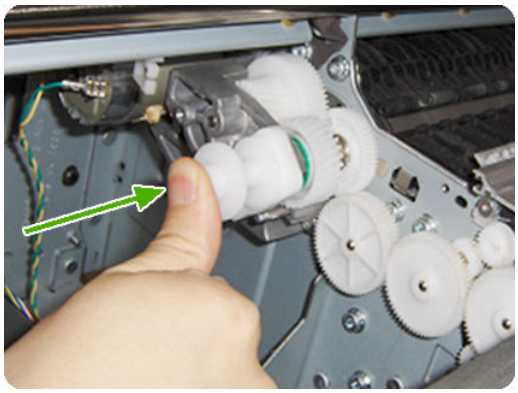

6. While maintaining pressure on the Media Advance Drive Adjustment Tool, fully tighten the three T-15 attachment screws in the order shown.

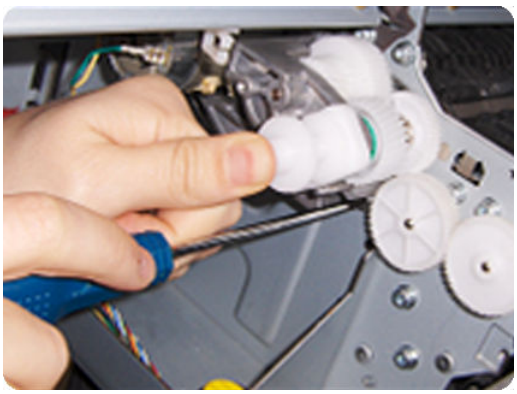

7. While maintaining pressure on the Media Advance Drive Adjustment Tool, fully tighten the encoder sensor adjustment screw.

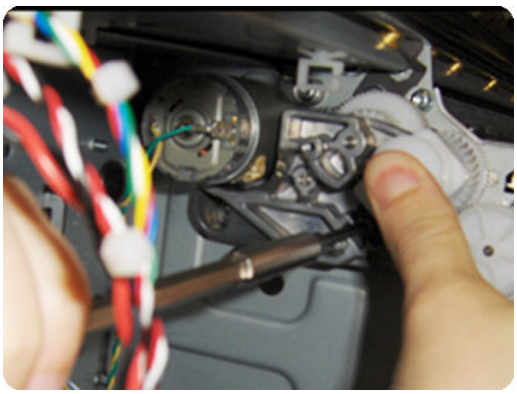

8. Remove the Media Advance Drive Adjustment Tool.

Encoder disk assembly

1. Remove the paper that protects the glue of a new encoder.

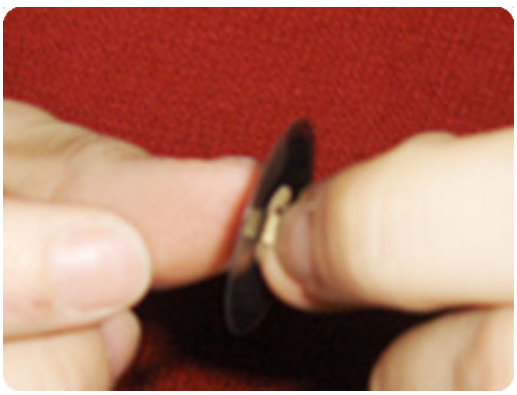

2. Pre-assemble the encoder on the roller without using pressure.

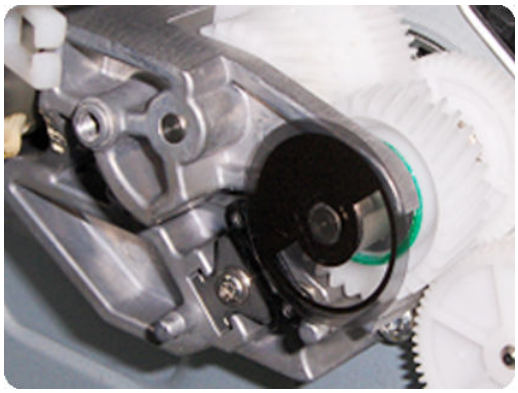

3. Press the encoder using the Media Advance Drive Adjustment Tool (reversed) so that it sticks to the roller.

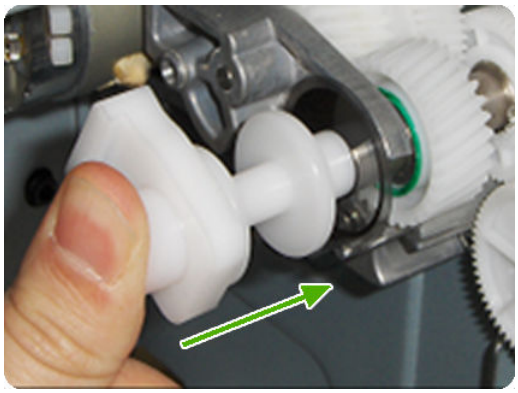

NOTE: When you finish installing or replacing these components, you must perform the necessary Service Calibrations. To find which calibrations you must perform, see Service Calibration Guide to Removal and Installation on page 267.

Media Lever

Removal

1. Switch off the product and remove the power cable.
2. Remove the Left Panel on page 435.
3. Unclip the spring from the attachment points on the Media Lever and Left Cover.

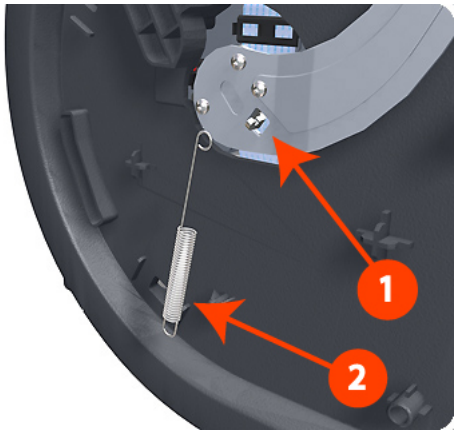

4. Remove three T-15 screws that secure the Media Lever.

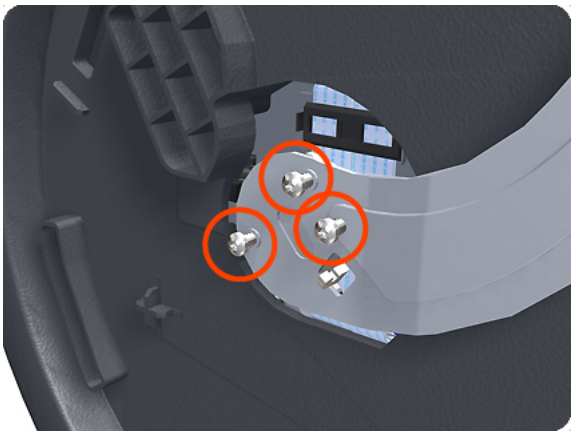

5. Lift the Media Lever of the mounting.

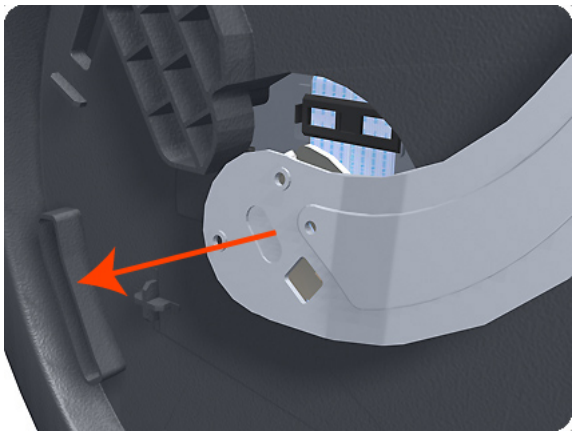

6. Remove the Media Lever from the product.

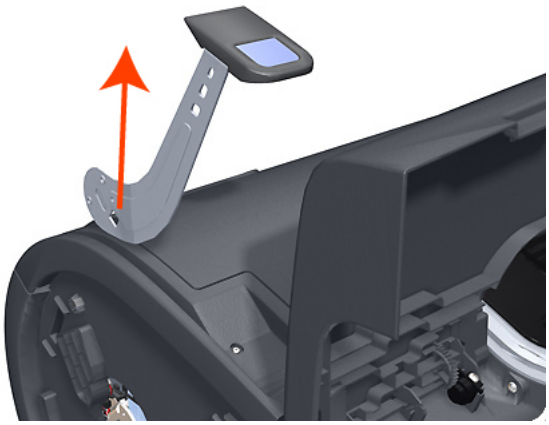

Media Lever Position Sensor

Removal

1. Switch off the product and remove the power cable.
2. Raise the Media Lever.
3. Remove the Left Cover on page 403.
4. Disconnect the Media Lever Position Sensor.

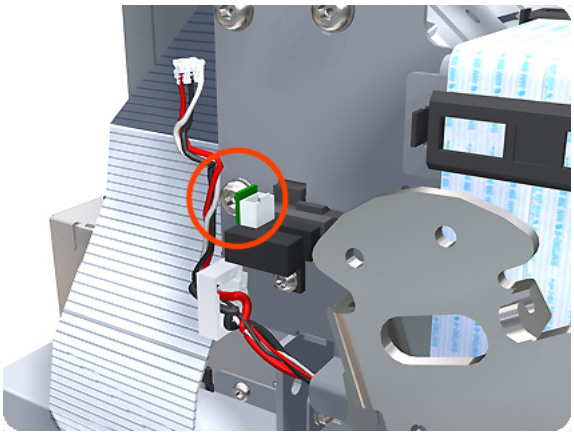

5. Remove one T-10 screw that secures the Media Lever Position Sensor to the Scan Side Panel.

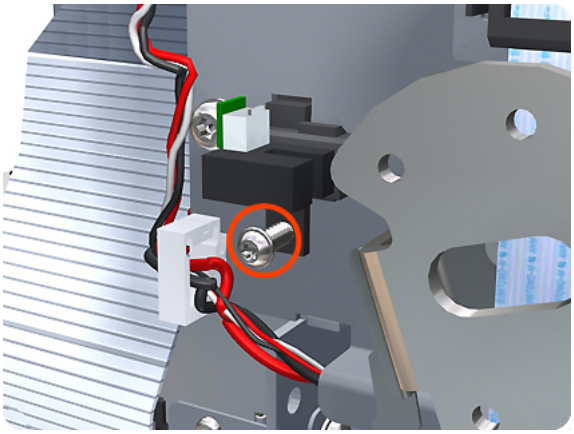

6. Rotate the Media Lever Position Sensor vertically to disengage the attachment lug from the Scan Side Panel.

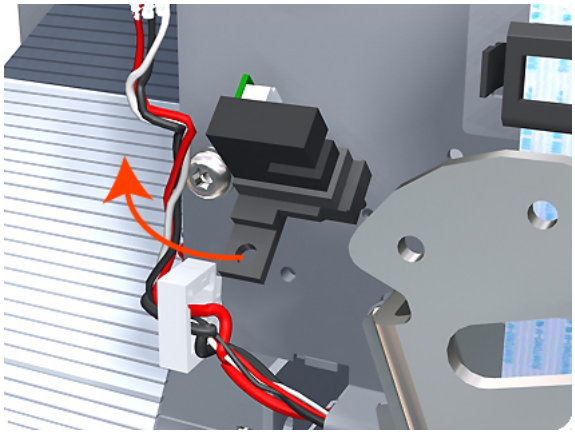

7. Remove the Media Lever Position Sensor.

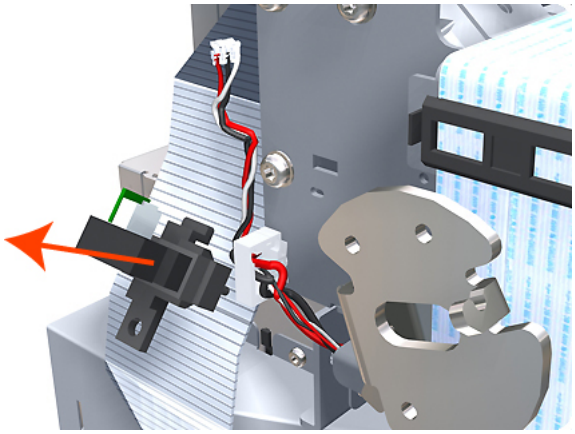

NOTE: When you finish installing or replacing this component, you must perform the necessary Service Calibrations. To find which calibrations you must perform, see Service Calibration Guide to Removal and Installation on page 267.

Media Output Assembly

Removal

1. Switch off the product and remove the power cable.
2. Remove the Front Cover on page 349.
3. Remove four T-15 screws and washers that secure the Media Output Assembly to the product.

4. Release the four attachment clips.

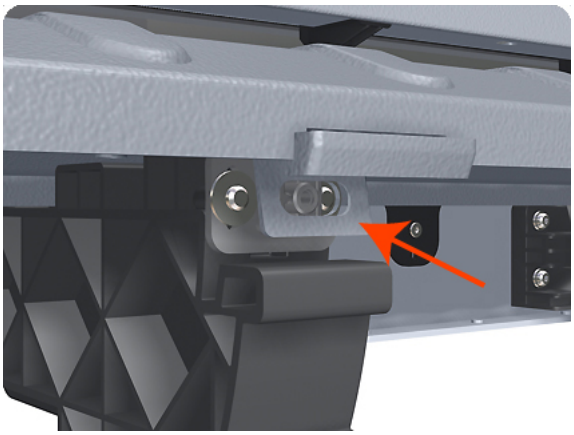

5. Lift the front of the Media Output Assembly.

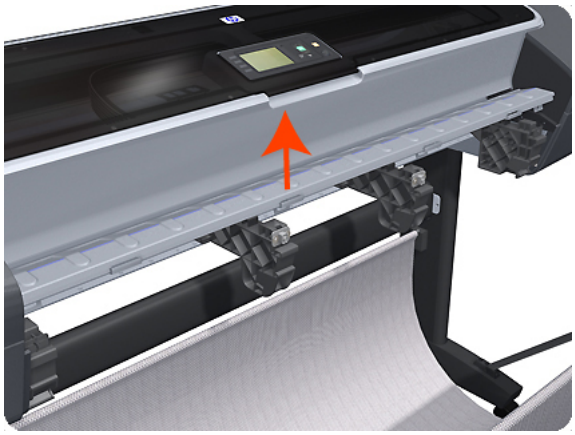

6. Slide the Media Output Assembly forwards out of the product.

Out-of-paper Sensor

Removal

1. Switch off the product and remove the power cable.
2. Remove the Spindle on page 502.
3. Remove the Cleanout on page 328.
4. Unroute the Out Of Paper Sensor electrical cables from the Clean Out Assembly.

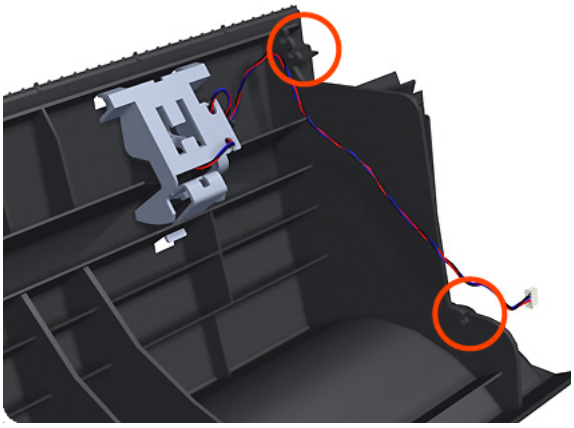

5. Unroute (unwind) the Out Of Paper Sensor electrical cables from the Out Of Paper Sensor cover.

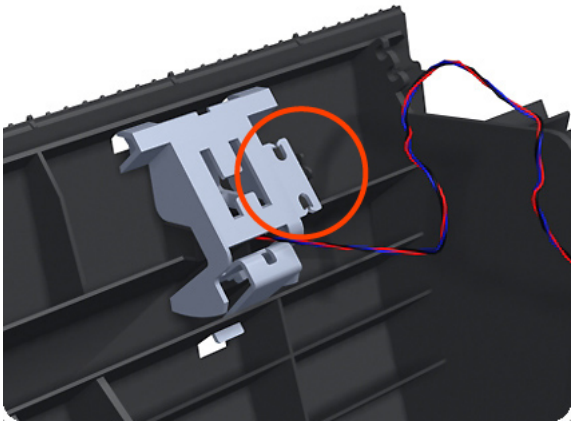

6. Press the clip to remove the Out Of Paper Sensor cover from the Clean Out Assembly.

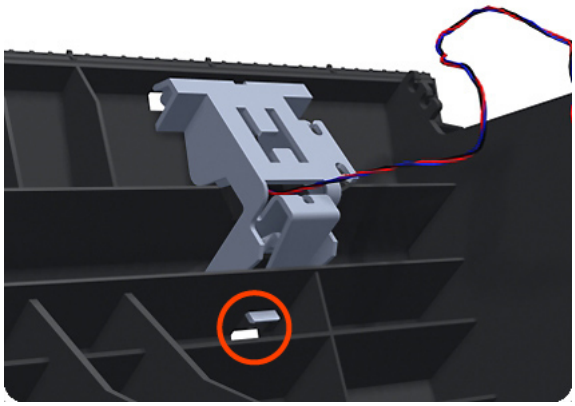

7. Rotate the Out Of Paper Sensor cover approximately 45 degrees.

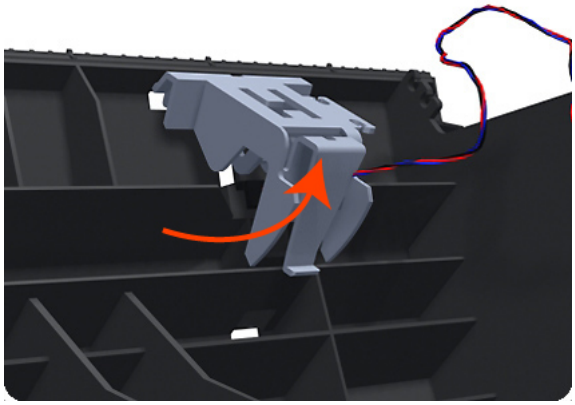

8. Remove the Out Of Paper Sensor cover from the Clean Out Assembly.

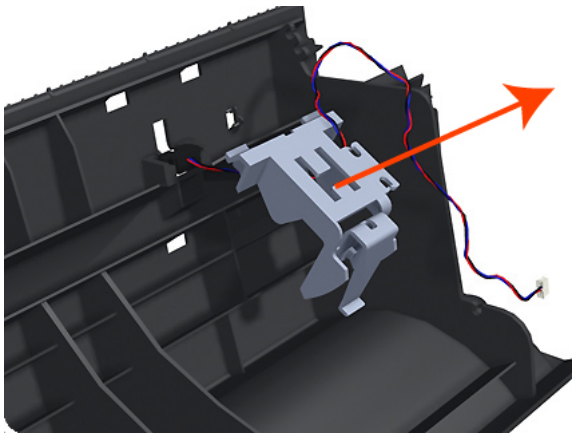

9. Squeeze the Out Of Paper Sensor attachment clips to remove it from the Clean Out Assembly.

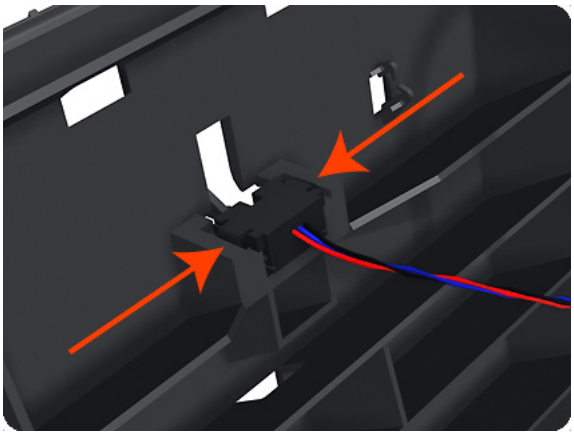

10. Lift the Out Of Paper Sensor out of the Clean Out Assembly.

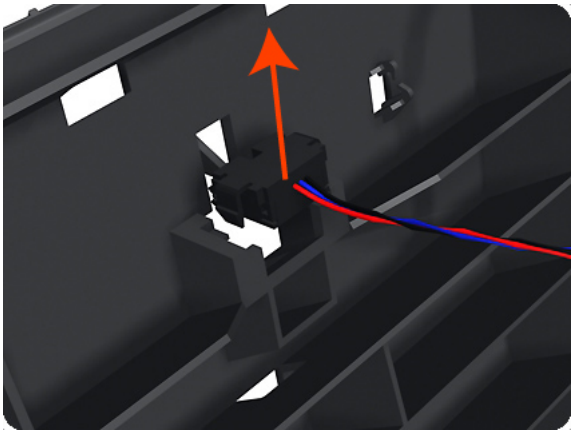

NOTE: When you finish installing or replacing this component, you must perform the necessary Service Calibrations. To find which calibrations you must perform, see Service Calibration Guide to Removal and Installation on page 267.

Left Panel

This part can be replaced by customers who have the appropriate flier.

Removal

1. Open the ink cartridge cover on the left.

2. Remove the ink cartridges.

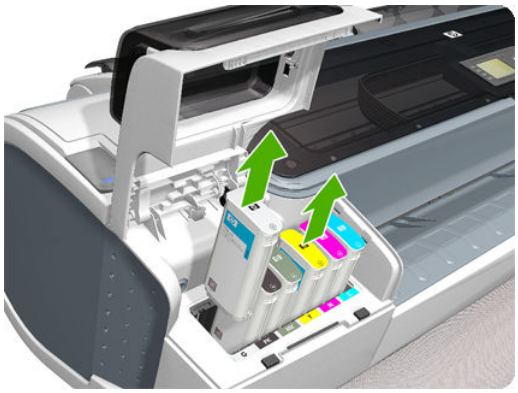

3. Remove the T-15 screw that attaches the left panel to the left cover.

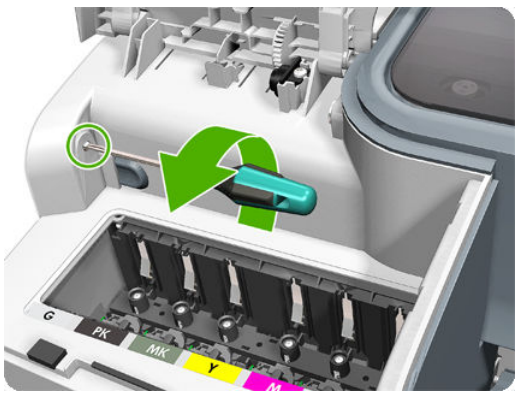

4. Press the clip as shown to free the left panel.

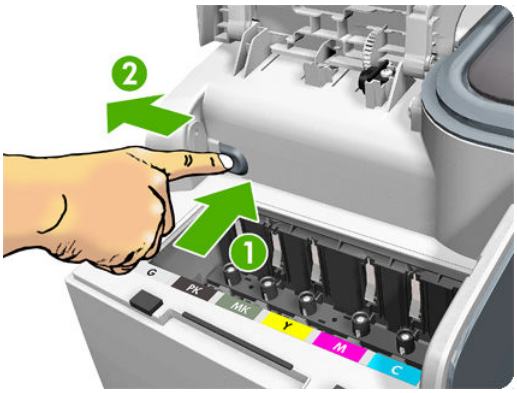

5. Remove the left panel.

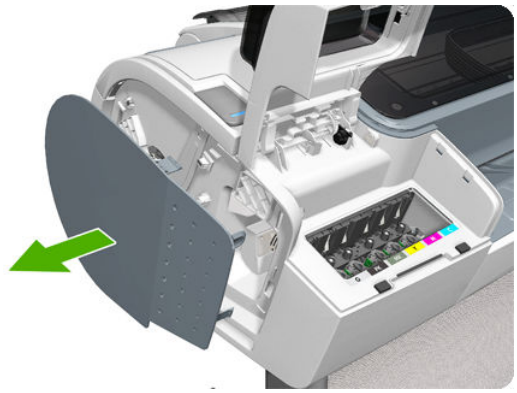

Pen to Paper Space (PPS) Solenoid

Removal

1. Switch off the product and remove the power cable.
2. Remove the Right Cover on page 463.
3. Unroute the Pen to Paper Space (PPS) Solenoid cable from the cable clamp.

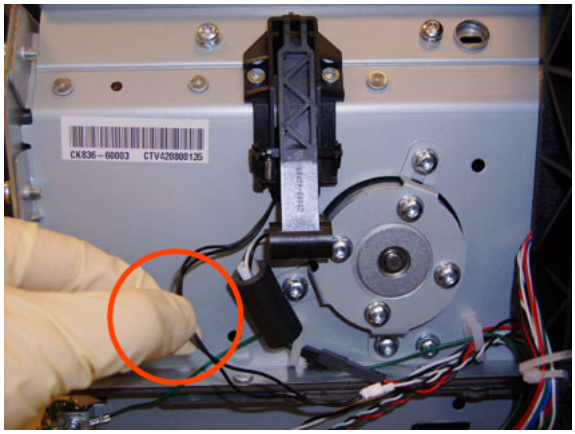

4. Disconnect the Pen to Paper Space (PPS) Solenoid connector from the L1 Data Harness.

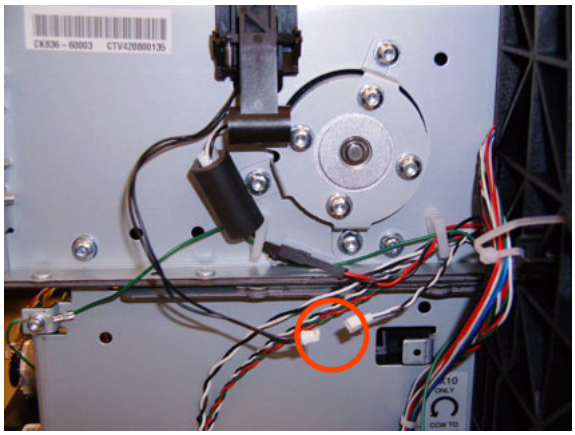

5. Remove two T-10 screws that secure the Pen to Paper Space (PPS) Solenoid to the product.

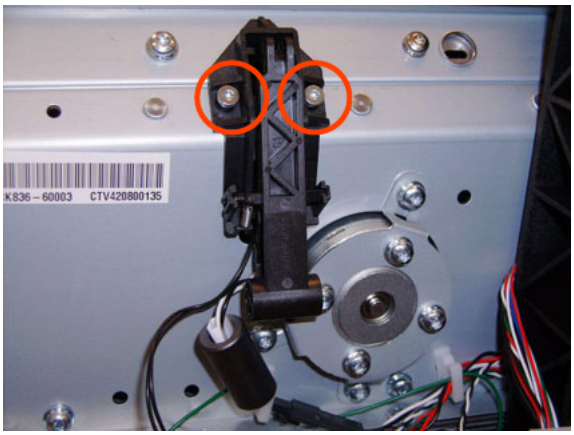

6. Remove the Pen to Paper Space (PPS) Solenoid from the product.

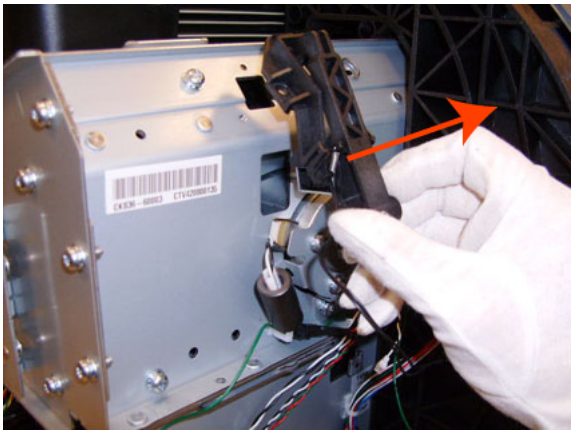

NOTE: When you finish installing or replacing this component, you must perform the necessary Service Calibrations. To find which calibrations you must perform, see Service Calibration Guide to Removal and Installation on page 267.

Pinch Arm Assembly

These parts can be replaced by customers who have the appropriate flier.

Removal and installation

1. Open the upper or lower roll cover.

2. Remove the spindle.

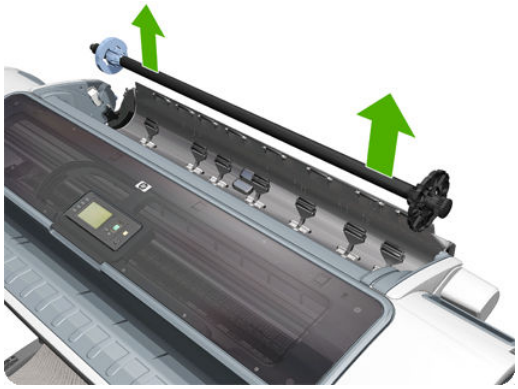

3. Unscrew the pinch arm assembly.

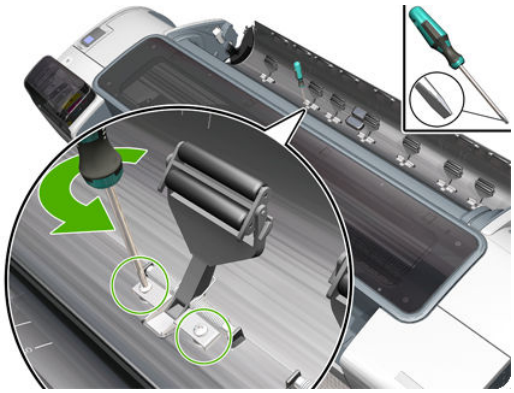

4. Remove the pinch arm assembly.

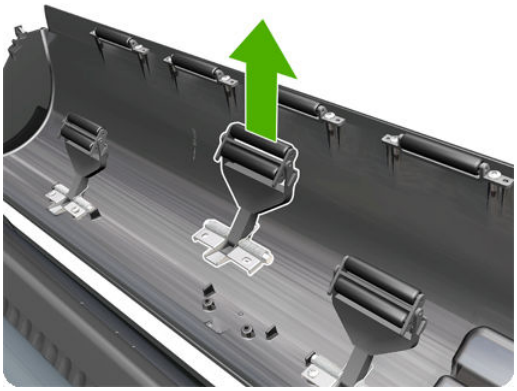

5. Locate the new pinch arm assembly and screws.

6. Fit the pinch arm assembly to the roll cover.

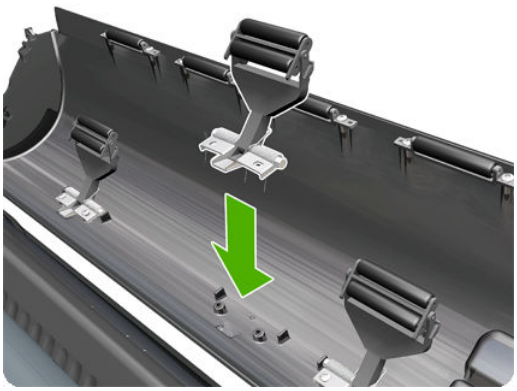

7. Screw the pinch arm assembly to the roll cover.

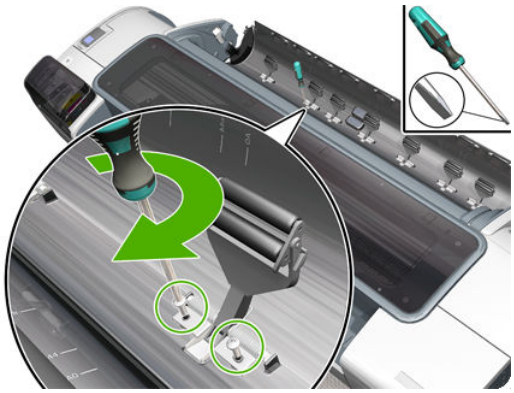

8. Insert the spindle.

9. Close the roll cover.

Pinchwheel Assembly

Removal

1. Switch off the product and remove the power cable.
2. Open the Scanner (MFP only) or Window.

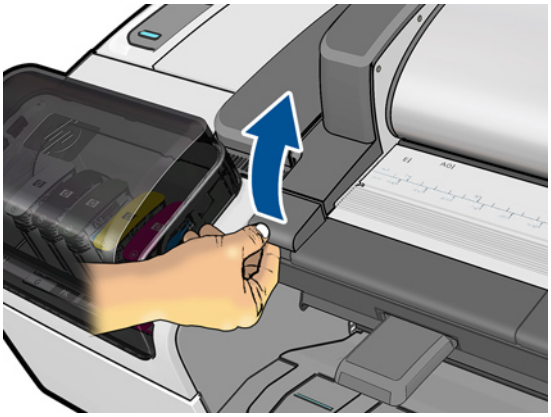

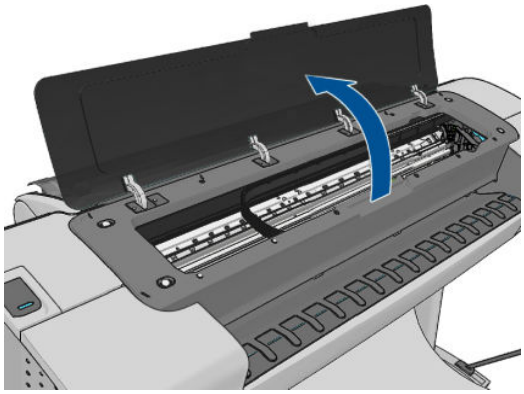

3. Remove the Spindle on page 502.
4. Remove the Left Roll Guide on page 479.
5. Remove the Right Roll Guide on page 480.
6. Raise the Media Lever.

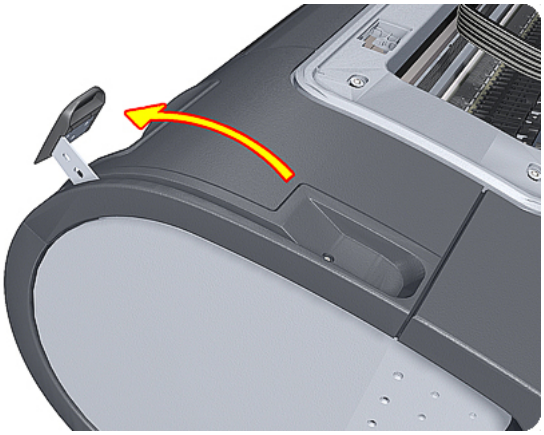

7. Use the Pinchwheel Insertion Tool to remove the spring from the attachment on the product.

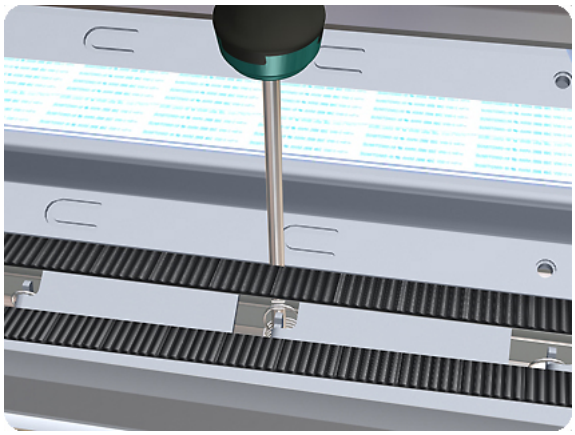

8. Remove two T-10 screws that secure the to the product.

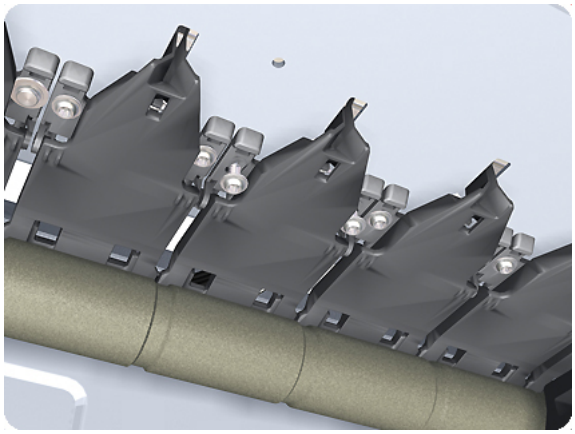

9. Remove the from the product.

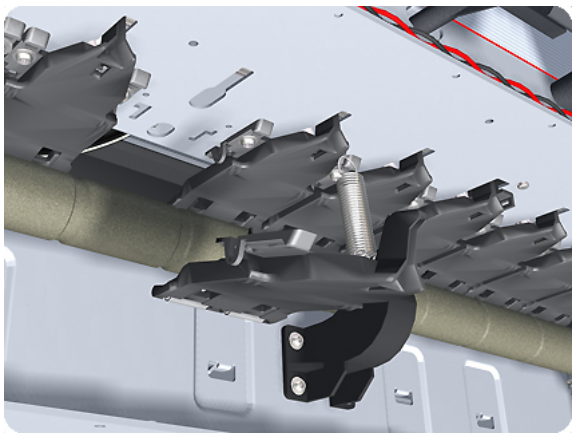

Installation

Use the following procedure to align the using the Pinchwheel Alignment Tool during reassembly.

NOTE: Never remove and replace all the Pinchwheel Assemblies at the same time. In order to align a , you need a minimum one correctly aligned by the manufacturer.

1. Insert the Pinchwheel Insertion Tool through the appropriate access hole for the you are installing.

⚠ CAUTION: Be very careful not to damage the Encoder Strip or the Belt Assembly with the Pinchwheel Insertion Tool.

2. Position the new correctly on its hanger.

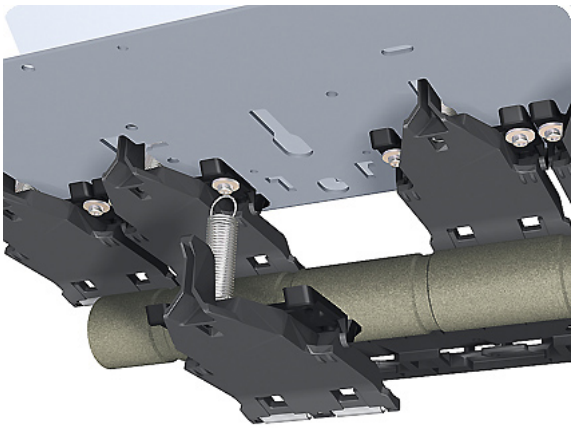

3. Hook the spring of the you are installing with the Pinchwheel Insertion Tool.

4. Attach the spring to its attachment point on the hanger and remove the Pinchwheel Insertion Tool.

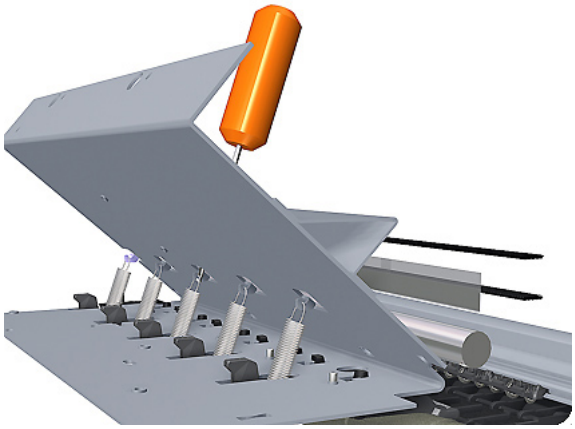

5. Attach the new with the two T-15 screws that secure to the product but do fully **not** tighten the screws.

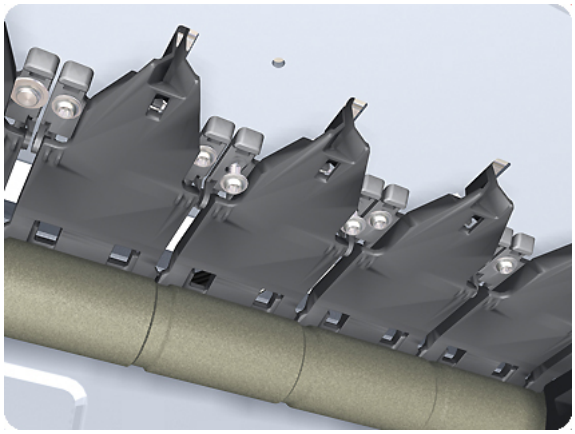

6. Lower the Media Lever.

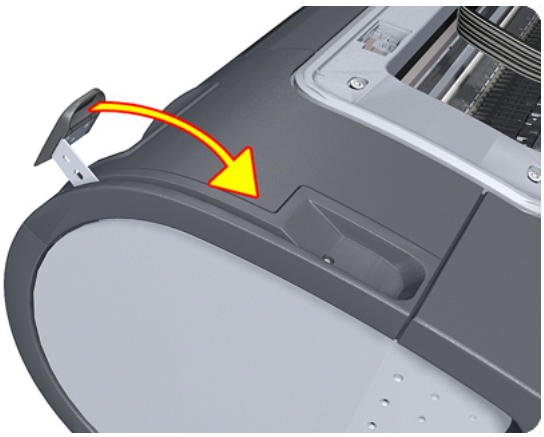

7. Make sure the Pinchwheel Alignment Tool is in the collapsed position.

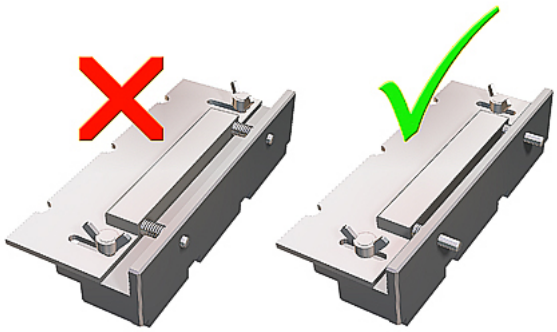

8. Fit the end of the Pinchwheel Alignment Tool to the you need to align.

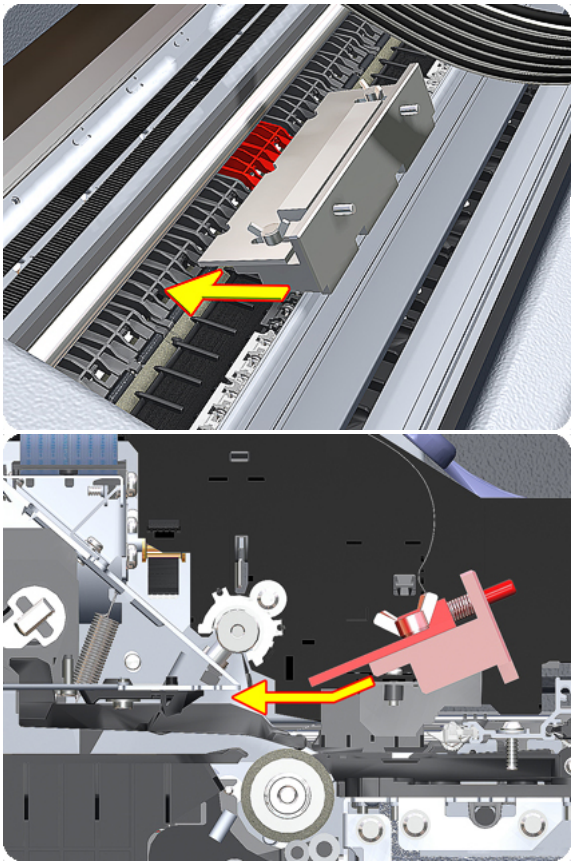

9. Set the Pinchwheel Alignment Tool on the print platen. The tool should fit as shown below.

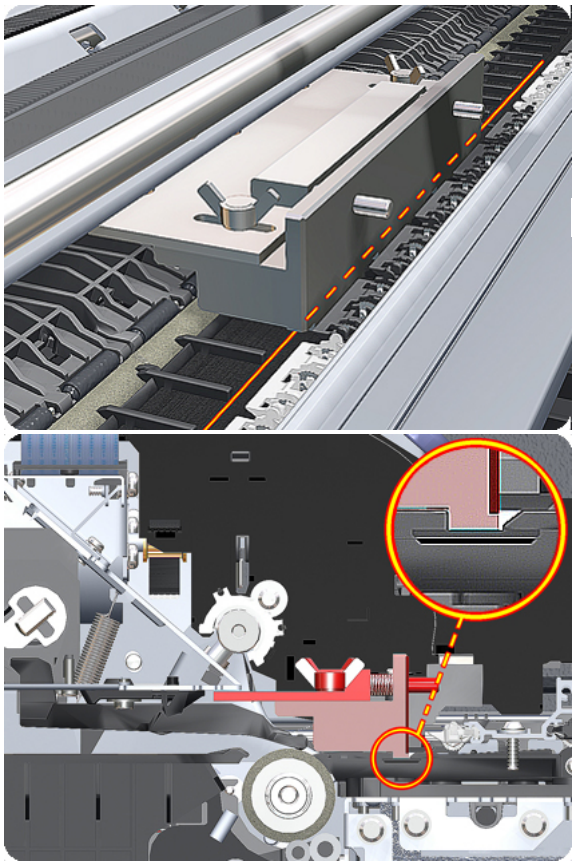

10. Loosen the wing nuts on the Pinchwheel Alignment Tool.

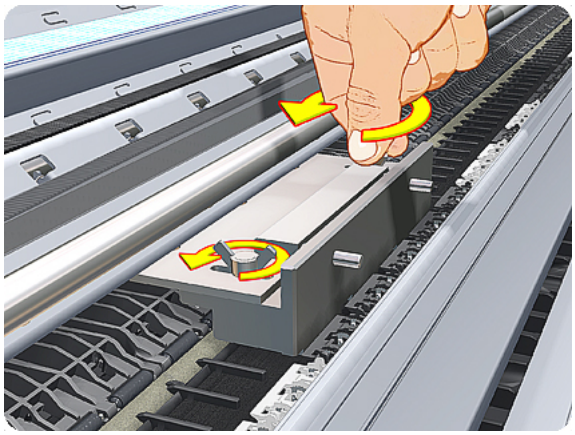

11. Allow the Pinchwheel Alignment Tool to expand. Make sure that the tool is fully expanded.

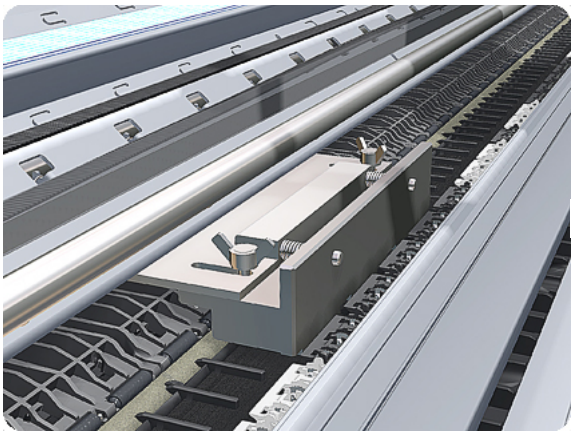

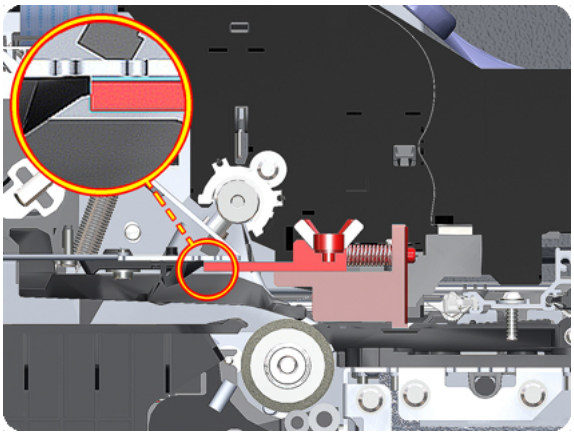

12. When the Pinchwheel Alignment Tool is fully expanded, the is properly aligned.

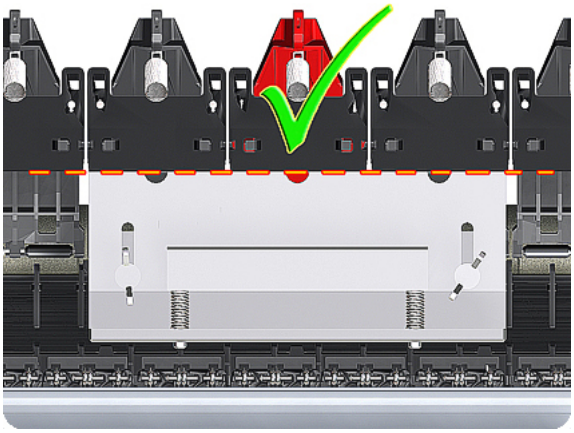

13. Fully tighten the two T-15 attachment screws that secure the to the product.

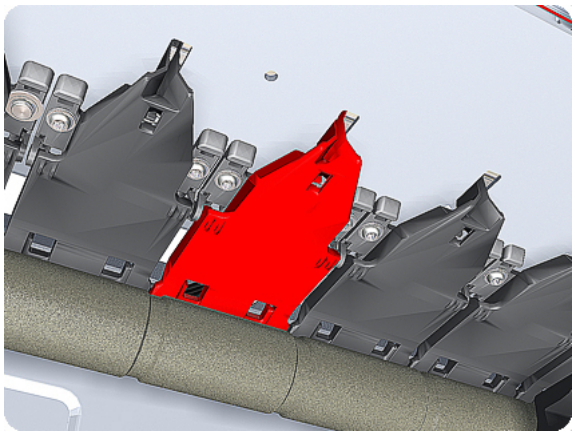

14. Collapse the Pinchwheel Alignment Tool to remove it.

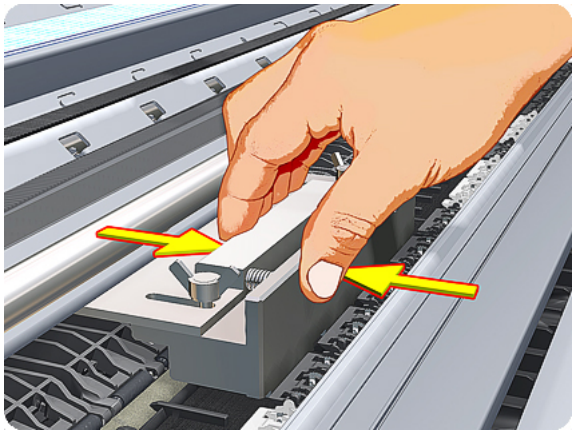

15. Remove the Pinchwheel Alignment Tool from the product.

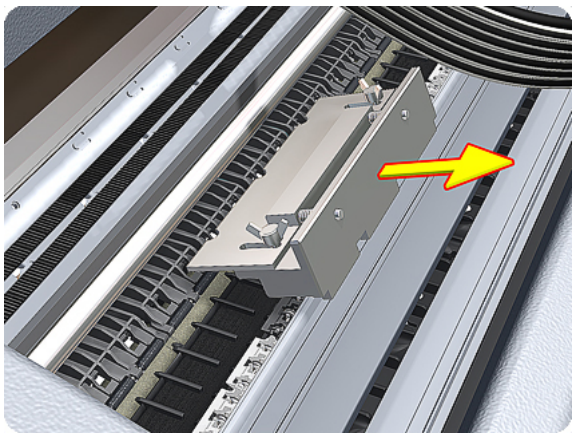

NOTE: When you finish installing or replacing this component, you must perform the necessary Service Calibrations. To find which calibrations you must perform, see Service Calibration Guide to Removal and Installation on page 267.

Print Zone Overdrive

Removal

The Print Zone Overdrive is in two sections (left and right). This procedure describes the removal of both sections. If you want to remove only one of the sections, skip the steps for the other section.

1. Switch off the product and remove the power cable.
2. Remove the Starwheel Assembly on page 504.
3. Remove one T-8 screw that secures the left clamp of the Print Zone Overdrive to the Platen.

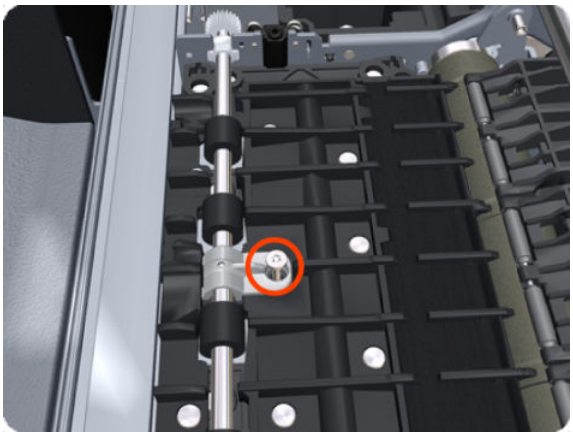

4. Lift attachment clamp vertically to release it from the Platen.

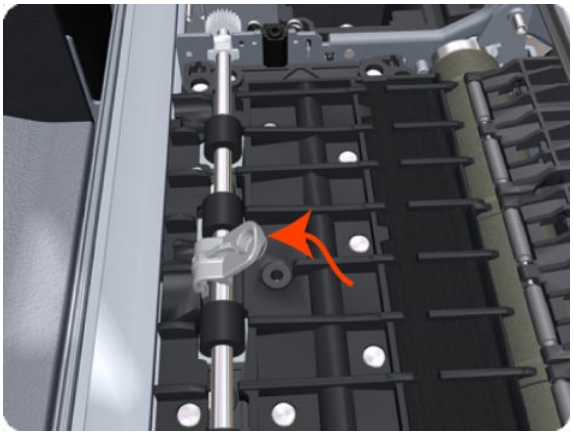

5. Remove the clamp.

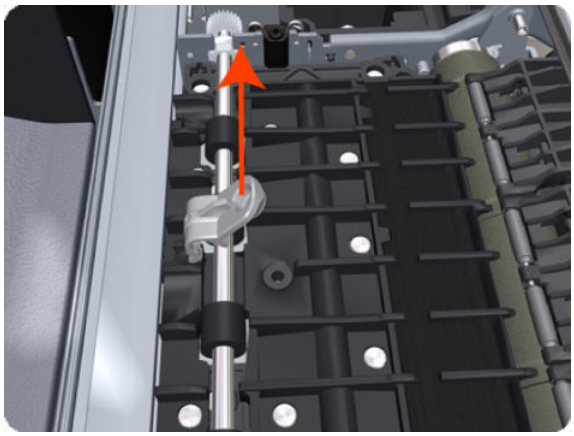

6. Repeat the three preceding steps to remove the remaining five attachment clamps.

7. Use a flat-bladed screwdriver to unclip the left Print Zone Overdrive retaining clip and rotate the clip vertically.

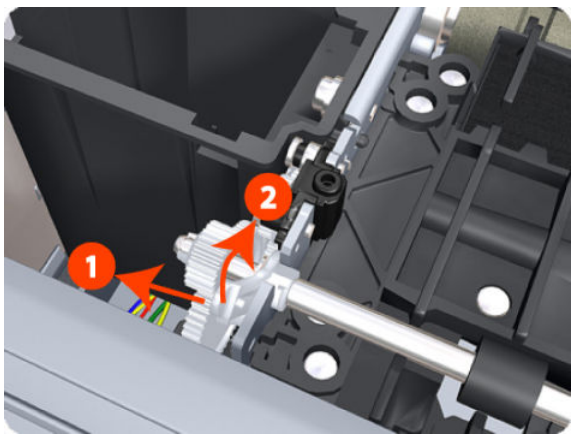

8. Carefully lift the left Print Zone Overdrive enough (10 mm) so you can slide it to the left.

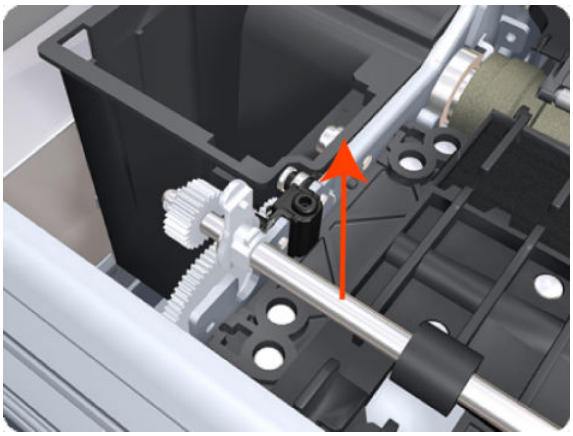

9. Slide the left Print Zone Overdrive to the left disengage the center coupling.

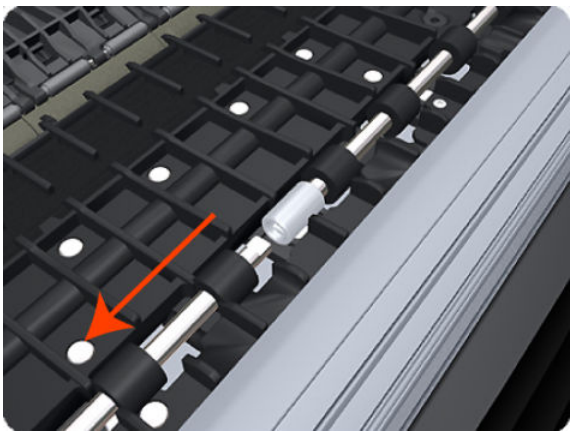

10. Carefully lift the left Print Zone Overdrive out of the product.

11. Remove the center coupling.

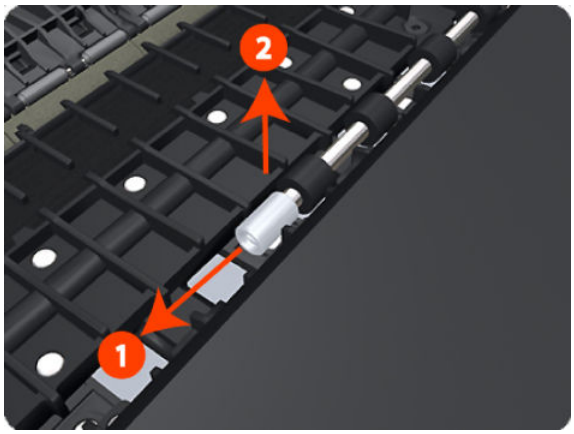

12. Use a flat-bladed screwdriver to unclip the left Print Zone Overdrive retaining clip and rotate the clip vertically.

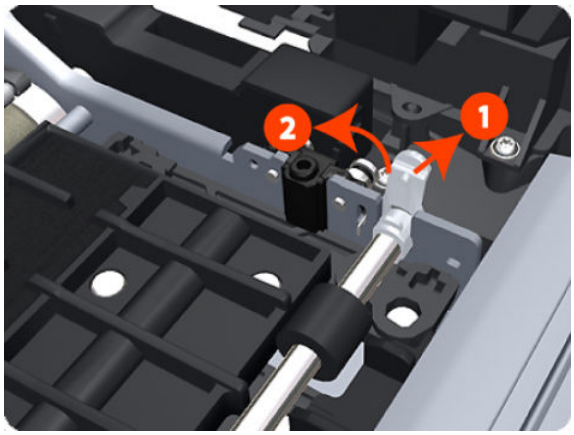

13. Carefully lift the right Print Zone Overdrive out of the product.

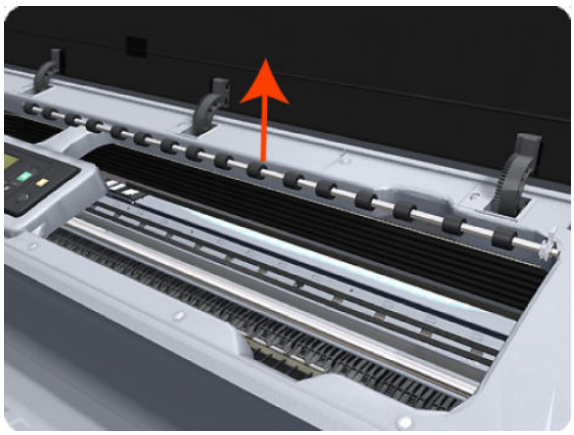

NOTE: When you finish installing or replacing this component, you must perform the necessary Service Calibrations. To find which calibrations you must perform, see Service Calibration Guide to Removal and Installation on page 267.

Power Supply Unit

1. Remove the EE Box on page 359.
2. Unscrew a series of screws as shown.

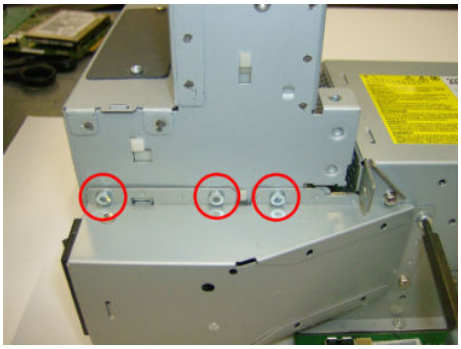

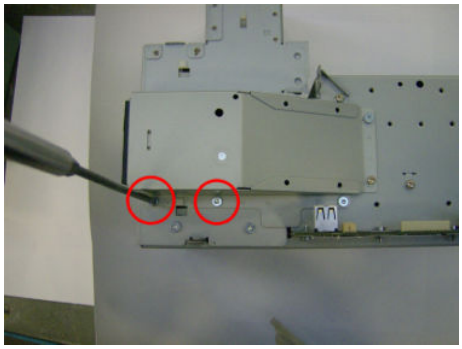

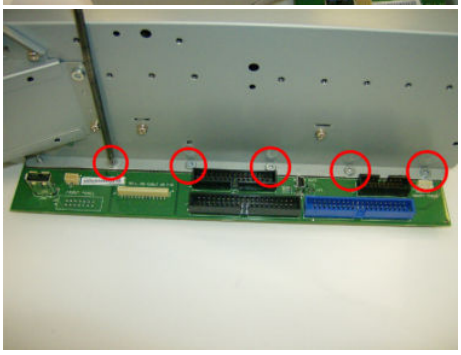

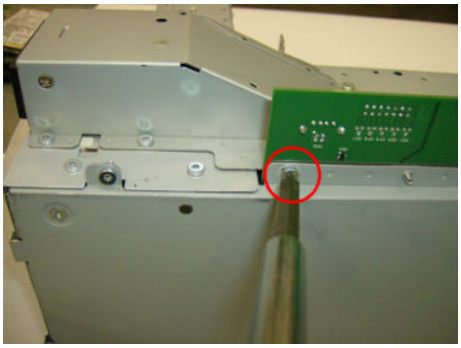

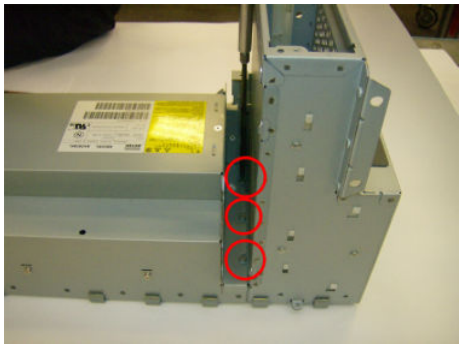

3. Remove the PSU module from the EE box base.

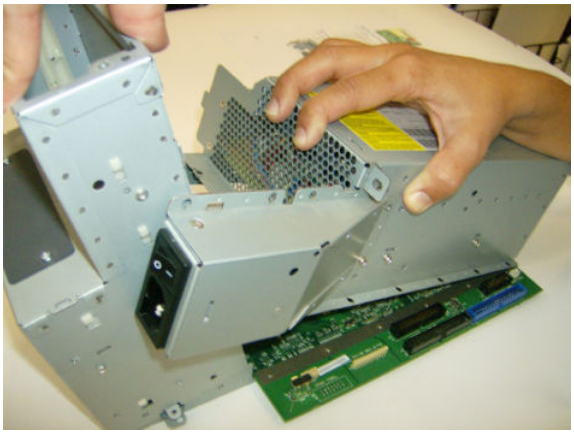

4. Disconnect cable and hooks.

Real-time Clock Battery

Removal and installation

1. Turn the product off and unplug the cable. Unplug any network or USB cables.
2. Remove the screws that attach the formatter to the product with your fingers, or with the help of a flat screwdriver, and remove the formatter.
3. Locate the round, flat battery in the formatter.
4. Push the battery slightly to one side and then pull it up. A little force may be required.
5. Insert the new battery by pressing it down.
6. Insert the formatter into the product by pressing it down, and tighten the screws.
7. Reconnect the cables and turn the product on.

Rear Cover (MFP only)

Removal

1. Switch off the product and remove the power cable.
2. Open the Upper Roll Cover.
3. The deflector indicated must be removed first.

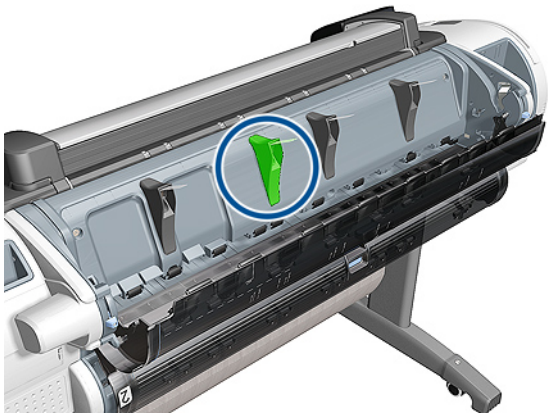

4. Remove one T-10 screw that secures the deflector.

5. Remove the deflector assembly.

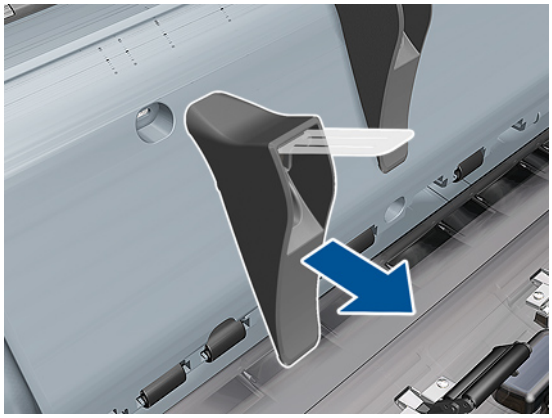

6. Remove six T-15 screw.

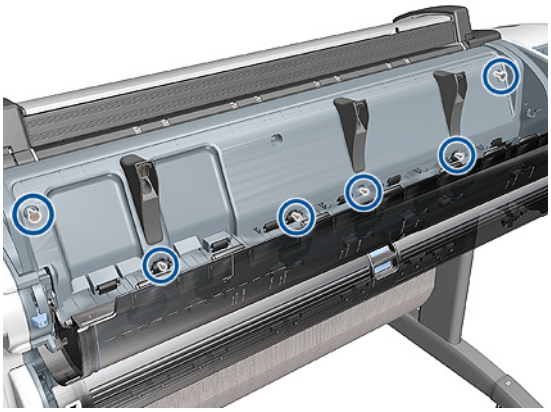

7. Remove the Rear Cover and place on a flat surface.

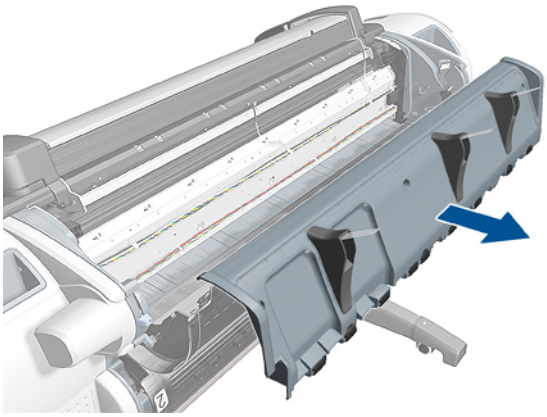

8. Remove the remaining deflectors from the old Rear Cover, by removing one screw from each deflector.

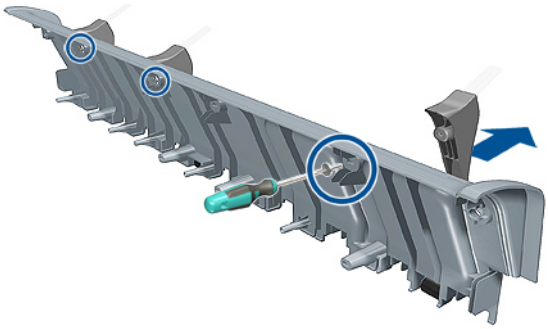

Installation

1. Install the three old deflectors onto the new Rear Cover and place the Rear cover Assembly onto the back of the product (but DO NOT install the indicated deflector yet).

2. Install the remaining deflector onto the new Rear Cover and secure it with one T–10 screw.

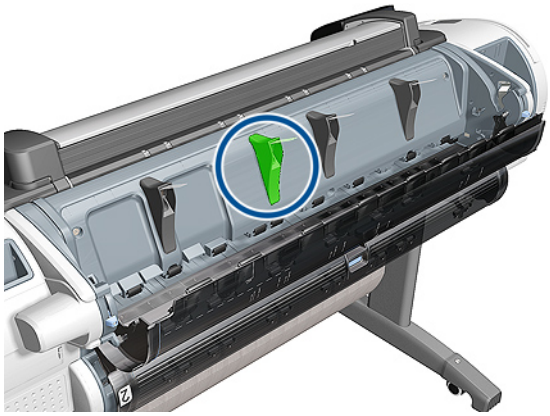

3. Secure the new Rear Cover on to the back of the product with six T-10 screws.

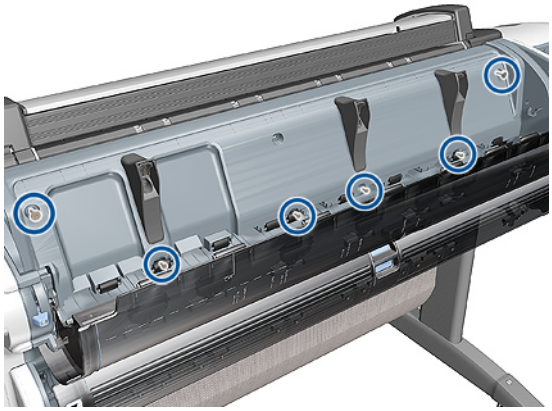

Rear Cover

Removal

1. Switch off the printer and remove the power cable.
2. Remove the Roll Cover, Upper on page 477.
3. Remove the Converger on page 334.
4. Remove the six T-15 and four T-20 screws that secure the Rear Cover to the printer.

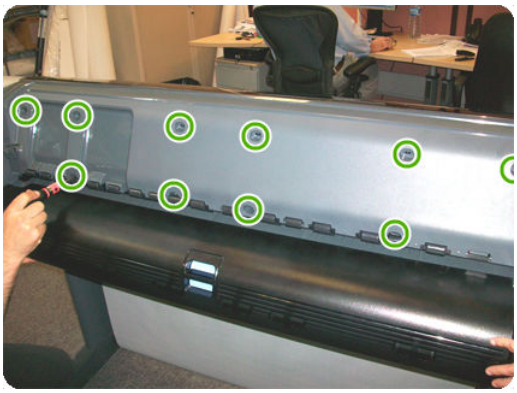

5. Remove the Rear Cover from the printer.

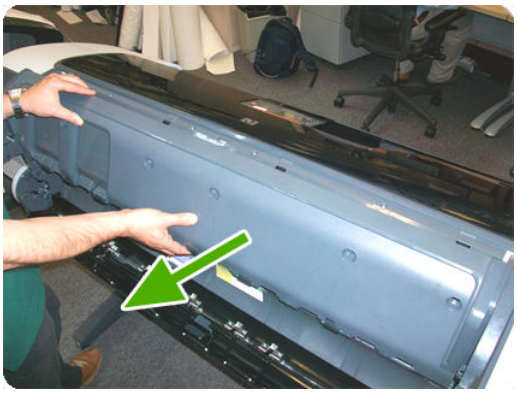

Rear Deflectors

Center Right Rear Deflector

The Center Right Rear Deflector has a different removal procedure than the other rear deflectors

1. Remove one T-10 screw from the Center Right Rear Deflector.

2. Remove the Center Right Rear Deflector.

Remaining Rear Deflectors

1. Remove six T-15 screw.

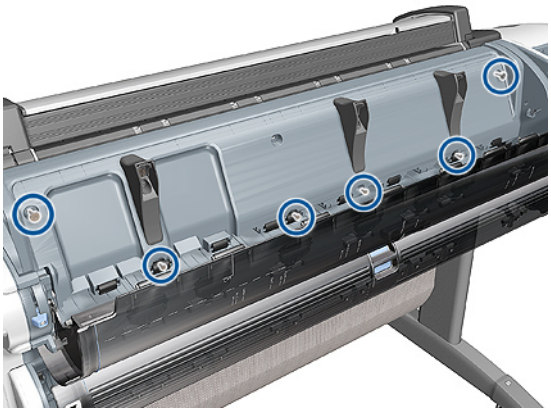

2. Remove the Rear Cover and place on a flat surface.

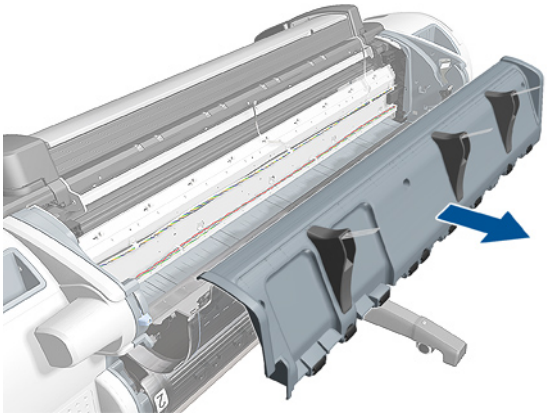

3. Remove the remaining deflectors from the old Rear Cover, by removing one screw from each deflector.

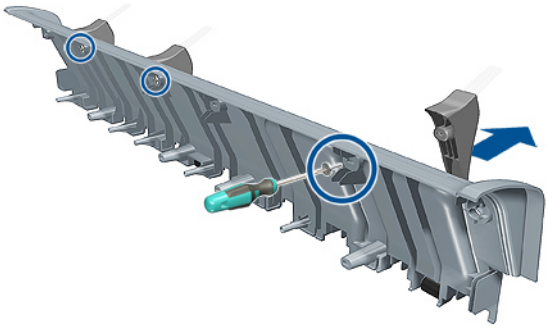

Right Cover

Removal

1. Switch off the product and remove the power cable.
2. Remove the Front Cover on page 349.
3. Remove the Converger on page 334.
4. Open the Right Ink Cartridge Door by inserting a screwdriver into the side to unlatch it, and then lift up the door.

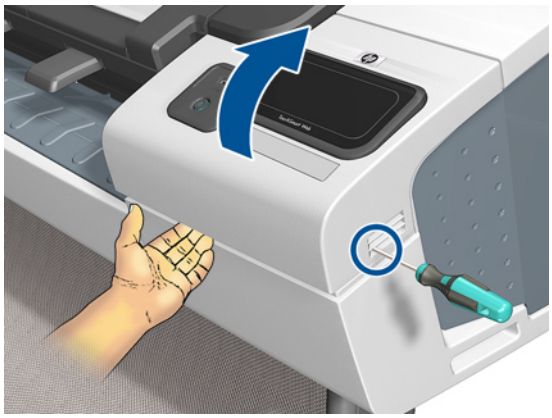

5. Open completely the right ink door so it stays up.

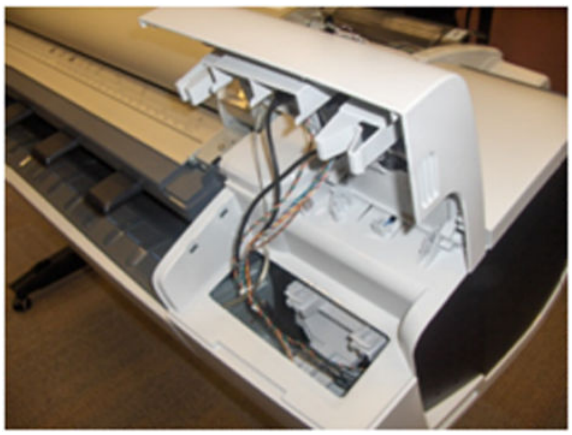

6. Remove one T-15 screw from the right ink door.

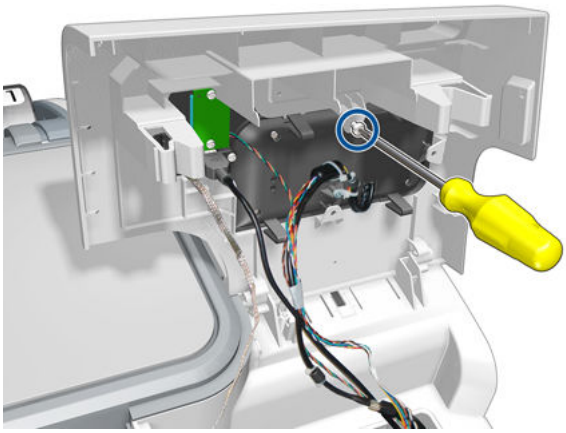

7. Pass the Touch Control Panel through the window of the ink door and place it on the features as shown in the picture.

8. Remove one T-15 screw that secures the Right Cover to the product (at the rear of the product).

9. Remove one T-15 screw that secures the Right Cover to the product (at the rear of the product).

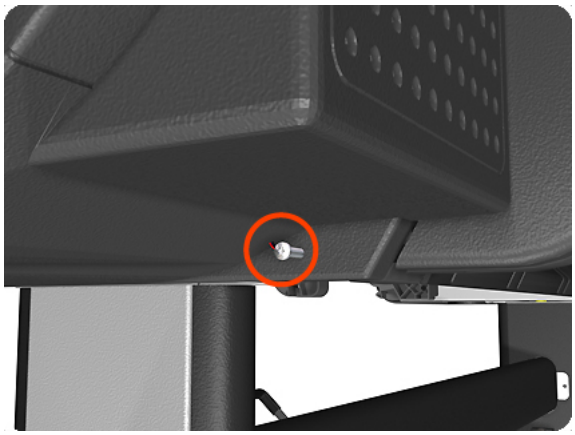

10. Remove one T-15 screw that secures the Right Cover to the product (at the rear of the product).

11. Remove one T-15 screw that secures the Right Cover to the product (accessible under the Front Cover).

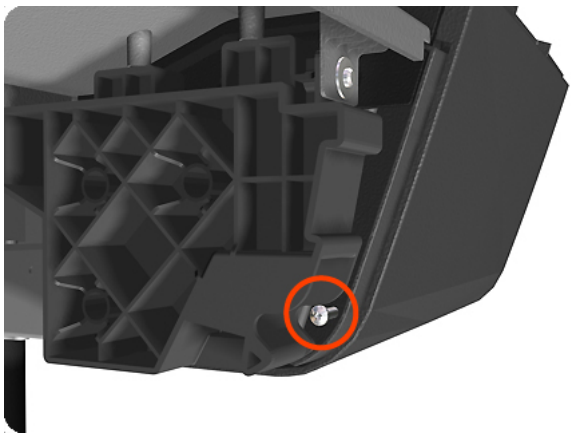

12. Remove one T-15 screw that secures the Right Cover to the product.

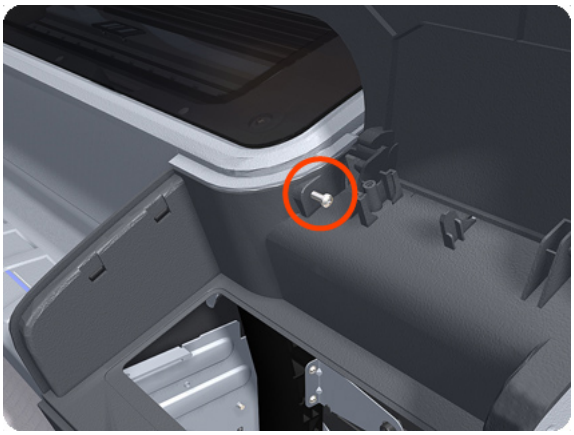

13. Unclip the Right Trim.

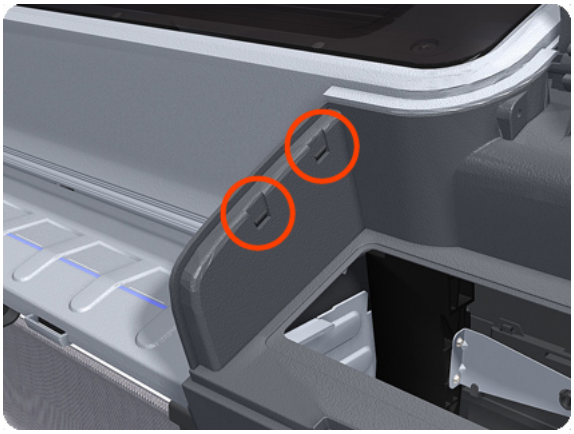

14. Remove the Right Cover from the product.

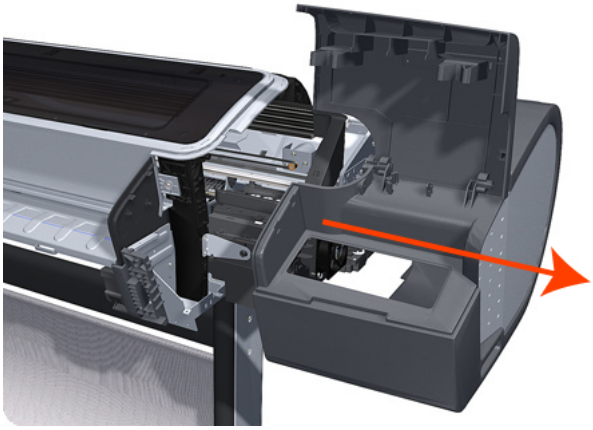

Right Scanner Cover (MFP only)

Removal

1. Switch off the product and remove the power cable.
2. Remove one T–10 screw that secures the front of the Right Scanner Cover.

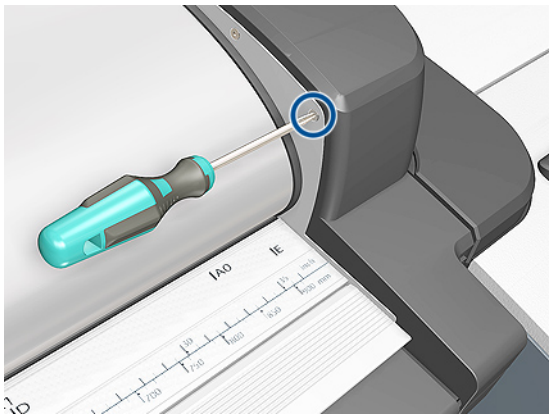

3. Unlatch the CIS.

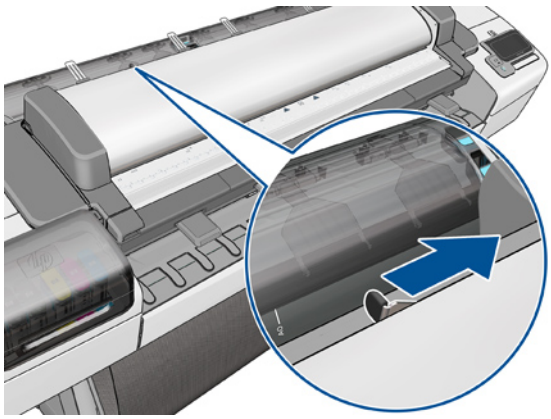

4. Open the CIS.

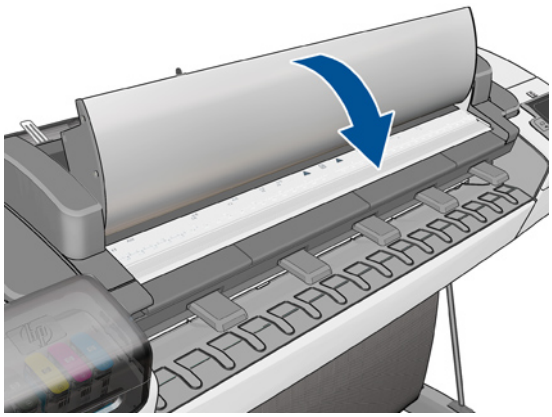

5. Remove three T-10 screws that secure the rear of the Right Scanner Cover.

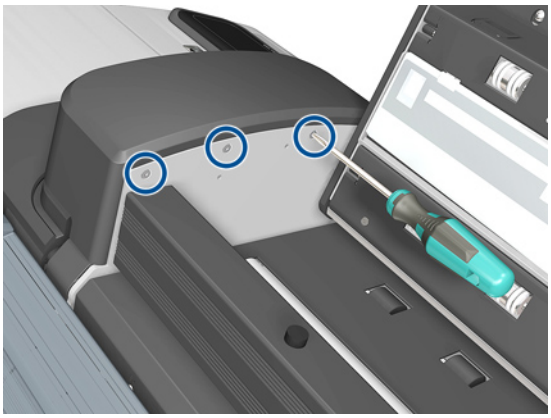

6. Open the latch of the Scanner.

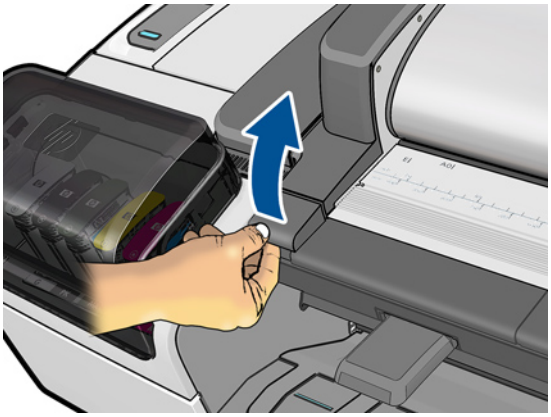

7. Open the Scanner.

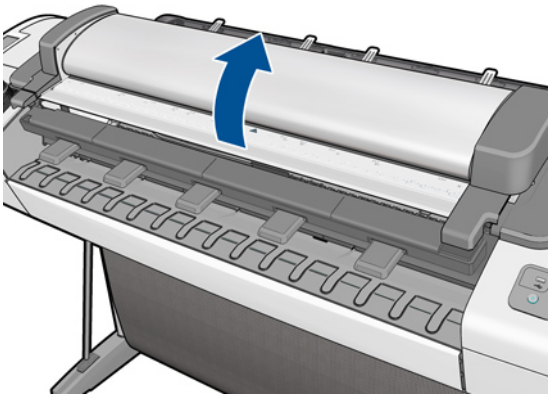

8. Remove one T-15 screw from below the Right Scanner Cover.

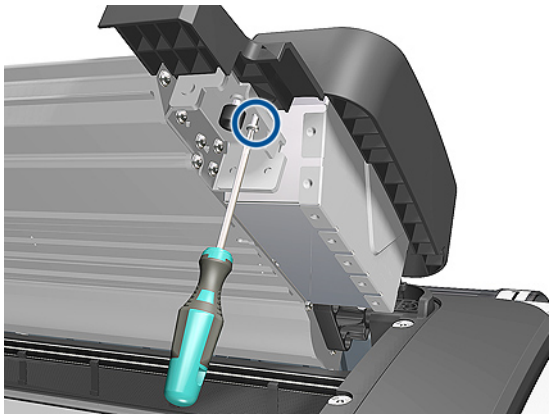

9. Remove the Right Scanner Cover.

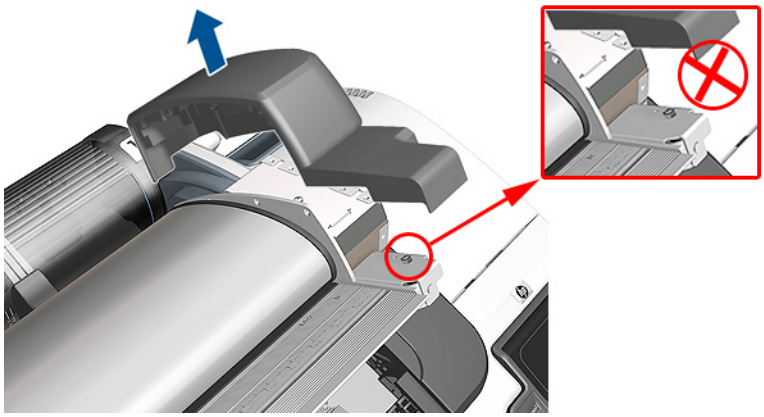

⚠ CAUTION: Do not unscrew the hexagonal nut from bumper assembly. If accidentally unscrewed refer to bumper adjustment in the installation procedure (see Scanner Bumper (MFP only) on page 339)

Roll Cover Bumpers, Lower

Removal and installation

1. Remove the lower roll cover.
2. Identify the bumpers at the rear of the product.

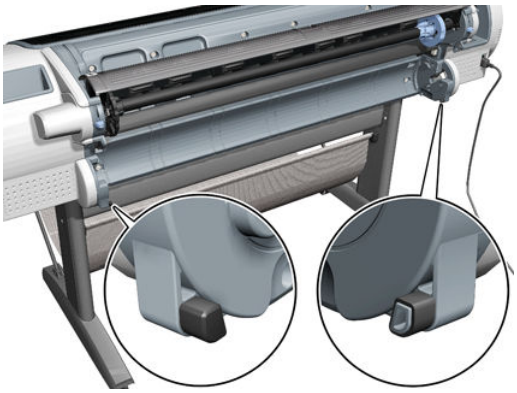

3. Use a screwdriver to lever off the bumper.

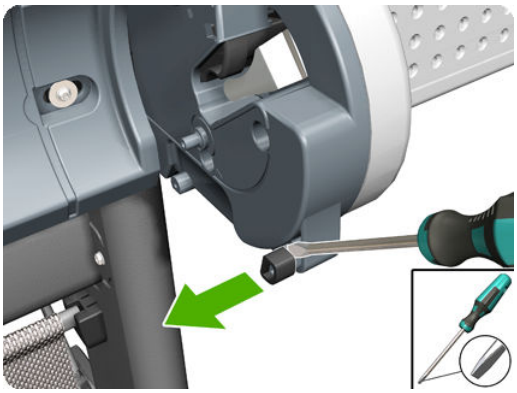

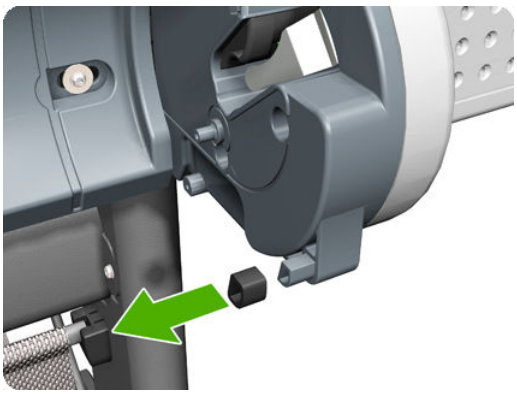

4. Remove the other bumper in the same way.

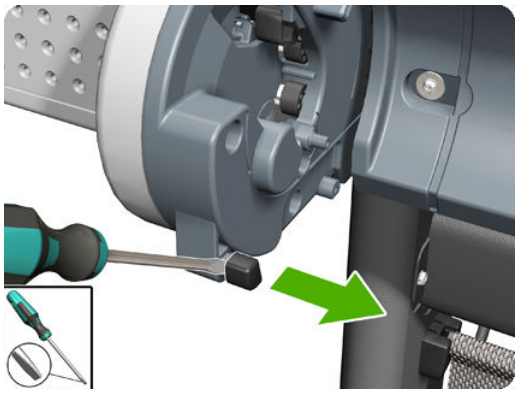

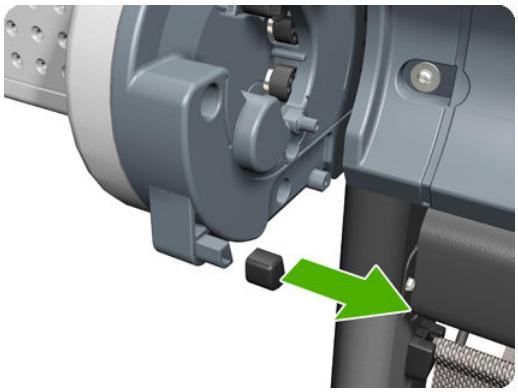

5. Locate the new bumpers.

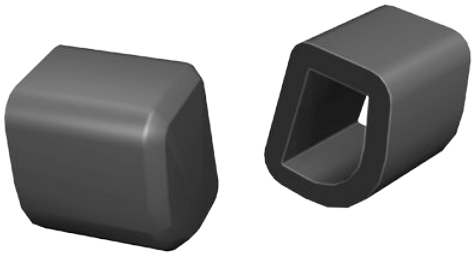

6. Fit the new bumpers into place.

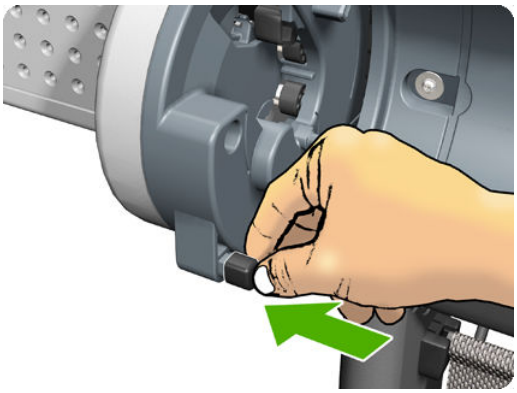

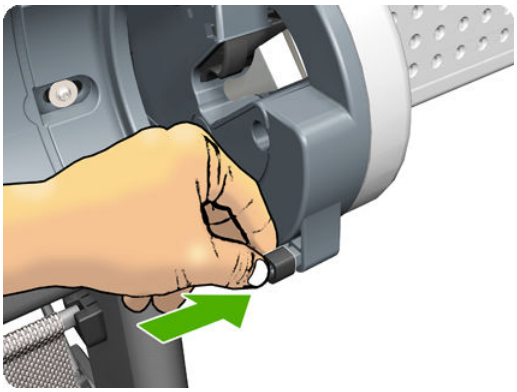

7. Replace the lower roll cover.

Roll Cover, Lower

Removal

1. Open the lower roll cover.

2. Remove the spindle.

3. Remove the screw connecting the roll cover to the product on the left.

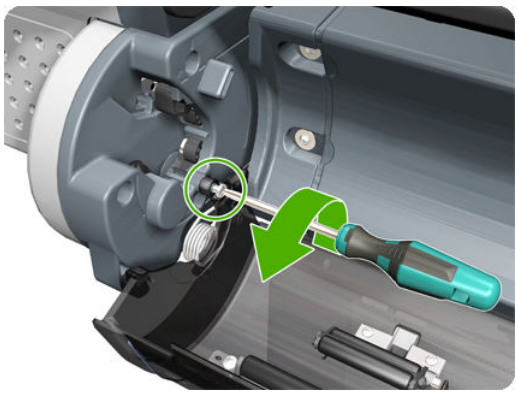

4. Remove the screw connecting the roll cover to the product on the right.

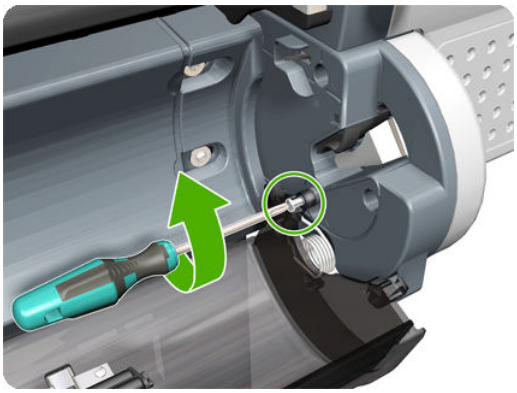

5. Detach the roll cover from the product on the left-hand side.

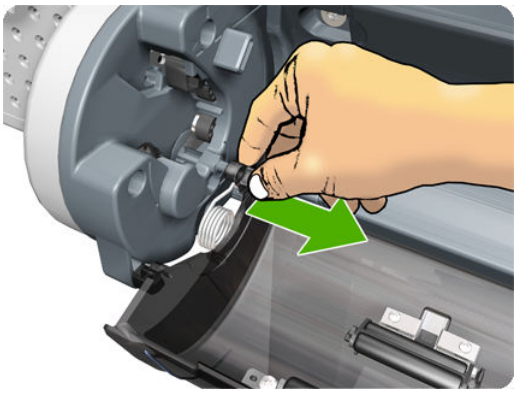

6. Leave the roll cover hanging from the bi-stable spring.

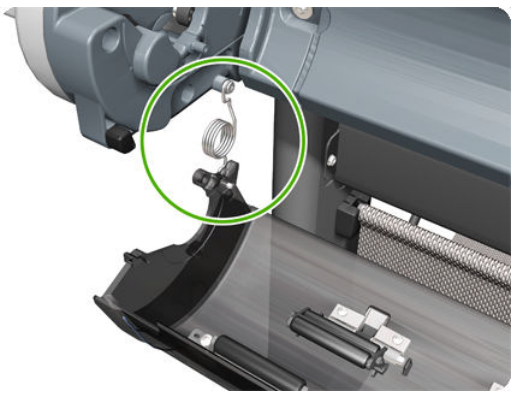

7. Detach the roll cover from the product on the right-hand side.

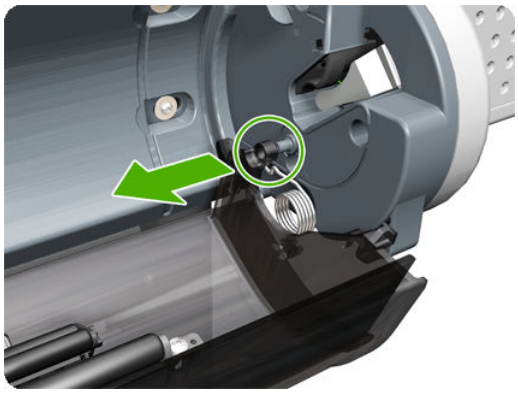

8. Leave the roll cover hanging from the bi-stable spring.

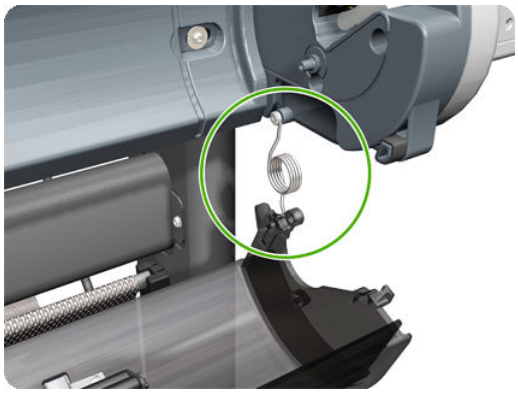

9. Both ends of the roll cover are now connected to the product only by the bi-stable springs.

10. Hold the roll cover with one hand while unscrewing the bi-stable spring from the product.

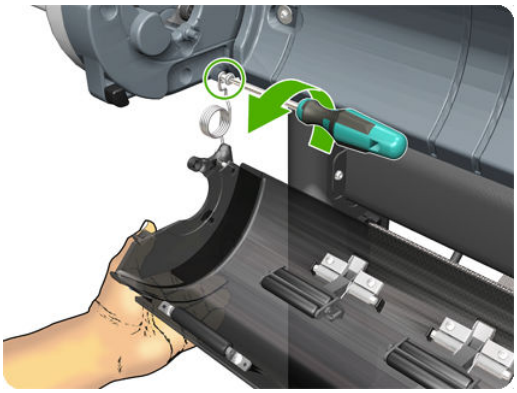

11. Leave one end of the roll cover resting on the floor.

12. Hold the roll cover with one hand while unscrewing the other bi-stable spring from the product.

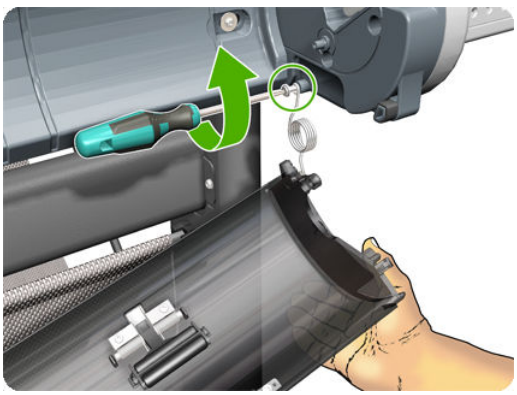

Roll Cover, Upper

Removal

1. Open the Upper Roll Cover.

2. Remove the screw on the Roll Cover's left side that attaches to the Upper Left Roll Support.

3. Remove the screw on the Roll Cover's right side that attaches to the Upper Right Roll Support.

4. Remove the Roll Cover hinge from the Roll Left Support Pin.

5. Remove the Roll Cover hinge from the Roll Right Support Pin.

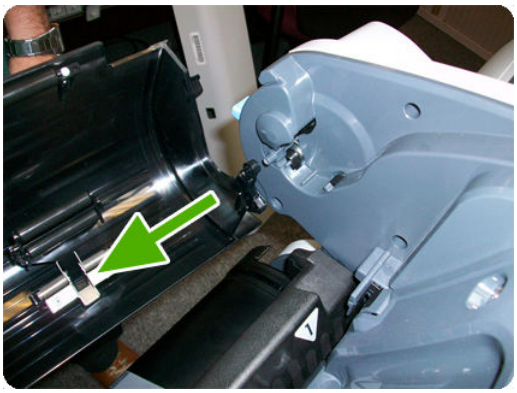

Left Roll Guide

Removal

1. Switch off the product and remove the power cable.
2. Remove the Spindle on page 502.
3. Remove the Roll Cover, Lower on page 473.
4. Remove the Converger on page 334.
5. Remove the Cleanout on page 328.
6. Remove five T-20 screws that secure the Left Roll Guide to the product.

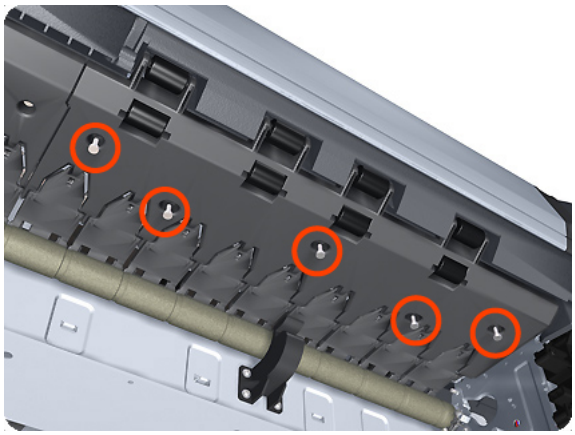

7. Lower the left end and remove the Left Roll Guide from the product.

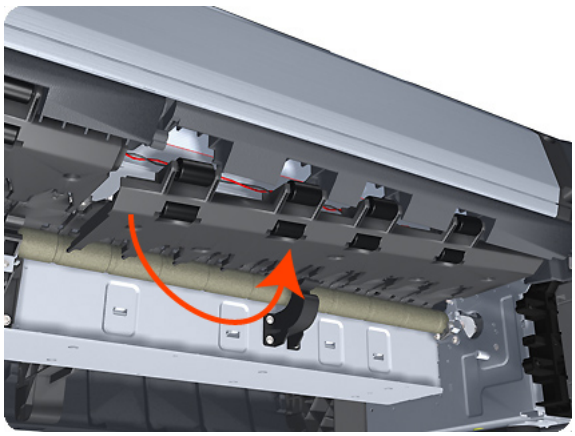

NOTE: When you finish installing or replacing this component, you must perform the necessary Service Calibrations. To find which calibrations you must perform, see Service Calibration Guide to Removal and Installation on page 267.

Right Roll Guide

Removal

1. Switch off the product and remove the power cable.
2. Remove the Left Roll Guide on page 479.
3. Remove seven T-20 screws that secure the Right Roll Guide to the product.

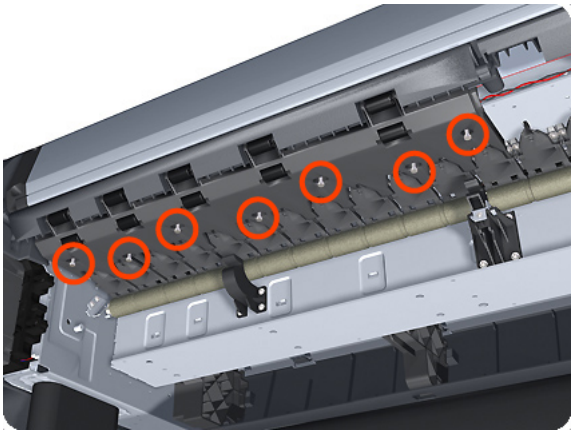

4. Lower the right end and remove the Right Roll Guide from the product.

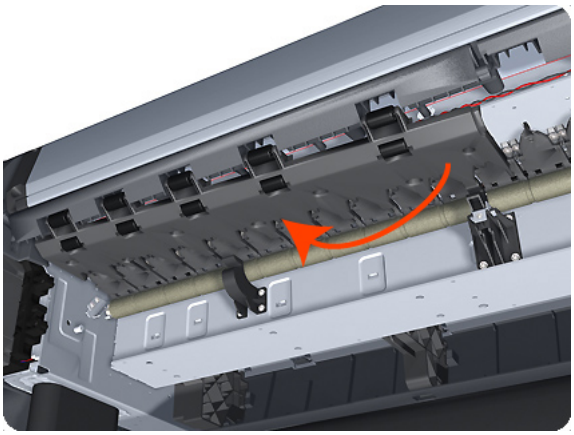

NOTE: When you finish installing or replacing this component, you must perform the necessary Service Calibrations. To find which calibrations you must perform, see Service Calibration Guide to Removal and Installation on page 267.

Roll Support, Lower Left

Removal

1. Remove the Converger on page 334.
2. Remove the Roll Cover, Lower on page 473.
3. Remove the Rear Cover on page 460.
4. Remove the Rear Cover (MFP only) on page 457.
5. Remove the Roll Support, Upper Left on page 487.
6. Remove screws as shown.

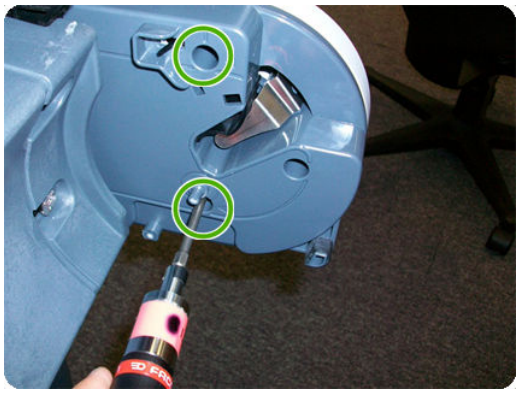

7. Disconnect the cable connector as shown.

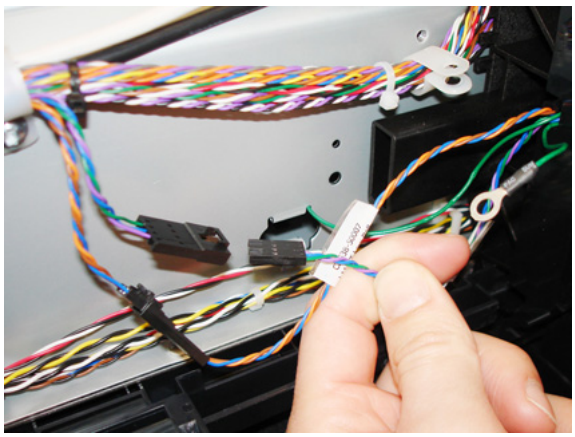

8. Remove the Lower Left Roll Support, taking care not to damage the cables.

Roll Support, Lower Right

Removal

1. Remove the Right Cover on page 463.
2. Remove the Roll Cover, Lower on page 473.
3. Unplug the motor encoder cable.

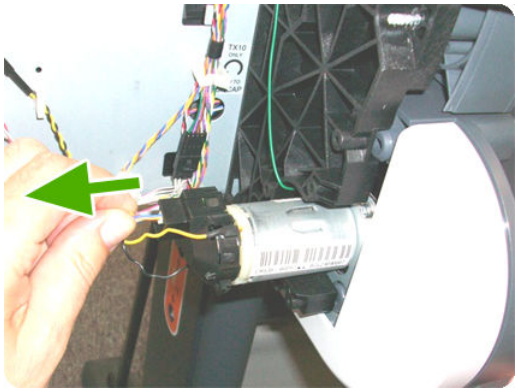

4. Unplug the motor cable.

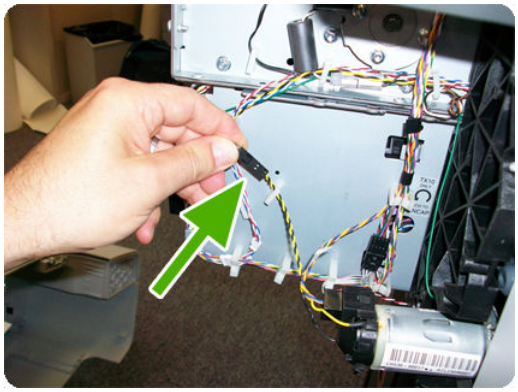

5. Remove the T-15 screw of the grounding cable.

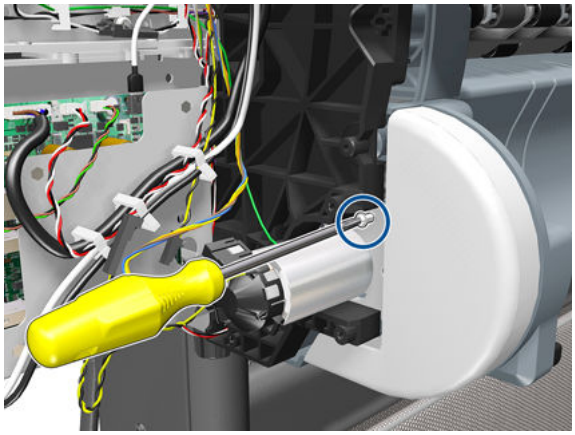

6. Remove two T-15 screws as shown.

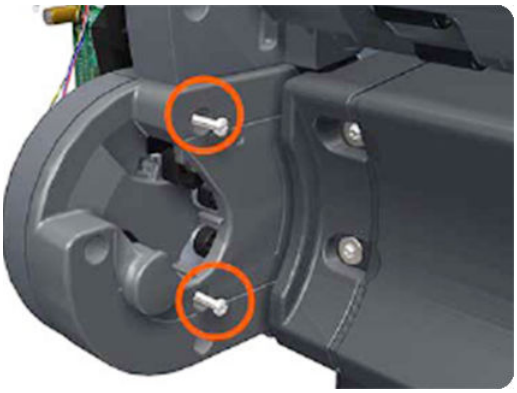

7. Pull out the Lower Right Roll Support from the printer and remove the grounding cable.

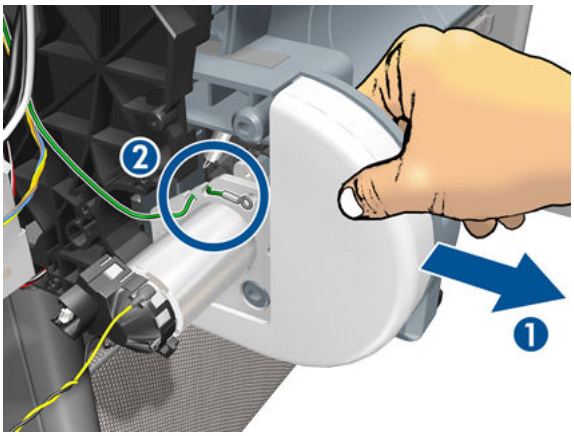

8. Remove the Lower Right Roll Support.

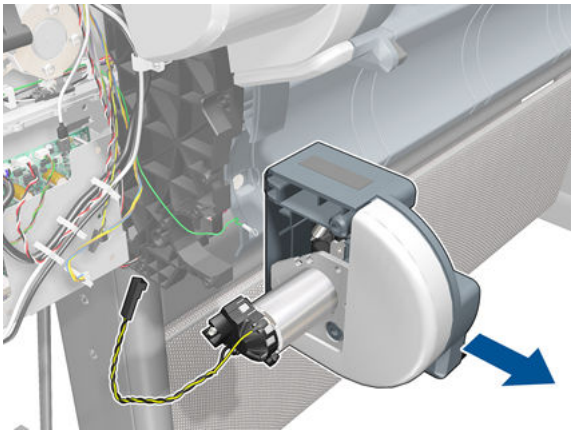

Roll Support Sensor, Lower Left

Removal

1. Remove the Roll Support, Lower Left on page 481.
2. Unscrew the screw as shown.

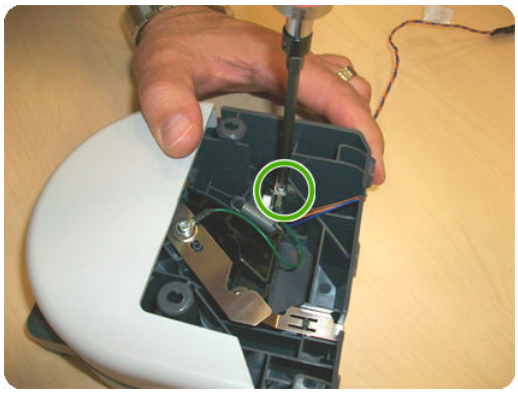

3. Remove the cable.

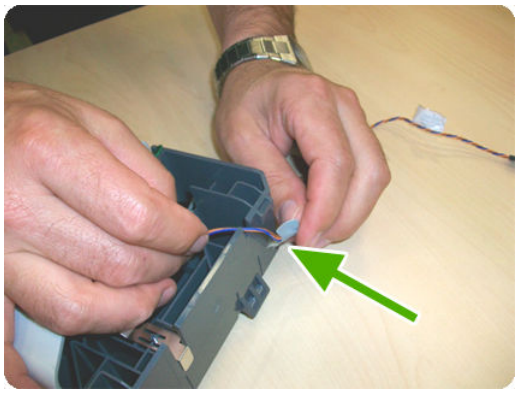

4. The sensor has been removed.

Roll Support Sensor, Upper Left

Removal

1. Remove the Roll Support, Upper Left on page 487.
2. Unscrew the screw as shown.

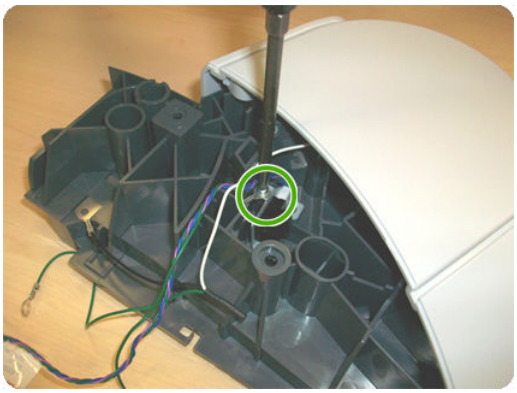

3. Remove the sensor.

Roll Support, Upper Left

Removal

1. Remove the Roll Cover, Upper on page 477.
2. Remove the Converger on page 334.
3. Remove the Rear Cover on page 460.
4. Remove the Rear Cover (MFP only) on page 457.
5. Remove the two T–15 screws as shown.

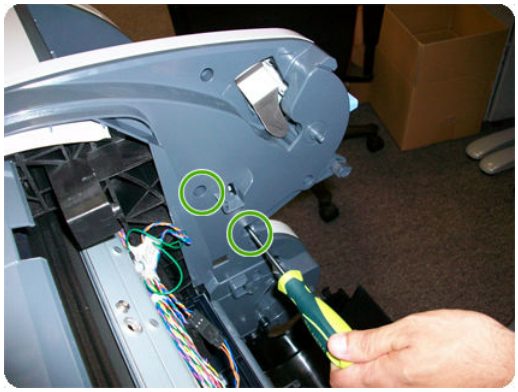

6. Remove the T–20 screw as shown.

7. Unplug the Upper Left Roll Support, taking care not to damage the cables. Detach all cables from the Roll Support.

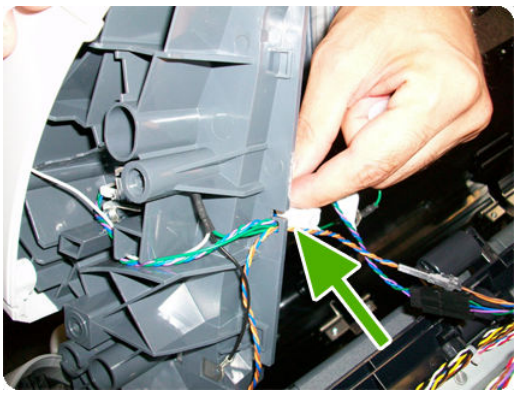

8. Disconnect the cable connector as shown.

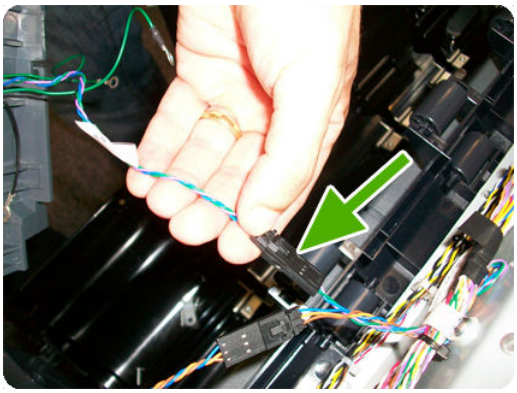

9. Remove the Upper Left Roll Support.

Roll Support, Upper Right

Removal

1. Remove the Converger on page 334.
2. Remove the Roll Cover, Upper on page 477.
3. Remove the Rear Cover on page 460.
4. Remove the Rear Cover (MFP only) on page 457.
5. Remove two T-15 screws.

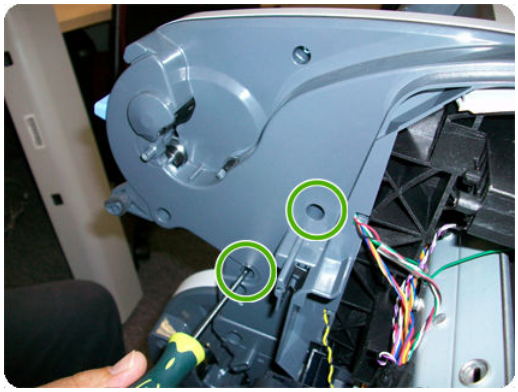

6. Remove one T-20 screws.

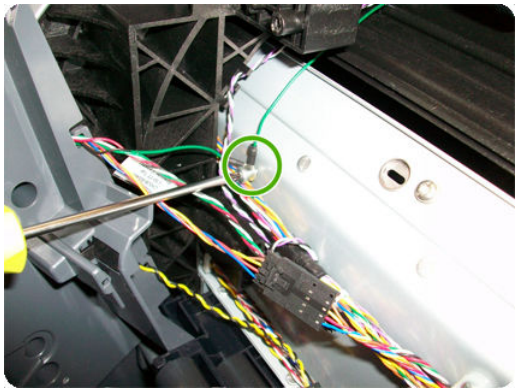

7. Unplug the Upper Right Roll Support, taking care not to damage the cables. Detach all cables from the Roll Support.

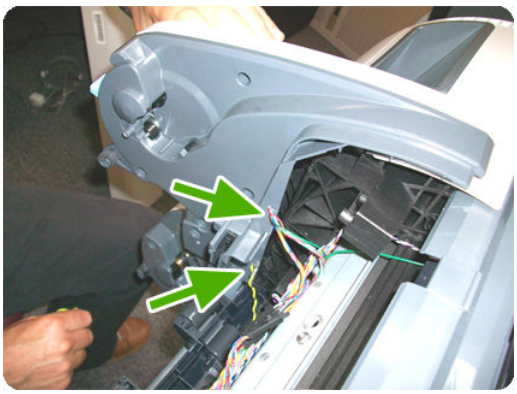

8. Important disconnect three connectors.

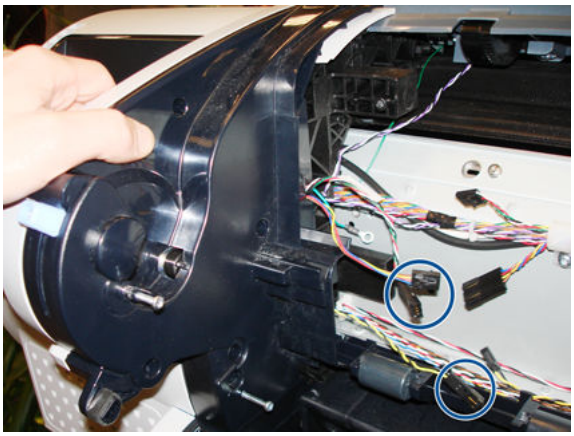

9. Remove the Upper Right Roll Support.

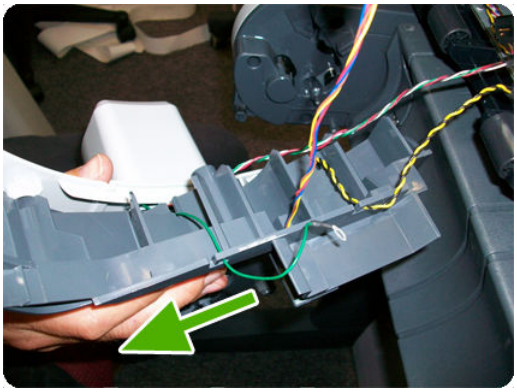

Scan-axis Motor

Removal

1. Switch off the product and remove the power cable.
2. Remove the Right Cover on page 463.
3. Remove the Left Cover on page 403.
4. Loosen the T-10 uncapping screw sufficiently so you can move the Carriage Assembly manually.

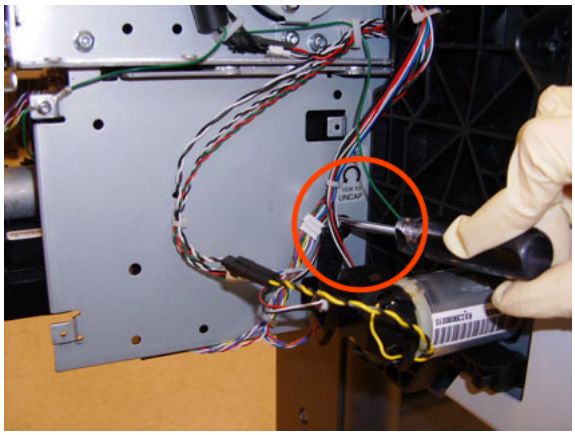

5. Push the Carriage Assembly into the print path.

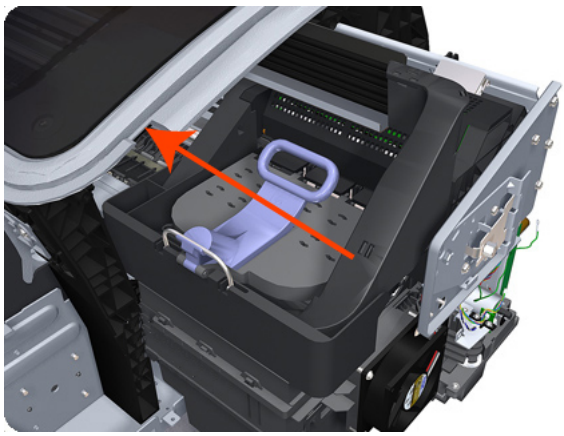

6. Loosen the T-20 screw Belt Tensioner to the product to remove the tension from the belt.

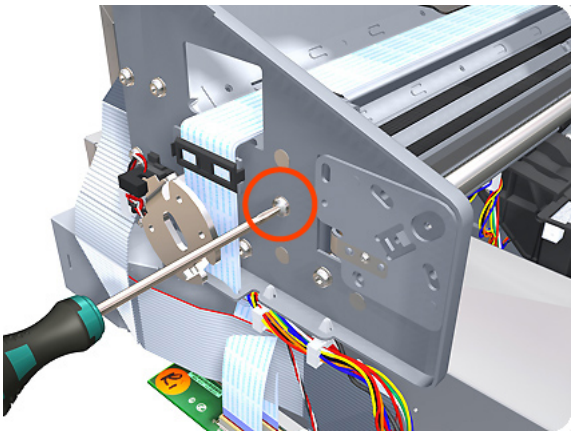

7. Leave the Belt Tensioner in place.

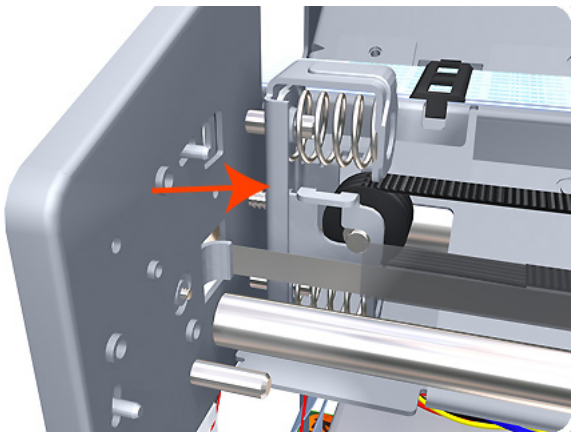

8. Remove the Belt Assembly from the drive wheel of the Scan-Axis Motor.

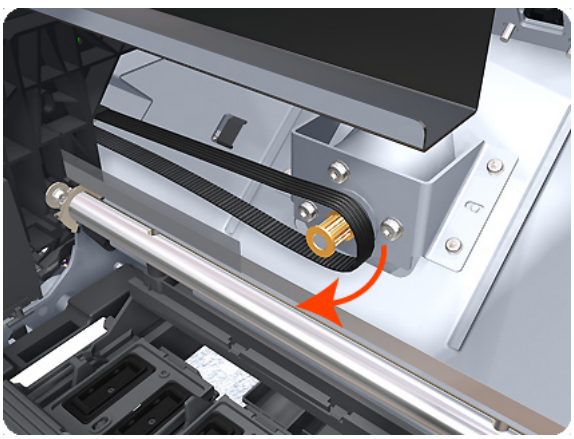

9. Remove three T-20 screws that secure the Scan-Axis Motor to the product.

10. Unroute the Scan-Axis Motor supply cable from the cable clamp.

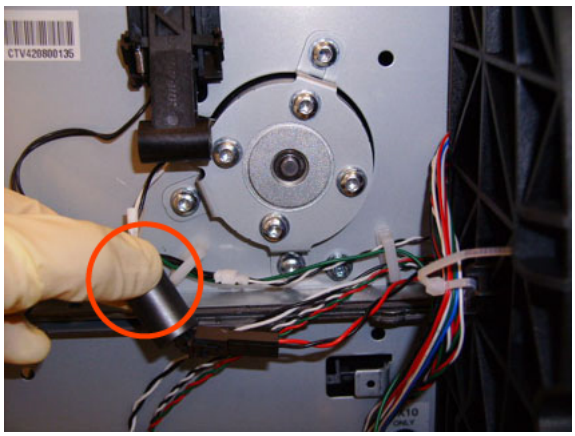

11. Disconnect the Scan-Axis Motor supply connector from the L1 Harness.

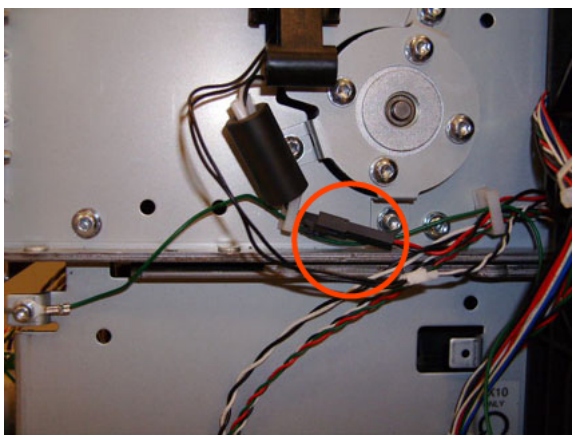

12. Remove three T-20 screws that secure the Scan-Axis Motor to the product.

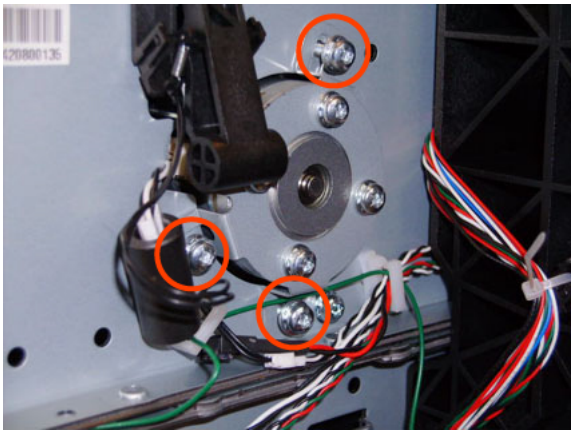

13. Carefully pull the Scan-Axis Motor out of the product (10 mm) until you can rotate it approximately 30 degrees counterclockwise.

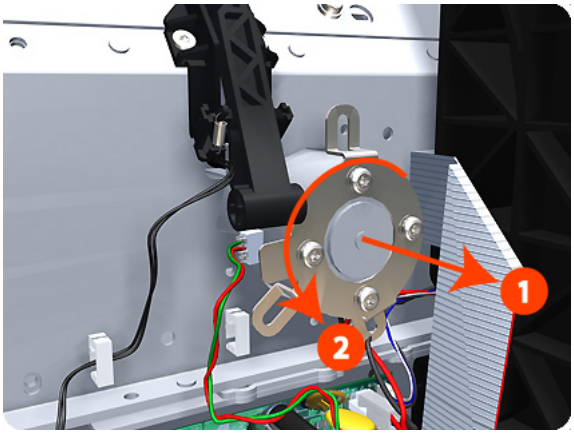

14. Remove the Scan-Axis Motor from the product.

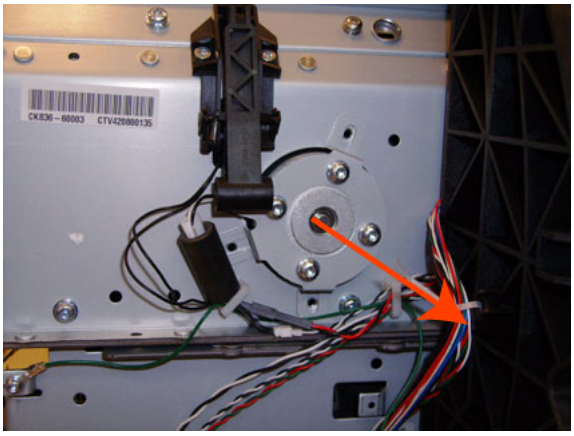

NOTE: When you finish installing or replacing this component, you must perform the necessary Service Calibrations. To find which calibrations you must perform, see Service Calibration Guide to Removal and Installation on page 267.

Service Station

NOTE: The Service Station repair kit does not include the Touch Control Panel Holder nor the Cable holder under the primer. These parts need to be re-used from the product when replacing the Service Station.

Removal

1. Switch off the product and remove the power cable.
2. Remove the Right Cover on page 463.

   NOTE: On the HP Designet Z2600ps, Z5400ps, Z5600ps Printer Series, remove the Aerosol Fan cable.

3. Disconnect and remove the following cables indicated from the Intermediate PCA.

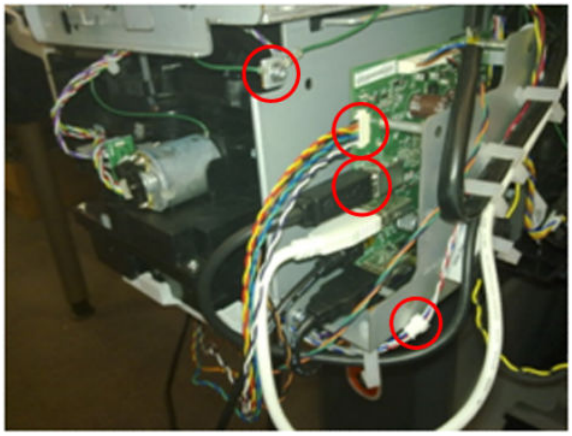

4. Disconnect and remove the following cables indicated from the Primer of the Service Station.

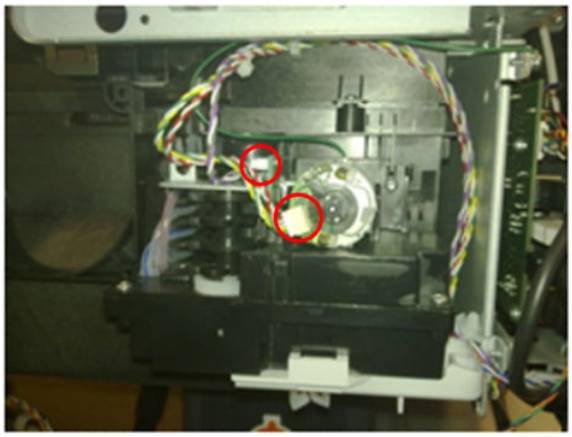

5. Remove the Touch Control Panel from the holder and leave it carefully hanging as shown in the picture.

6. Remove the Touch Control Panel cable from the cable tie.

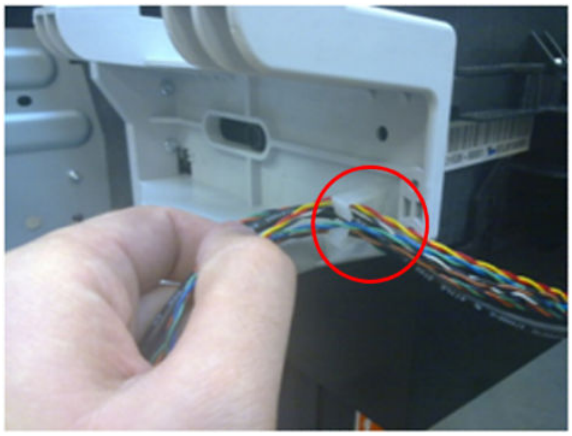

7. Remove the cable tie by removing the screw indicated.

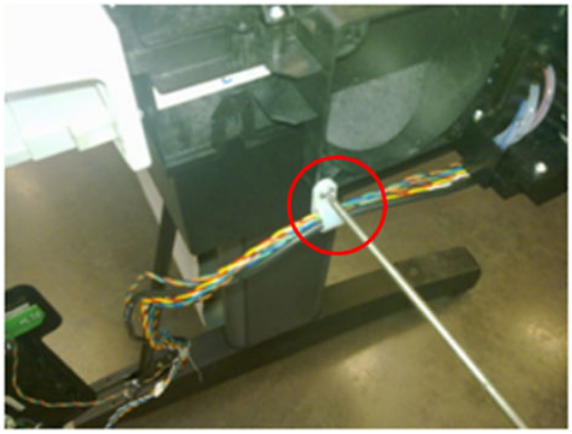

8. Remove the cables indicated from the cable ties.

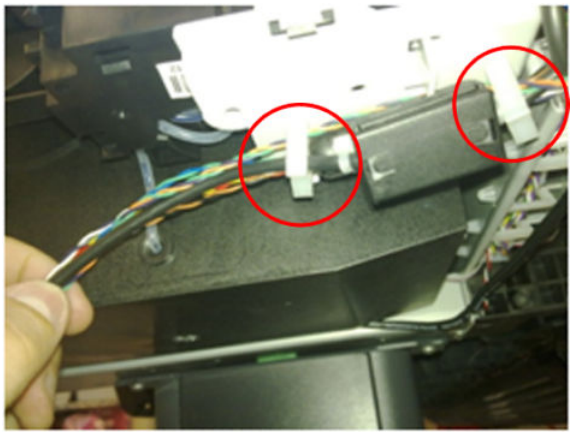

9. Remove both screws from the Touch Control Panel Holder (do not discard them as the parts will be reused).

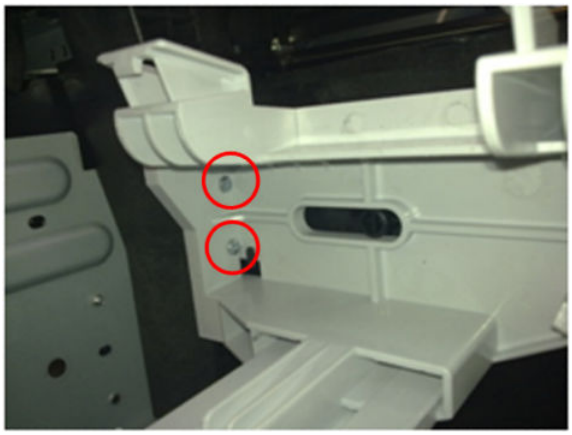

10. Unclip the cable holder from underneath the primer (do not discard it as the part will be reused).

11. Loosen the T-10 uncapping screw enough so that you can move the Carriage Assembly manually.

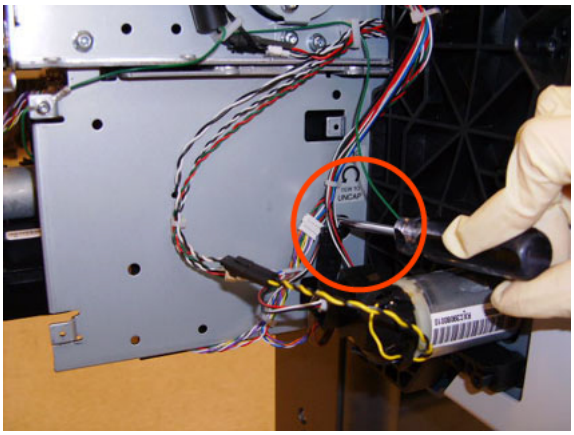

12. Push the Carriage Assembly into the print path to gain access to two T-10 screws that secure the Service Station to the Carriage Rail.

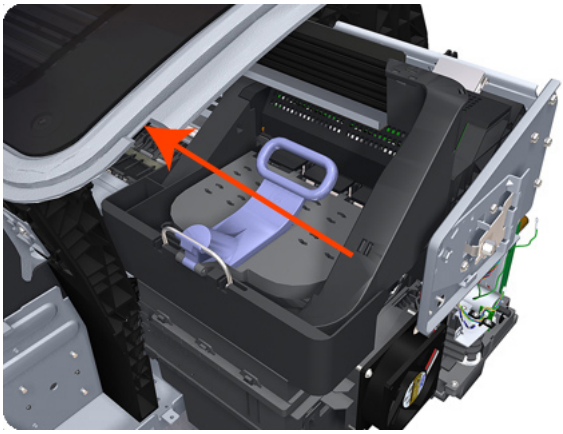

13. Remove the two Allen T-8 screws that secure the Service Station to the Carriage Rail. To avoid damaging the Encoder Strip, you can use a standard screwdriver.

NOTE: Support the Service Station so that it does not fall when you remove the attachment screws.

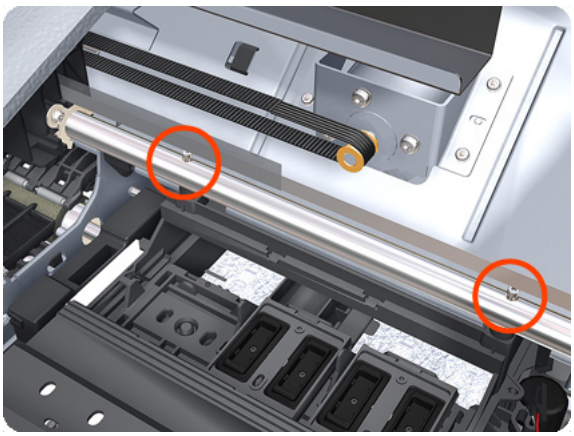

14. Lower the Service Station until you can slide it carefully from the product.

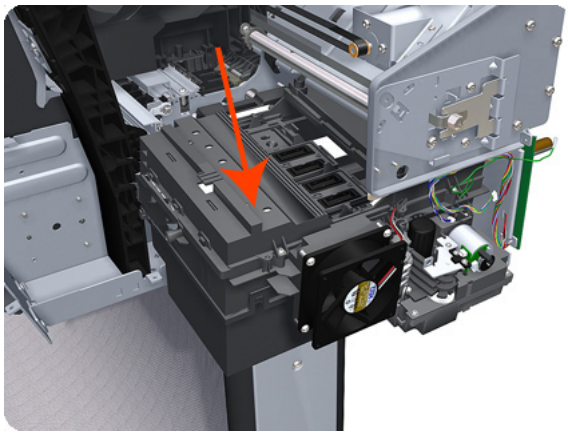

15. Carefully slide the Service Station from the product.

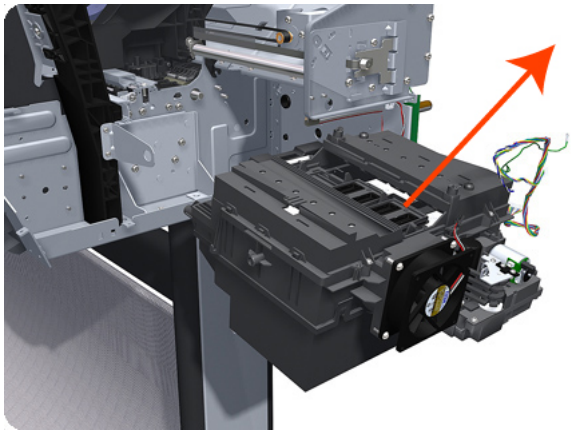

NOTE: When you finish installing or replacing this component, you must perform the necessary Service Calibrations. To find which calibrations you must perform, see Service Calibration Guide to Removal and Installation on page 267.

Single-sheet Sensor

Removal

1. Remove the Roll Support, Upper Right on page 489.
2. Disengage the cable.

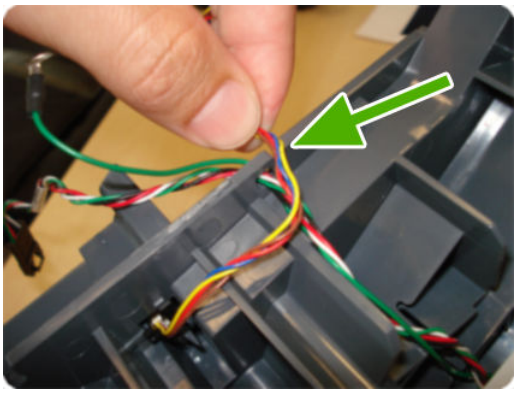

3. Push down the clip that holds the Siva sensor (you can use a screwdriver).

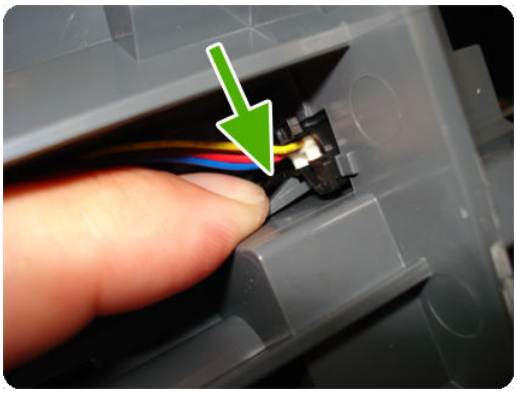

4. Pull out the sensor.

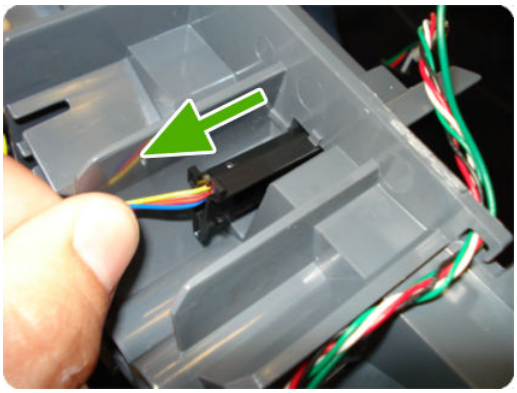

5. The sensor has been removed.

Spindle

Removal

1. Open the roll cover.
2. Remove the black end of the spindle from the product, then the blue end.

CAUTION: Be sure to remove the black end first. Removing the blue end first could damage the black end.

CAUTION: Do not insert your fingers into the spindle supports during the removal process.

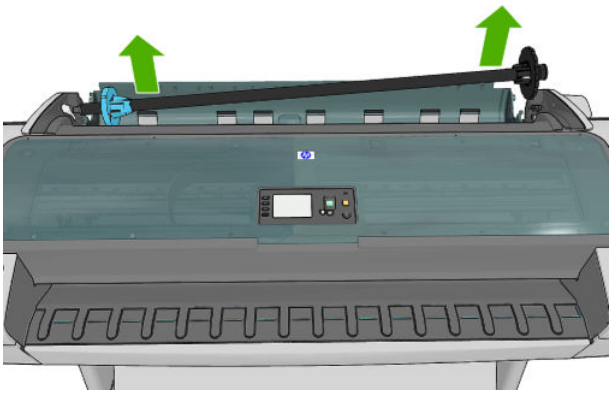

Spittoon, Left

Removal

This procedure describes how to remove the complete Left Spittoon which is necessary to gain access to other components.

NOTE: Switch off the product and remove the power cable.

1. Remove the Left Cover on page 403.
2. Remove the EE Box on page 359.
3. Remove two T-20 screws that secure the Left Spittoon to the product.

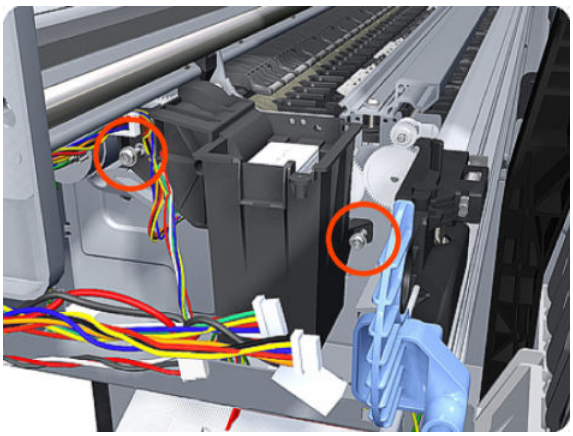

4. Remove one T-8 screw that secures the Left Spittoon to the product.

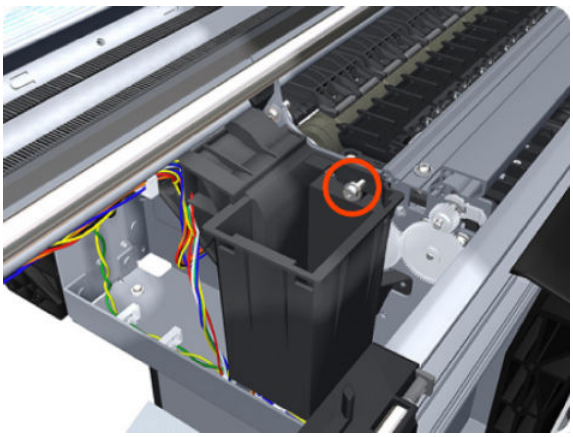

5. Rotate the Left Spittoon clockwise approximately 45 degrees and carefully lift it out of the product.

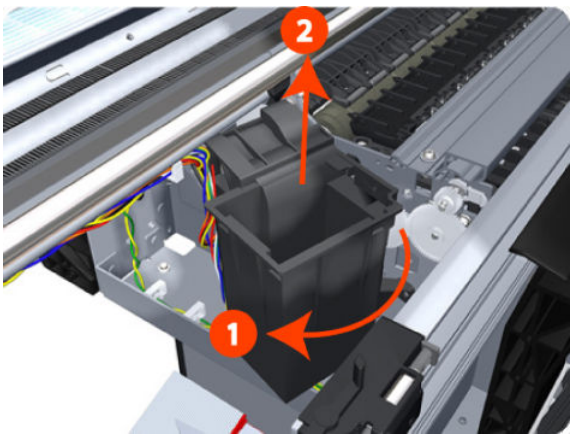

Starwheel Assembly

Removal

1. Switch off the product and remove the power cable.
2. Open the Scanner (MFP only) or Window.

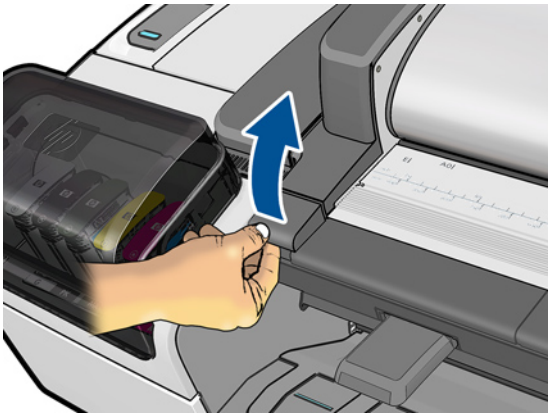

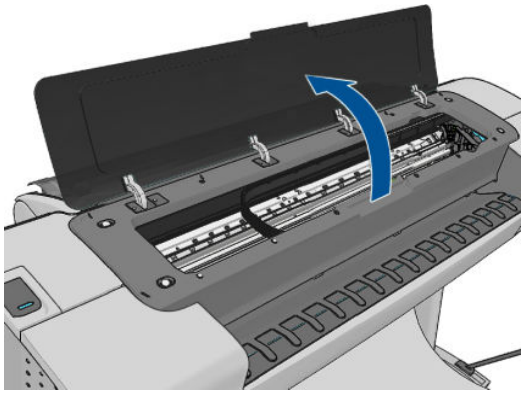

3. Remove one T-10 screw that secures the Starwheel Assembly to the product. Use a short screw driver as this will allow the best access.

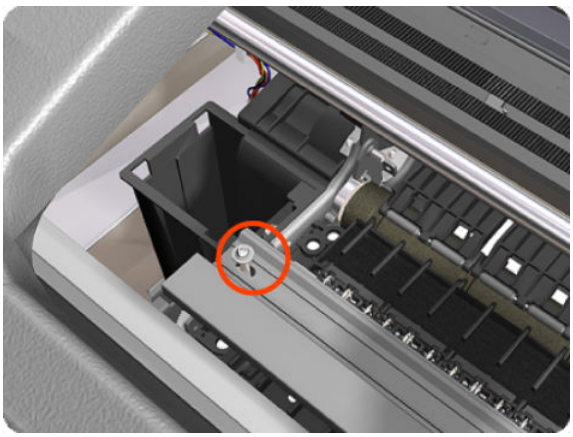

4. Remove another T-10 screw that secures the Starwheel Assembly to the product.

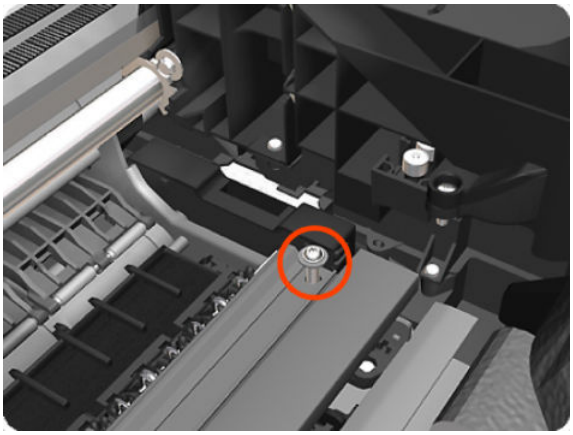

5. Carefully lift the Starwheel Assembly out of the product.

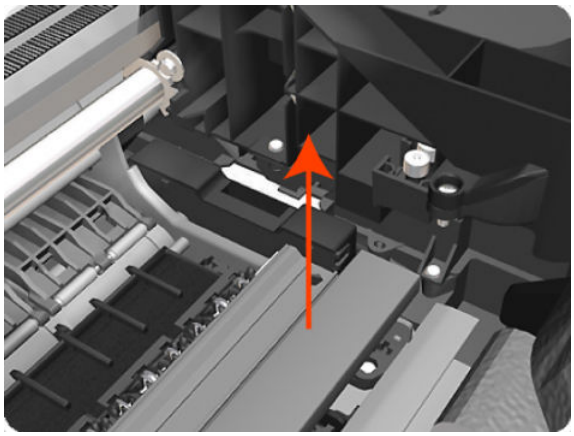

NOTE: When you finish installing or replacing this component, you must perform the necessary Service Calibrations. To find which calibrations you must perform, see Service Calibration Guide to Removal and Installation on page 267.

Starwheel Lifter, Left

Removal

1. Switch off the product and remove the power cable.
2. Remove the Front Cover on page 349.
3. Remove the Left Cover on page 403.
4. Remove the EE Box on page 359.
5. Remove the Spittoon, Left on page 503.
6. Remove the Starwheel Assembly on page 504.
7. Remove two T-8 screws that secure the Left Starwheel Lifter to the product.

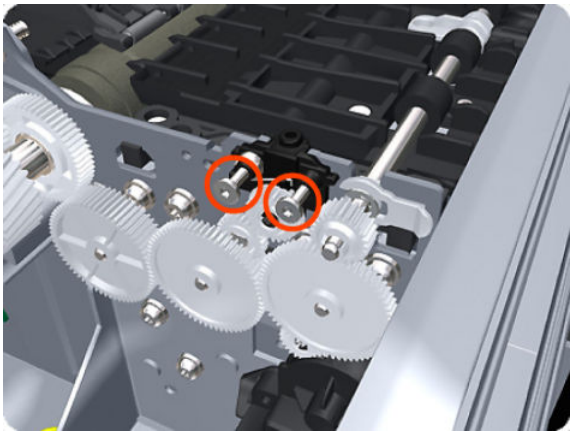

8. Rotate the Left Starwheel Lifter sufficiently to disengage the right attachment lug.

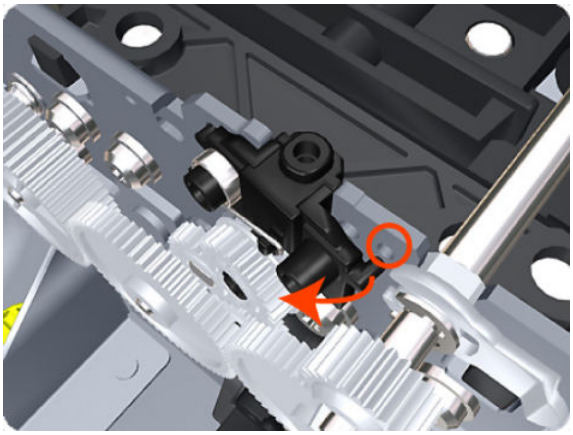

9. Tilt the Left Starwheel Lifter sufficiently to disengage the left attachment lug.

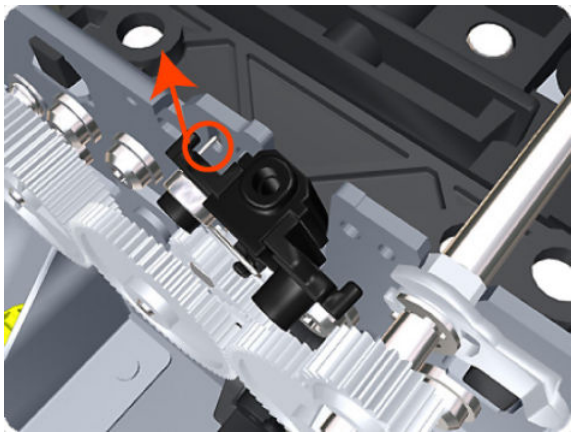

10. Remove the Left Starwheel Lifter from the product.

NOTE: Do **not** remove the spring from the Left Starwheel Lifter, because it is difficult to reattach.

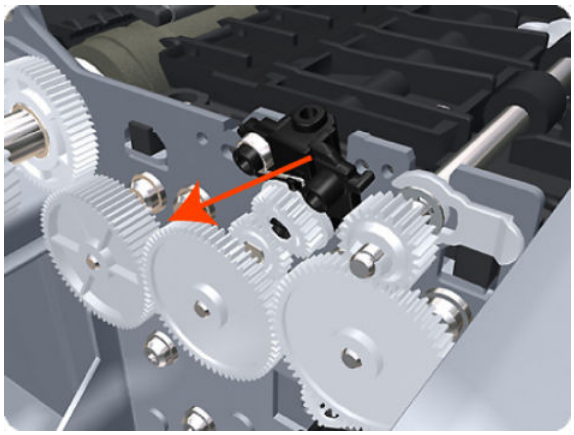

NOTE: When you finish installing or replacing this component, you must perform the necessary Service Calibrations. To find which calibrations you must perform, see Service Calibration Guide to Removal and Installation on page 267.

Starwheel Lifter, Right

Removal

1. Switch off the product and remove the power cable.
2. Remove the Right Cover on page 463.
3. Remove the Starwheel Assembly on page 504.
4. Loosen the T-10 uncapping screw sufficiently so you can manually move the Carriage Assembly in step 8.

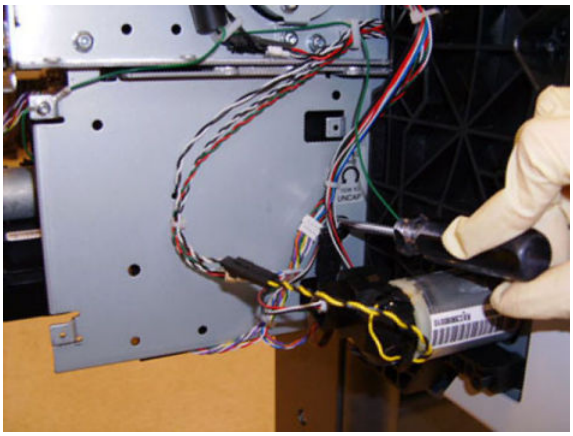

5. Push the Carriage Assembly into the print path.

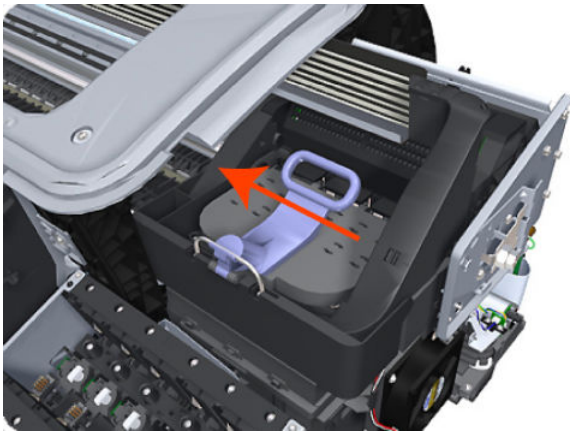

6. Remove one T-10 screw that secures the Drop Detector to the Service Station.

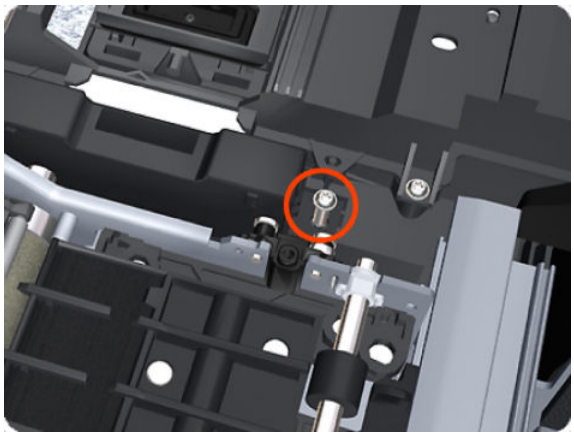

7. Rotate the Drop Detector vertically to gain access to the two screws that secure the Right Starwheel Lifter.

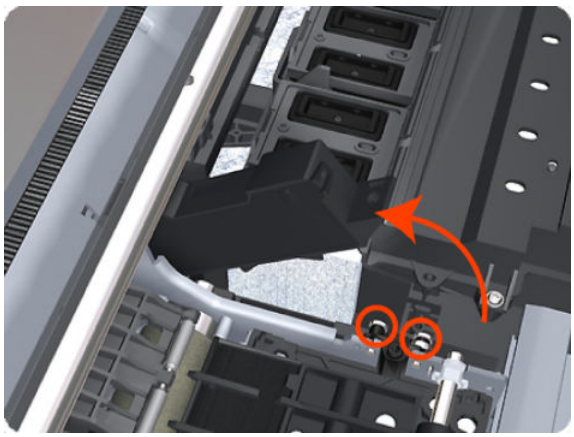

8. Remove two T-8 screws that secure the Right Starwheel Lifter to the product.

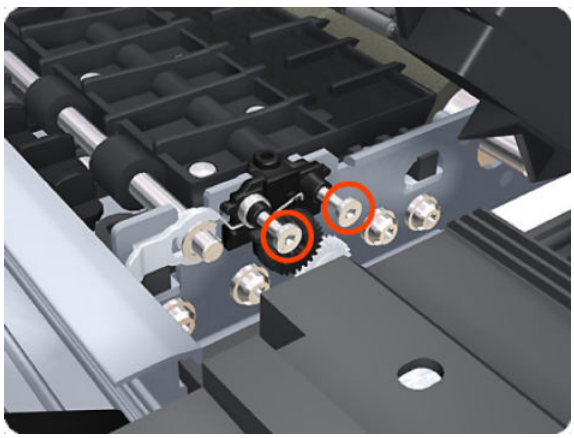

9. Rotate the Right Starwheel Lifter sufficiently to disengage the right attachment lug.

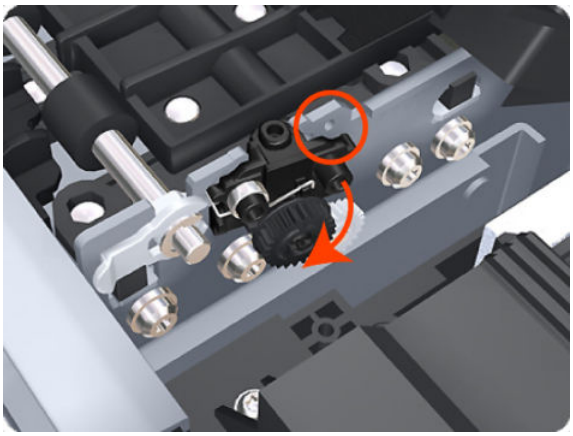

10. Tilt the Right Starwheel Lifter sufficiently to disengage the left attachment lug.

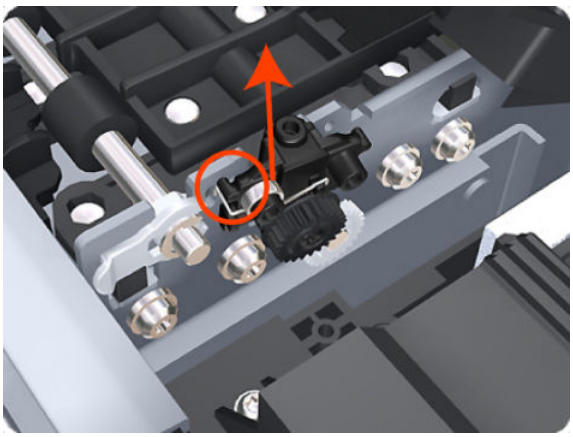

11. Remove the Right Starwheel Lifter from the product.

NOTE: Do **not** remove the spring from the Right Starwheel Lifter, because it is difficult to reattach.

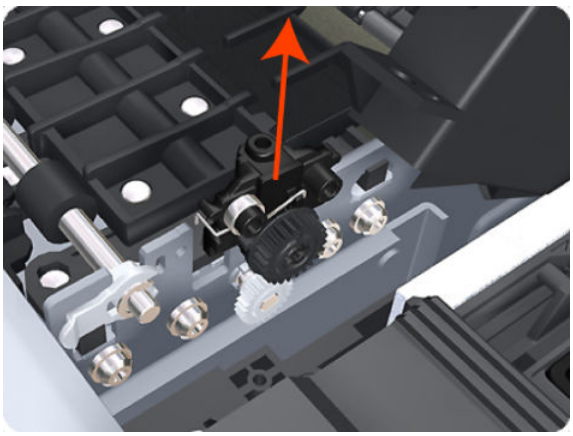

NOTE: When you finish installing or replacing this component, you must perform the necessary Service Calibrations. To find which calibrations you must perform, see Service Calibration Guide to Removal and Installation on page 267.

Starwheel Motor

Removal

1. Switch off the product and remove the power cable.
2. Remove the Front Cover on page 349.
3. Remove the Left Cover on page 403.
4. Remove the EE Box on page 359.
5. Remove the Spittoon, Left on page 503.
6. Disconnect the Starwheel Motor electrical connector.

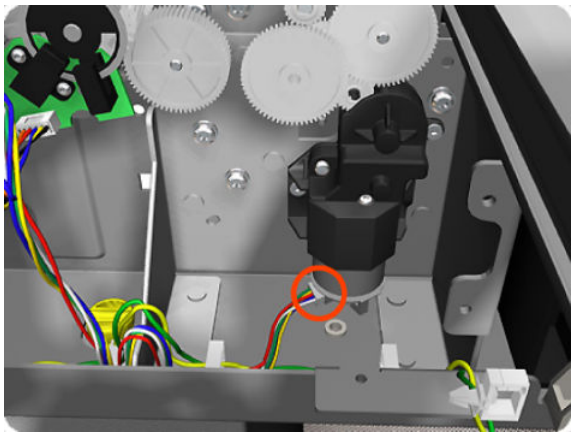

7. Carefully pull the two gear wheels off their shafts to gain access to the Starwheel Motor attachment screws.

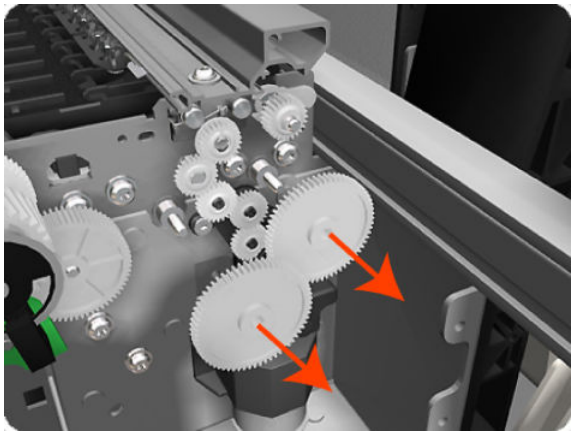

8. Remove three T-8 screws that secure the Starwheel Motor to the product.

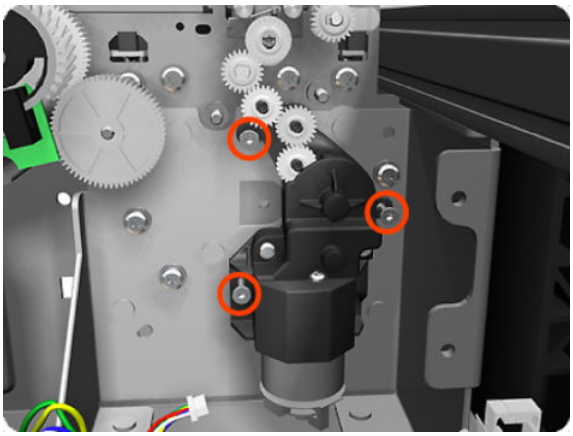

9. Lift the Starwheel Motor out of the product.

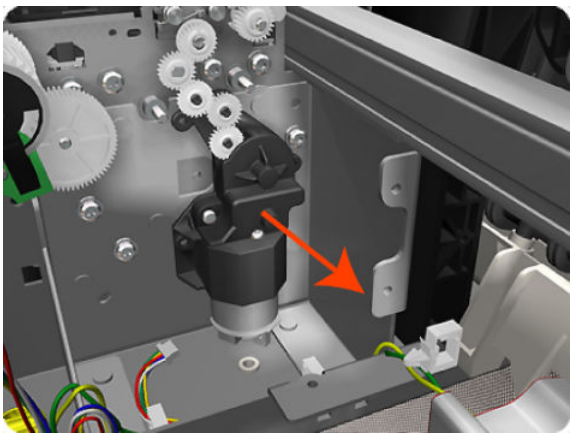

NOTE: When you finish installing or replacing this component, you must perform the necessary Service Calibrations. To find which calibrations you must perform, see Service Calibration Guide to Removal and Installation on page 267.

Wall Spacers

Removal

The illustrations show the removal of the Right Wall Spacer; the procedure is the same for the Left Wall Spacer.

1. Remove a screw.

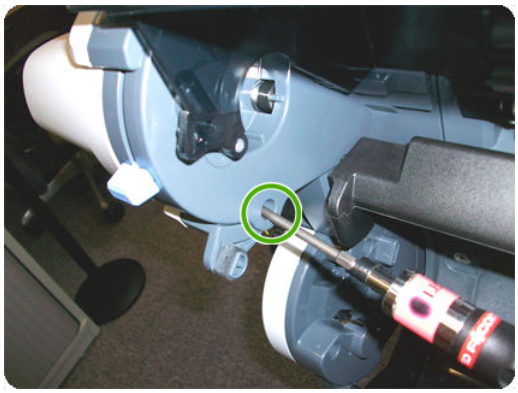

2. Open the Upper Roll Cover.

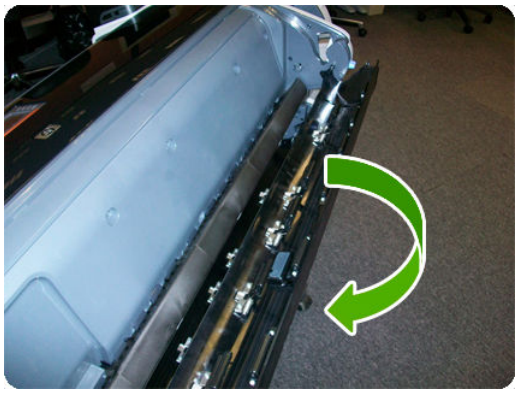

3. Remove a screw.

4. Remove the Upper Roll Cover Support.

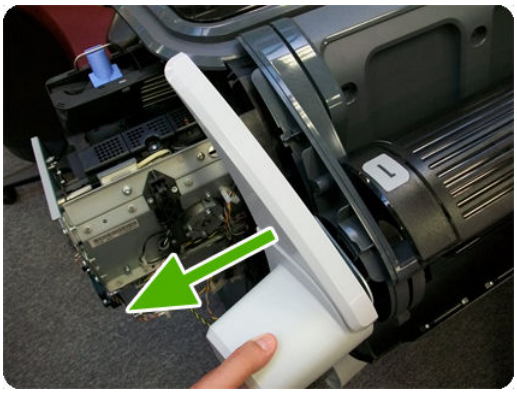

5. Remove a screw.

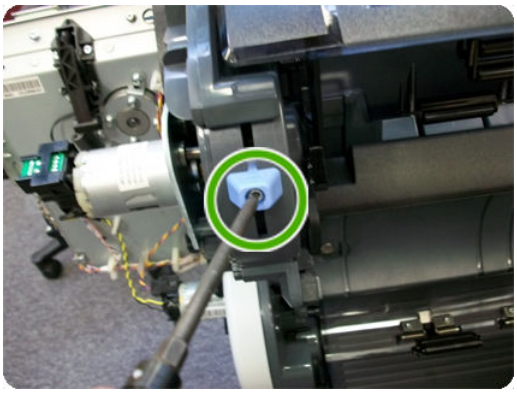

6. Remove a blue Wall Spacer.

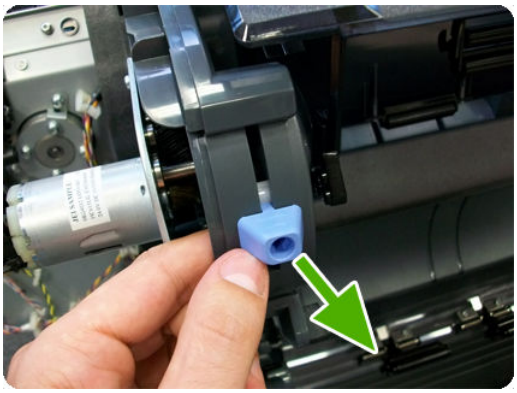

7. Remove a white slider.

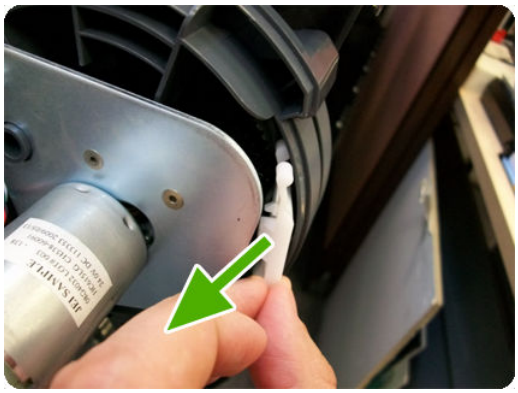

After removing Right and Left Wall Spacers, here are the removed parts.

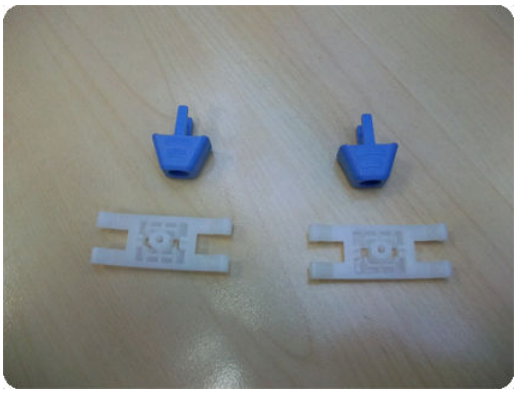

Scanner Position Sensor (MFP only)

NOTE: Disassemble metal casing before installing it.

NOTE: In order to avoid accidentally disconnecting the sensor while opening the scanner, because the cable is incorrectly adjusted, follow the installation steps carefully in the installation procedure.

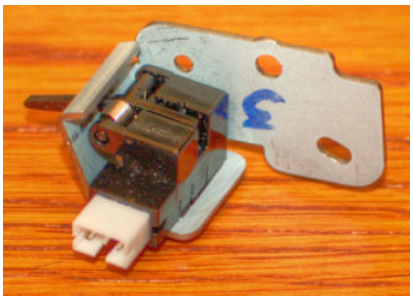

Removal

1. Switch off the product and remove the power cable.
2. Remove the Right Scanner Cover (MFP only) on page 467.
3. Open the Scanner.

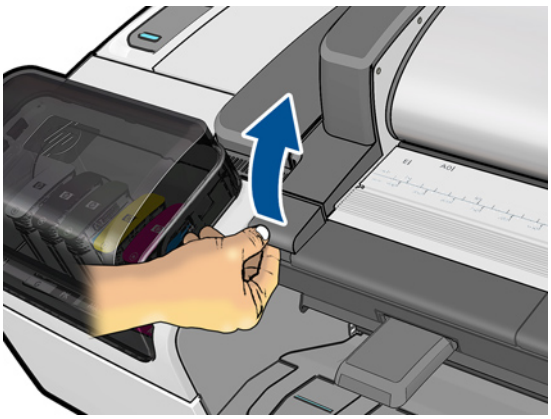

4. Remove the Scanner Position Sensor from the holder by unclipping it (keep the sensor cable plugged into the sensor).

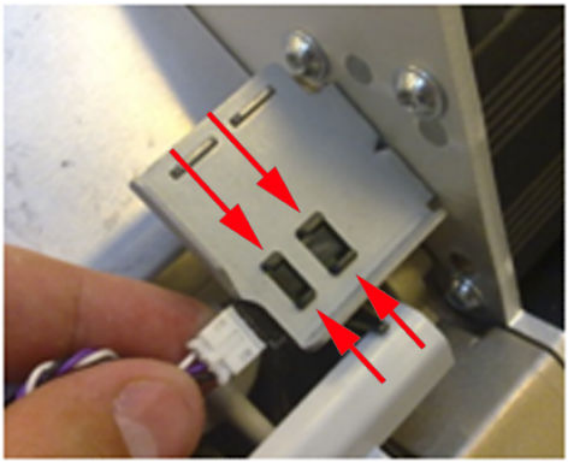

5. Remove the Scanner Position Sensor.

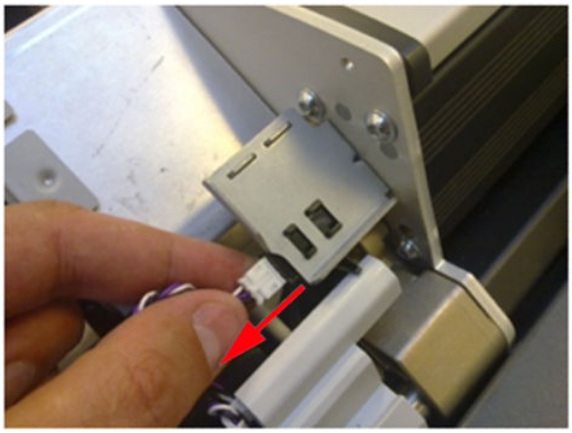

6. Disconnect the Scanner Position Sensor from the cable.

Installation

The correct adjustment of the cable of the Scanner Position Sensor is important, if the cable is not adjusted correctly this could cause the cable to disconnect when the scanner is opened, or become trapped between covers.

1. Make sure that the cable has a knot on the collar anchor of around 8 mm diameter, and located around 35-40 mm from the end of the white connector. This is to ensure there is a movement space for the cable when the scanner is opened and closed.

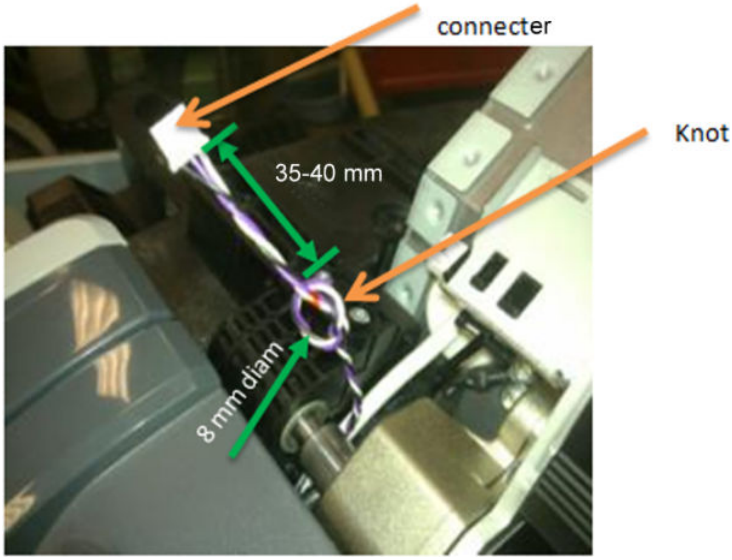

2. Anchor the knot of the cable on to the small clip of the Right Collar.

3. Ensure the knot of the cable is correctly placed on the clip as shown here.

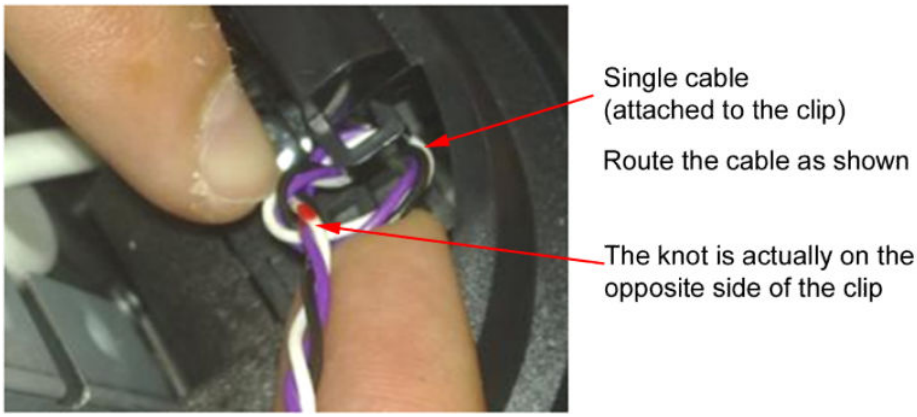

4. Once in the clip of the collar, pull slightly from the white connector in the direction of the arrow until the knot is fully attached.

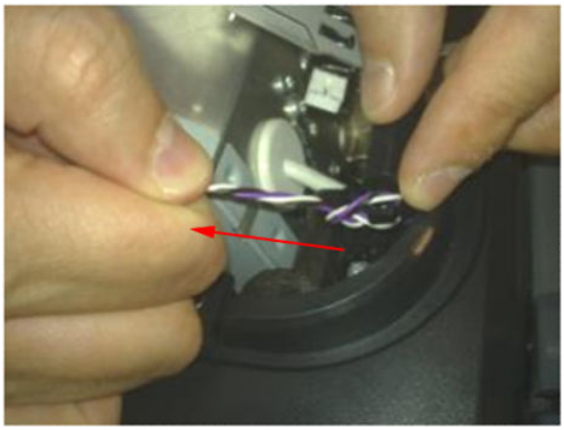

5. Make sure that the cable length is now 50-55 mm long from the knot to the connector.

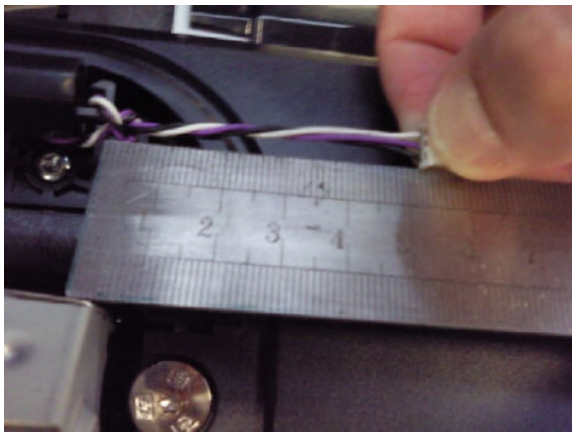

6. Connect the cable.

7. Push the knot of the cable in the direction of the arrow (if needed) .

8. Make sure that the cable is long enough when the scanner is in open position

⚠ CAUTION: If the cable of the Scanner Position Sensor is too long it may be become trapped between the Right Scanner Cover and the Right Collar

Torsion Damper (MFP only)

1. Switch off the product and remove the power cable.
2. Remove the Left Scanner Cover (MFP only) on page 409.
3. Remove three T-20 screws that secure the Torsion bracket to the left side

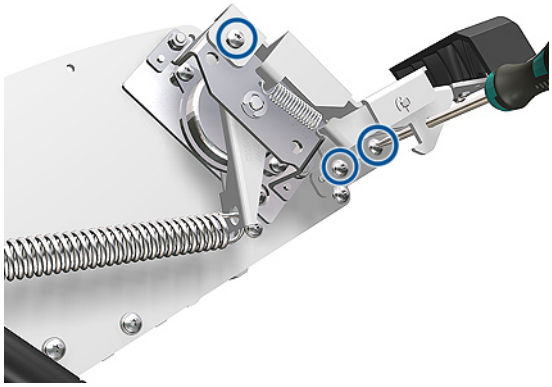

4. Put the CIS in a neutral position.

5. Remove the Torsion Damper from a clip on the side.

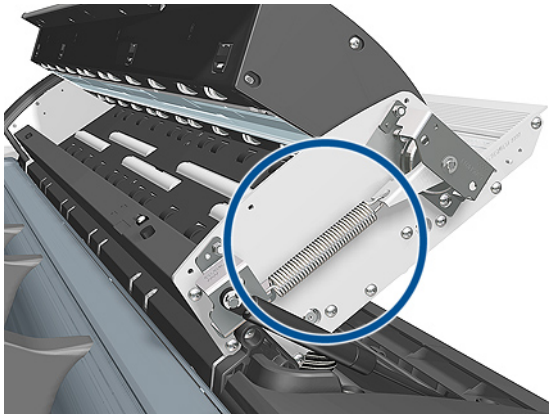

6. Remove the Torsion Damper Spring.

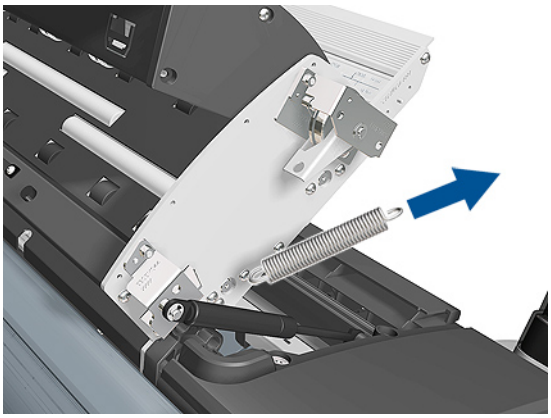

7. Remove five T-20 screws and open the CIS unit.

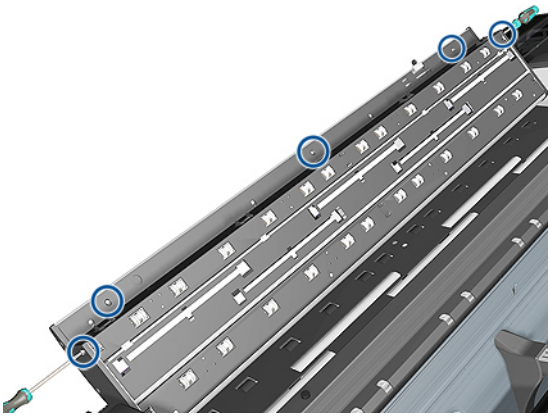

8. Loosen two T-20 screws to release the clamp on the damper shaft.

9. Remove two 7mm nuts.

CIS Element (MFP only)

1. Switch off the product and remove the power cable.
2. Remove Glass Plate on page 577
3. Before removing the black EMI plate, note the CIS number to be replaced (embossed in EMI plate).

4. Remove black CIS plate.

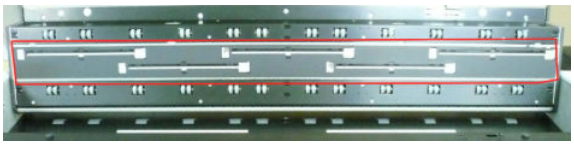

5. Flip CIS out and slide out to the side.

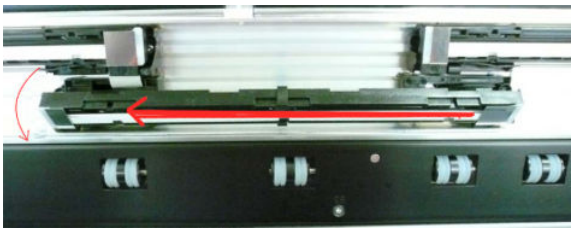

NOTE: After installing a new CIS element thoroughly clean the Scanner of dust and dirt and perform the Scanner Calibration, see Calibrate the Scanner on page 224.

Scanner Exit Media Sensors (MFP only)

1. Switch off the product and remove the power cable.
2. Open the CIS and remove five T-20 screws.

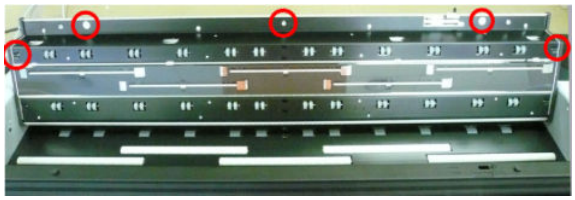

3. Remove four T-10 screws and remove the Rear Roller Cover.

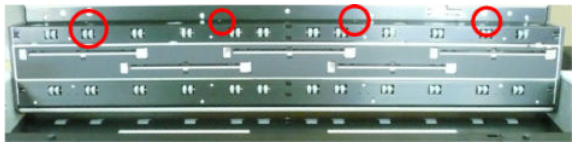

4. Disconnect the cables from the Exit Sensors.

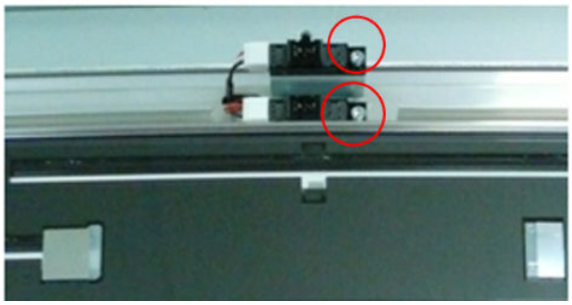

5. Remove the T-10 screws.

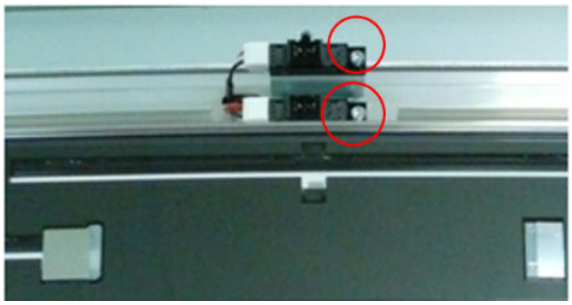

Scanner Entry Media Sensors (MFP only)

1. Switch off the product and remove the power cable.
2. Open the CIS and remove five T-20 screws .

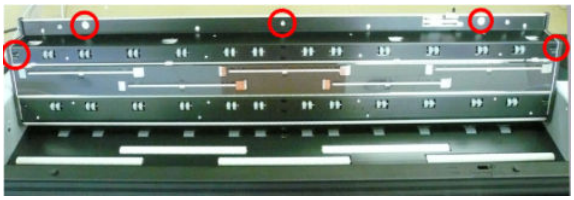

3. Remove four T-10 screws and remove the Front Roller Cover.

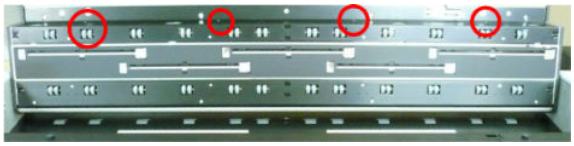

4. Disconnect the cables from the Entry Sensors.

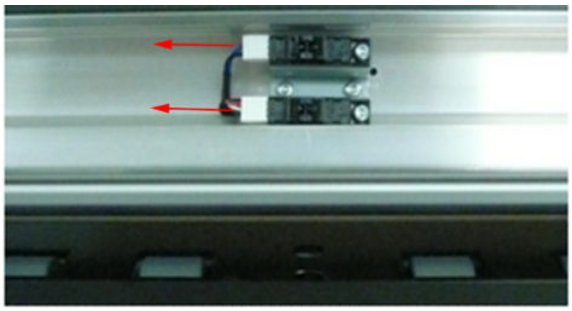

5. Remove the T-10 screws.

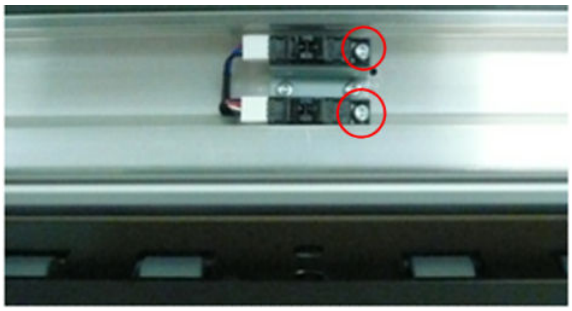

Pressure Rollers (MFP only)

1. Switch off the product and remove the power cable.
2. Remove the Roll Cover, Upper on page 477.
3. Remove the Converger on page 334
4. Remove the Rear Cover (MFP only) on page 457
5. Open the Scanner.

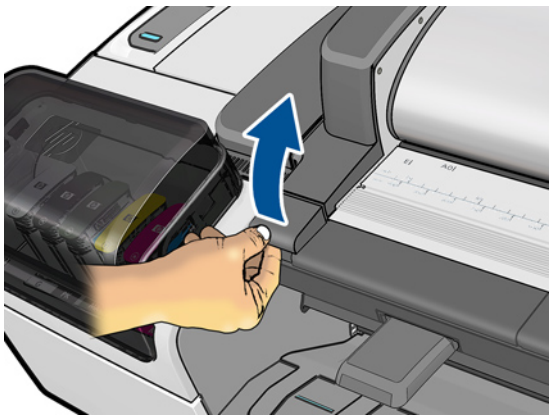

6. Remove three T-15 screws that secure the Roller Cover Sheet

7. Remove the Roller Cover Sheet by pulling it out.

8. Remove Pressure rollers by pulling them out.

Scanner Controller Board (MFP only)

1. Switch off the product and remove the power cable.
2. Open the CIS unit and remove five T-20 screws.

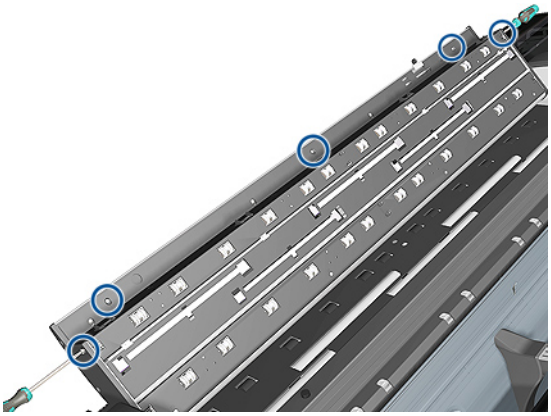

3. Remove four pinch rollers from the CIS unit.

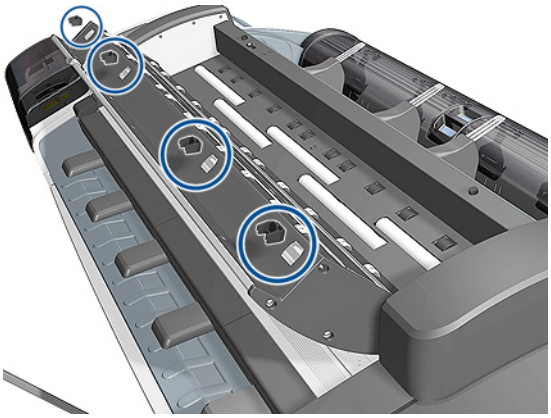

4. Close the cover of the CIS unit, but leave the top cover open.

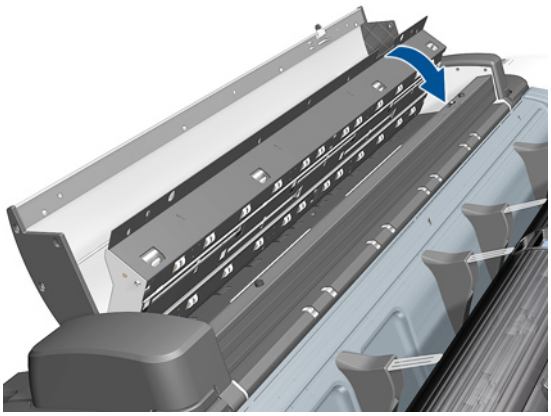

5. Disconnect all cables from the Scanner Controller Board.

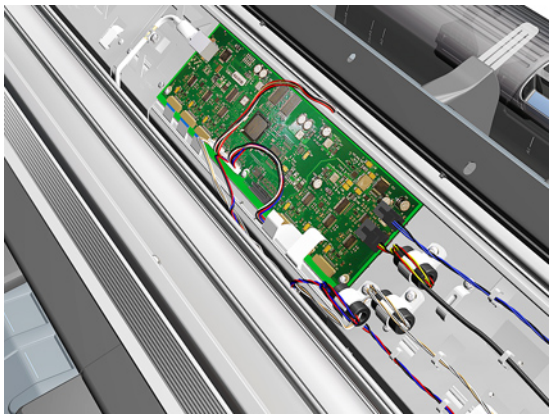

6. Remove three T-10 screws from the Scanner Controller Board.

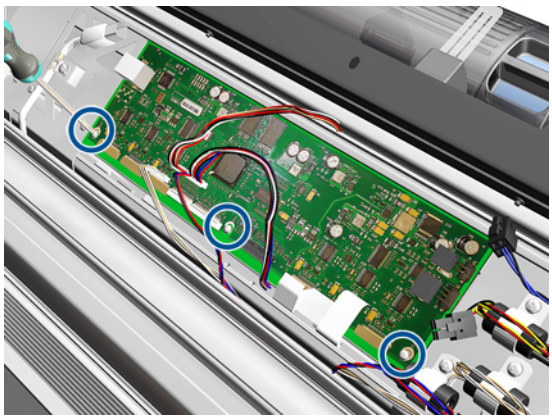

7. Remove the Scanner Controller Board.

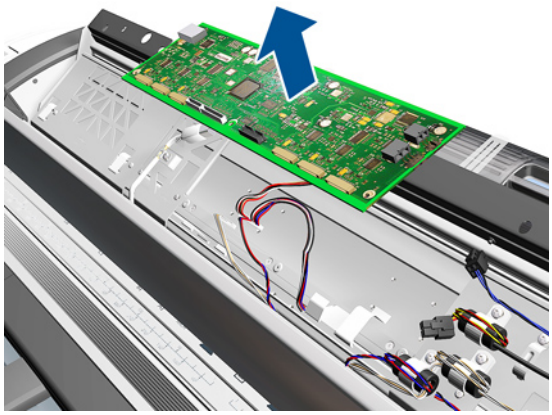

Scanner Motor Assembly (MFP only)

1. Switch off the product and remove the power cable.
2. Remove the Right Scanner Cover (MFP only) on page 467
3. Remove the Scanner Motor Enclosure cover by pulling it off.

4. Disconnect the Motor Cables (A) and loosen the Belt Tensioner screw (B).

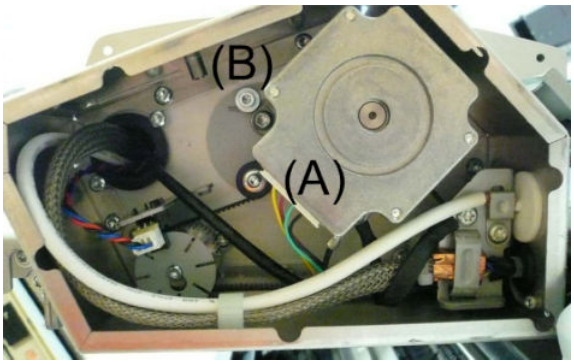

5. Disconnect grounding cable (A) and remove two T-20 screws that secure the Scanner Motor. .

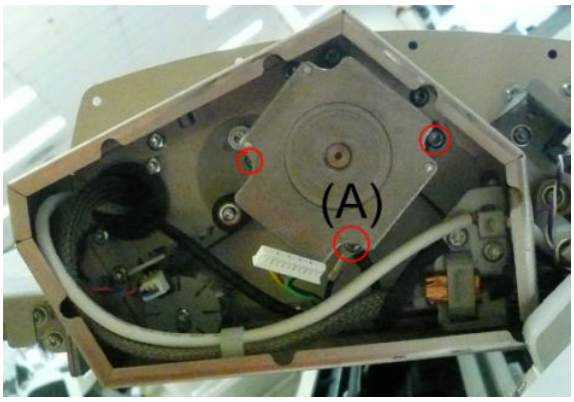

Taco Sensor (MFP only)

1. Switch off the product and remove the power cable.
2. Remove the Right Scanner Cover (MFP only) on page 467
3. Remove the Scanner Motor Enclosure cover by pulling it off.

4. Disconnect the Taco Sensor.

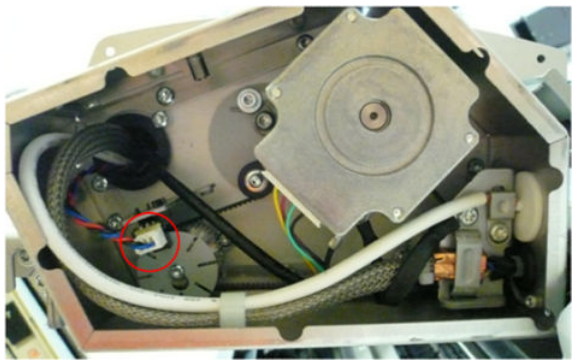

5. Remove T-10 screw that secures the Taco Wheel and remove.

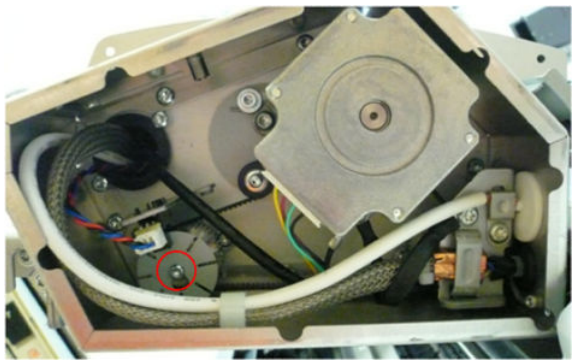

6. Release the Taco Sensor from clips and remove.

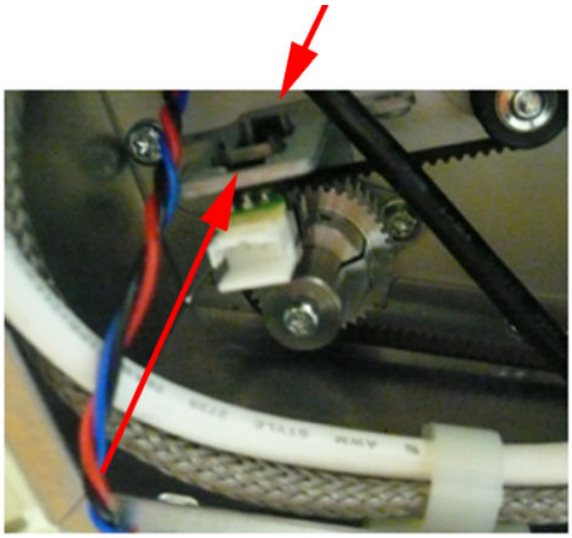

Touch Control Panel

Removal

1. Switch off the product and remove the power cable.
2. Open the Right Ink Cartridge Door by inserting a screwdriver into the side to unlatch it, and then lift up the door.

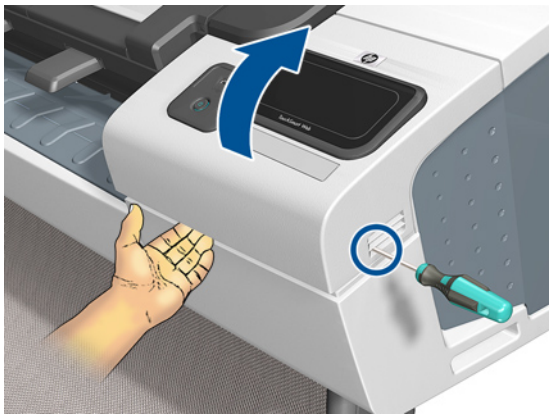

3. Remove one T-15 screw and two T-10 screws from the back of the Touch Control Panel.

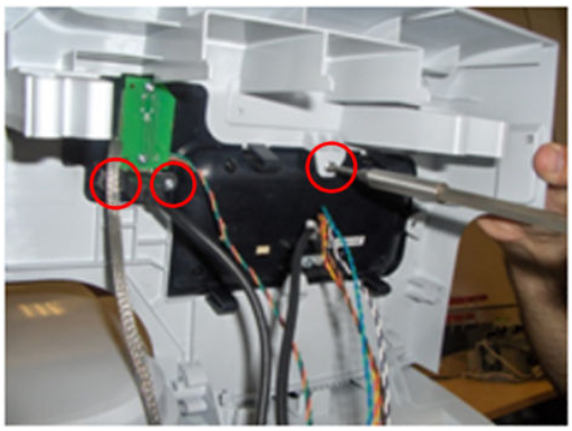

4. Disconnect the USB and Grounding cable from the Touch Control Panel.

5. Disconnect the small cable.

6. Disconnect the USB cable from the cable bundle

7. Disconnect the Harness Cable from the cable bundle.

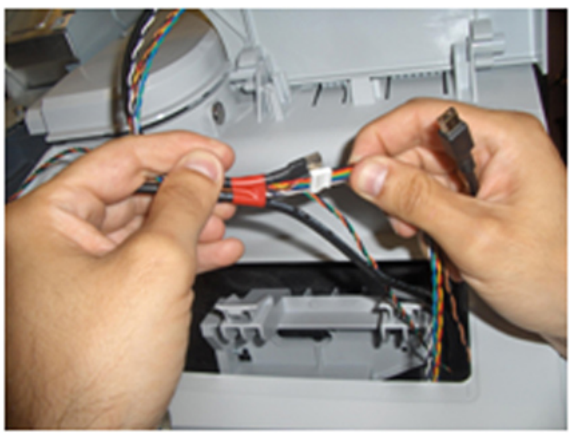

8. Remove the tape securing the cable bundle.

9. Press on the four corners of the Touch Control Panel to release it from the back of the Right Ink Door.

10. Remove the Touch Control Panel from the Right Ink Door.

NOTE: When you finish installing or replacing this component, you must perform the necessary Service Calibrations. To find which calibrations you must perform, see Service Calibration Guide to Removal and Installation on page 267.

NOTE: When you reinstall the Touch Control Panel, you must make sure that the Ferrite Core is correctly positioned. The Ferrite Core is necessary to avoid electrostatic interference being generated.

Window

Removal

1. Switch off the printer and remove the power cable.
2. Open the Window.

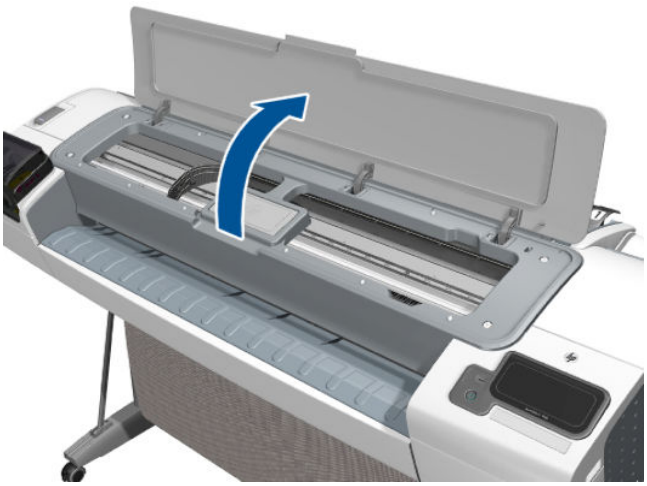

3. Remove the two T-15 screws that secure the left Window hinge locking plate to the Top Cover.

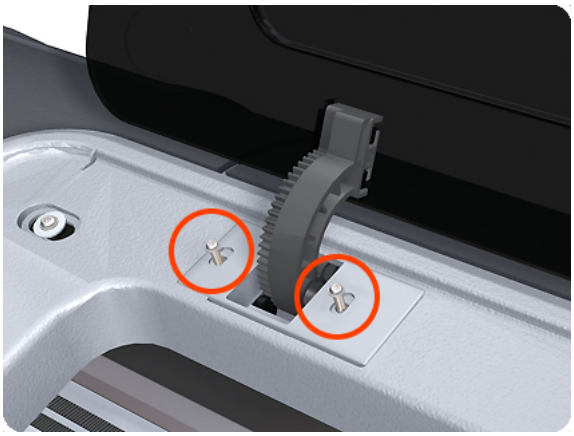

4. Remove the left Window hinge locking plate from the Top Cover.

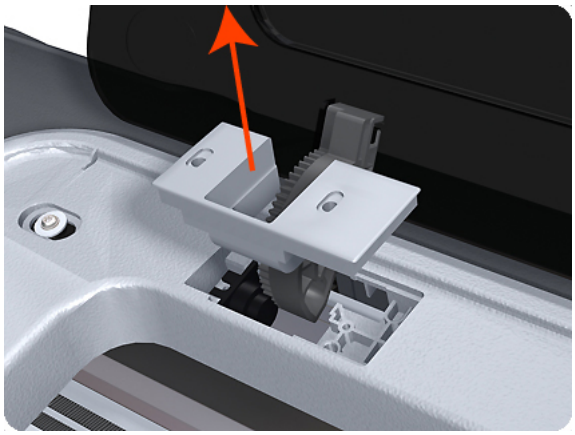

5. Remove the Damper Rotary from the Top Cover (T1200 only).

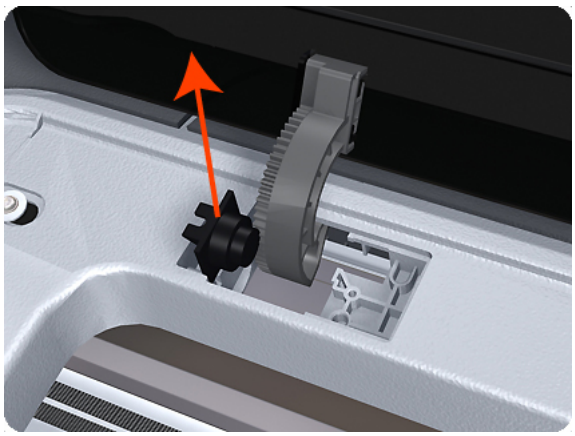

6. Remove the T-15 screws that secure each of the remaining three Window hinge locking plates to the Top Cover.

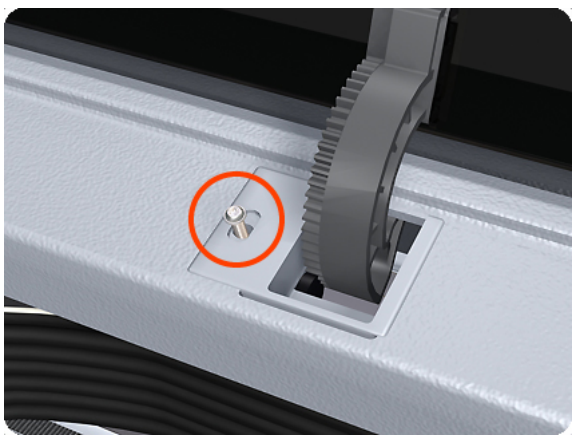

7. Remove the remaining three Window hinge locking plates from the Top Cover.

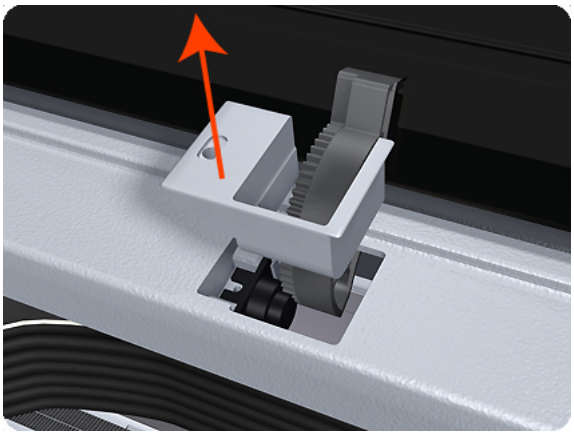

8. Remove the remaining three Damper Rotary pieces from the Top Cover.

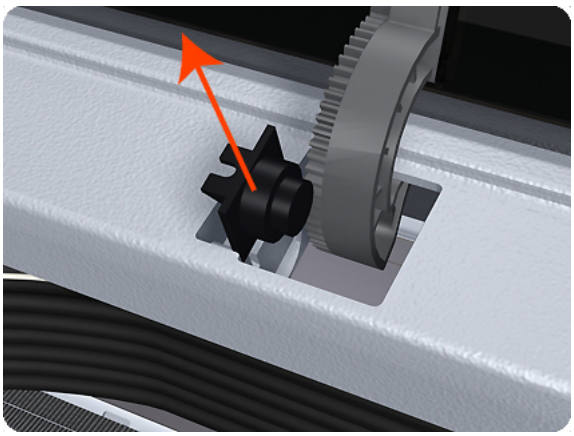

9. Grip the Window at the left and right edges and move it horizontally towards the right as far as it will go.

10. Pull the Window towards the front to disengage the hinges.

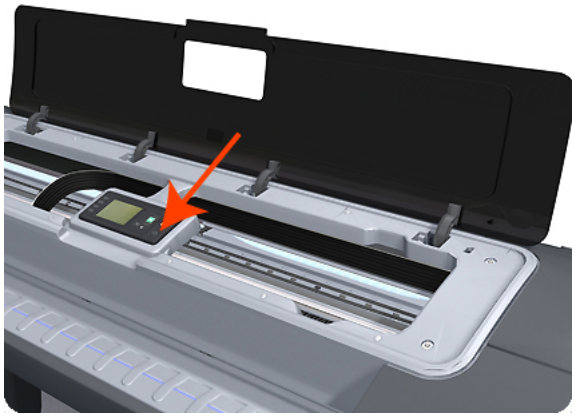

11. Lift the Window vertically out of the printer.

Window Position Sensor

Removal

1. Switch off the printer and remove the power cable.
2. Remove the Rear Cover on page 460.
3. Remove the Front Top Cover on page 352.
4. Disconnect the Window Position Sensor.

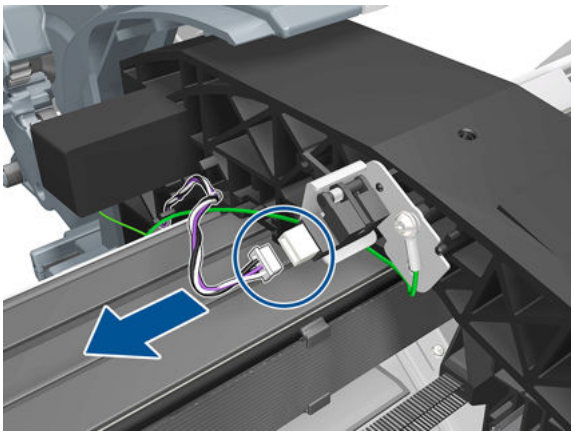

5. Remove one T-15 screw that secures the Window Position Sensor to the printer.

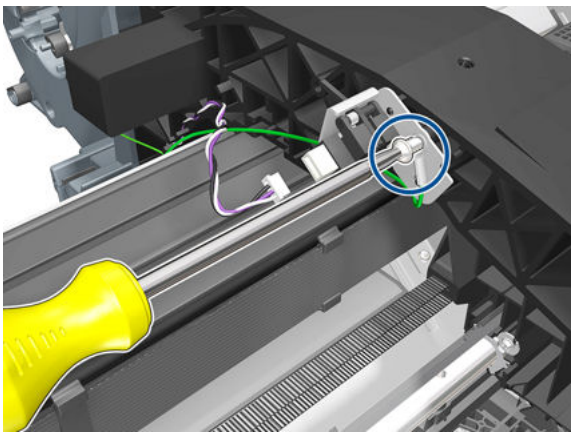

6. Remove the grounding cable. Do not forget to replace it when installing the new Window Position Sensor.

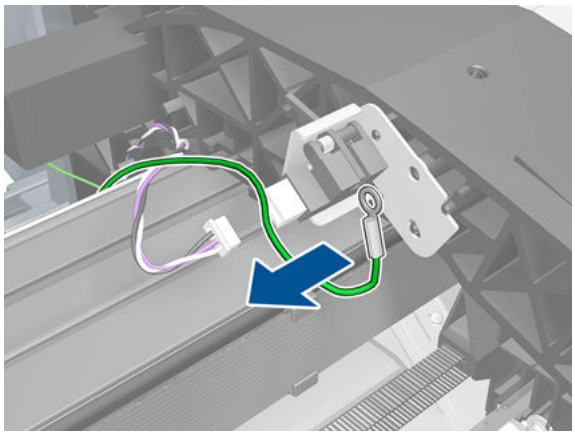

7. Remove the Window Position Sensor from the printer.

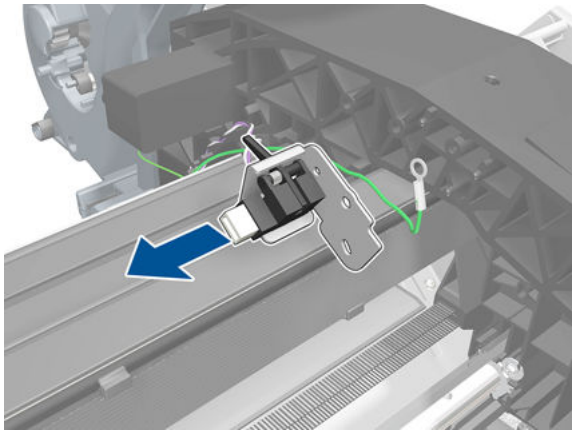

NOTE: When you finish installing or replacing this component, you must perform the necessary Service Calibrations. To find which calibrations you must perform, see Service Calibration Guide to Removal and Installation on page 267.

7 Preventive Maintenance

- Preventive Maintenance
- Preventive Maintenance Kits

Preventive Maintenance

Cleaning the Product

To maintain the product in good operating condition, keep it free of accumulated dust, ink, and other contamination. Cleaning intervals are determined by the product environment and by the types of product supplies used.

General Cleaning

Proper general cleaning should include the following:

NOTE: To prevent an electric shock, make sure that the product is switched OFF and unplugged before any cleaning is performed. Do **not** let any water get inside the product.

1. Blow away dust accumulation with compressed air if available.
2. Clean the outer surface of the product with a damp sponge or cloth. Use a mild soap and water solution if necessary. Do not use abrasive cleaners.
3. Wipe the product dry with a soft lint-free cloth.

Cleaning the Drive Roller and Overdrive

NOTE: If ink is spilled on the Overdrive, remove the ink. Due to the ink's reflectance, ink on the Overdrive can disrupt the product's edge-sensing function. To remove any ink from the Overdrive, perform the following procedure:Prevent water or other liquids from running onto electrical components or circuits, or through openings in the Electronics Module.

1. Perform the Turn Drive Roller Utility. See Turn Drive Roller on page 172.
2. Open the Scanner (MFP only) or Window.

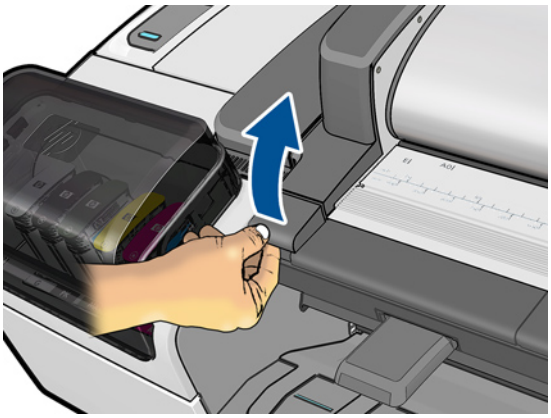

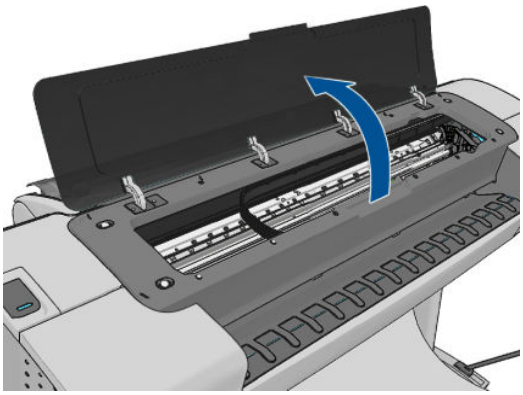

3. Apply any common household cleaning solution (water based only) to a soft, lint-free rag and apply it to the Drive Roller and Overdrive surface while it is rotating. Make sure that you thoroughly clean the Drive Roller and Overdrive surface.
4. Press **Enter** when you have completed the cleaning procedure.
5. Allow the Drive Roller to dry before loading paper in to the product.

Cleaning the Encoder Strip

1. Make sure that the product is not printing and that the Carriage Assembly is located at the Service Station on the far right side of the product.
2. Using tap water and a small cloth that will not leave fibers in the product, dampen the cloth and remove any excess water so that the cloth is damp but not wet.

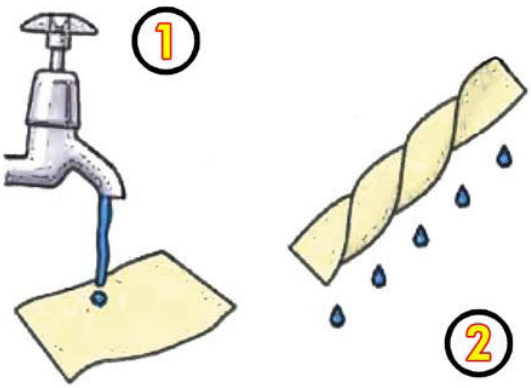

3. Open the Scanner (MFP only) or Window.

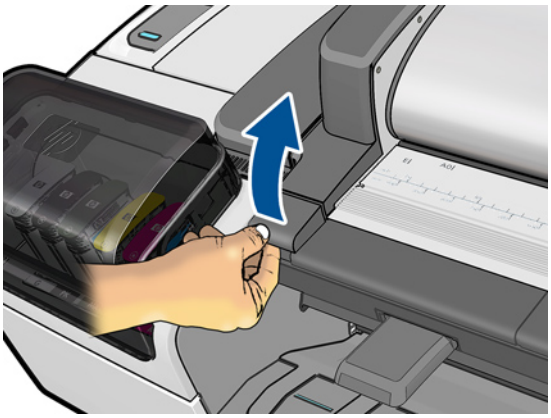

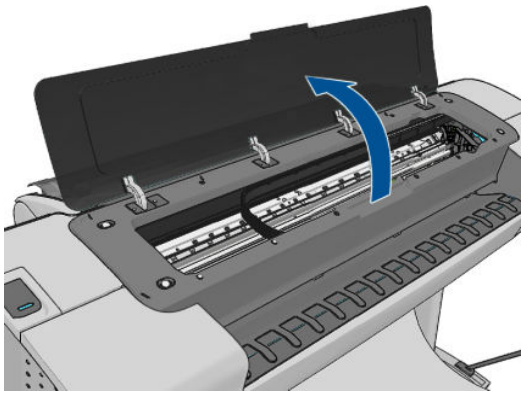

4. Hold the cloth in an inverted “U” shape around the Encoder Strip and carefully wipe until no ink residue appears on the cloth. Be very careful not to scratch the Encoder Strip with your fingernail or any other object.

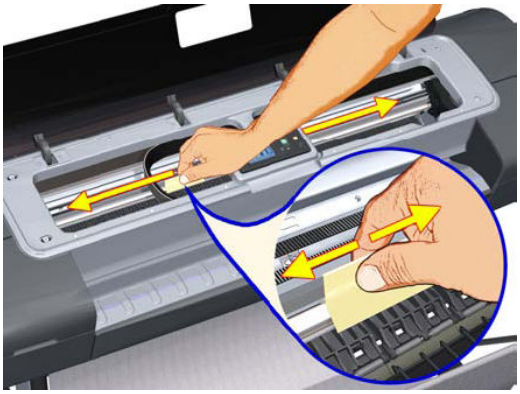

Make sure that you are holding the cloth correctly.

NOTE: Do not move the Carriage Assembly away from the Service Station.

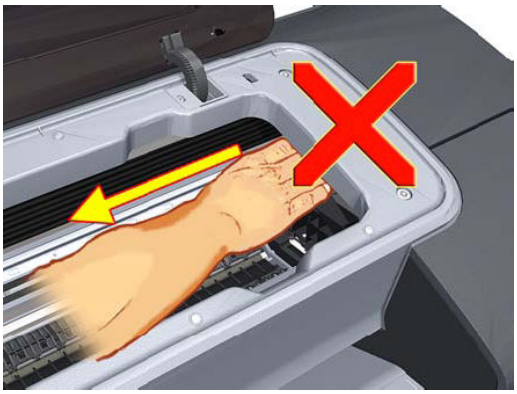

5. Close the product Scanner or Window.

6. Press on the Printhead Menu icon and the following screen is displayed. Press on the **Replace Printhead** tab. The Carriage Assembly moves to the left and stops in the correct position to remove the printheads.

7. Turn off the product by using the power switch on the back of the product.

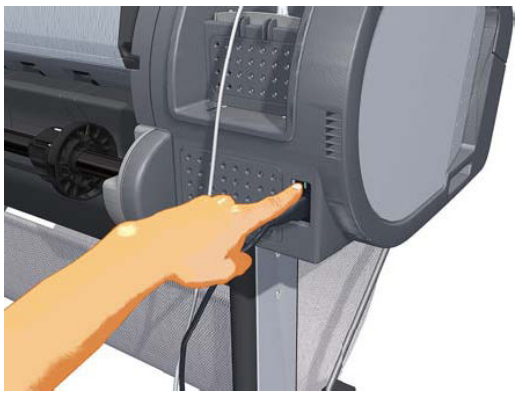

8. Open the Scanner and move the Carriage Assembly further to the left, allowing you to access the Service Station.

9. Clean the part of the encoder strip inside the Service Station by repeating steps 2 to 6.

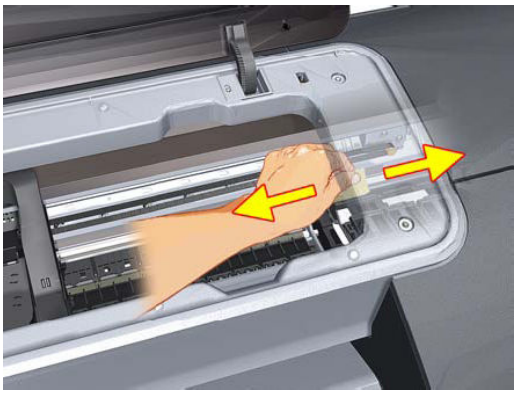

10. Close the Scanner or Window.

11. Turn the product back on.

Cleaning the Glass Plate

The customer is recommended to clean the glass plate periodically, depending on the usage of the product. Keeping the glass free from smears, dust and dirt is an essential part of avoiding image quality issues. If the customer complains of image quality issues, you can also clean the glass plate using the following procedure.

1. Turn off the product using the power key at the front, then also turn off the power switch at the rear and disconnect the power cable.

2. There is a small lever at the rear left of the scanner. Slide the lever to the right and open the CIS.

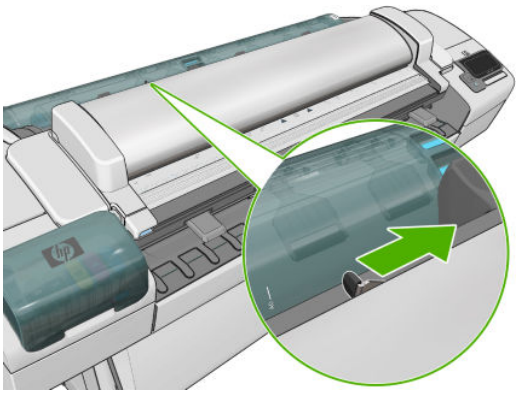

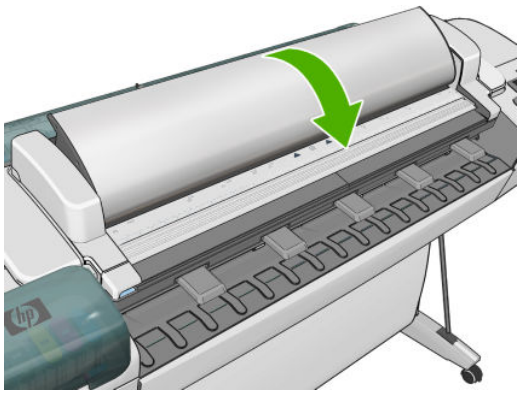

3. Gently wipe the glass plate and the surrounding area with a lint-free cloth dampened with water and then wrung dry. A suitable cloth is provided with the product.

⚠ CAUTION: Do not use abrasives, acetone, benzene or fluids that contain these chemicals. Do not spray liquids directly onto the scanner glass plate or anywhere else in the scanner.

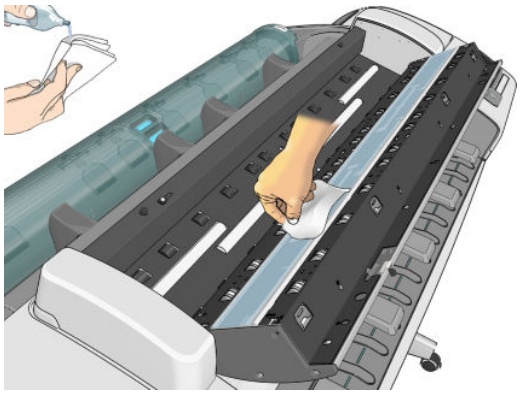

Do not worry about tiny droplets of water left on the glass: they will evaporate.

4. Optionally, for more thorough cleaning:
   - Remove the glass plate and clean it on both sides. See Glass Plate on page 577.
   - Clean the pressure rollers (between the feed rollers).

5. Close the CIS and gently push it down to lock it into place.

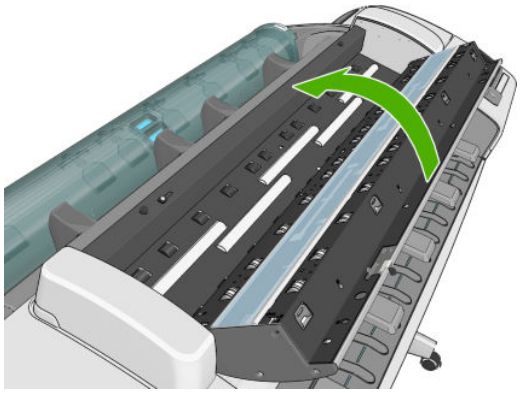

6. Clean the area immediately in front of the scanner, where the scanned sheet rests before scanning.
7. Reconnect the product's power cable, turn on the power switch at the rear, and turn on the product using the power key.

Carriage Assembly Lubrication

To ensure correct operation of the product you must lubricate the Carriage Assembly whenever any of the following are encountered if:

- The Touch Control Panel displays "Maintenance #1 required".
- There is excessive noise when moving the Carriage Assembly.
- A shut down of the carriage PWM error message appears.
- There are IQ (vertical banding problems).

You should also lubricate the Carriage Assembly whenever you change any of the following service parts:

- The Carriage Rear Bushing.
- The Carriage Assembly.
- The Carriage Rail Oiler.

To lubricate the Carriage Assembly you will require the Lubrication Kit (Q5669-60692). Use the following procedure to lubricate the Carriage Assembly:

1. Use the IPA alcohol (Q6675-60070) and the cleaning cloth to clean the Carriage Rail and the Carriage Slider Rod. Do not use IPA alcohol in California or other areas that restrict the volatile organic compound (VOC) content of cleaning solvents. A regulatory compliant alternate should be used.
2. Use an Oil Dispenser (Q6675-60062) to lubricate the Carriage Rail and the Carriage Slider Rod.
3. Replace the Carriage Rail Oiler on page 321 with the new one contained in the kit and add 2 or 3 drops of oil to the foam of the Carriage Rail Oiler.
4. Use an Oil Dispenser (Q6675-60062) to lubricate the Carriage Rear Bushing.

Moisture on the Product

Users should use the product in an environment between 20% and 80% relative humidity. To recover from moisture condensation, turn the product Off, and, using the main roller as a reference, wait until the product is completely dry before using it again.

Noisy Carriage Bushing

To prevent noisy movement of the carriage, remove aluminum or dust particles from the bushing at the back of the carriage, and from the slider path along which the bushing moves. Lubricate the slider path using the Lubrication Kit (Q5669-60692).

Belt Swelling

To prevent new belts from swelling incorrectly, keep them in their bags with desiccant until you need to install them.

Level of Product Usage

Normal product use means 6,000,000 Carriage Cycles (which corresponds to approximately 100,000 A0 prints on average). Under normal usage conditions, it will be approximately 5 years before the product needs maintenance. If the product is used more than the normal usage conditions, then it will need maintenance service much more frequently.

One of the EEROM counters is assigned to counting the number of carriage cycles.

Service Part	LIFE_VALUE	Maintenance Advice
Belt Cycles	3,000,000	PMKIT1
Bushings Life	3,000,000	PMKIT1
Trailing Cable Cycles	3,000,000	PMKIT1
Scan Axis Cycles	3,000,000	PMKIT1
Scan Axis Distance Covered	4,500,000	PMKIT1
Tubes Cycles	3,000,000	PMKIT1
Right Spittoon Volume	600,000,000	PMKIT2 (except for Z2600, Z5600)
Left Spittoon Volume	51,000,000	PMKIT2 (except for Z2600, Z5600)
Cutter Life	25,000	PMKIT3 (Z2600, Z5600)
Right Spittoon Volume	450,000,000	PMKIT2 (only for Z2600, Z5600)
Left Spittoon Volume	60,000,000	PMKIT2 (only for Z2600, Z5600)

When these components of the product exceed this amount, the Touch Control Panel displays the following message:

"Maintenance #1 required"

"Maintenance #2 required"

"Maintenance #3 required"

Once one of the maintenance advised messages is displayed, the relevant preventive maintenance kit must be used to replace the most worn parts of the product. See Removal and Installation on page 259 when replacing the necessary parts.

Preventive Maintenance Kits

Preventive Maintenance Kit #1 for T790 24-in (CQ305–60017)

Part Number	Description
CH538-67044	Carriage with Cutter Assembly SV
CH538-60141	Scan Axis Motor SV
CK837-67014	T1120/620 Ink Supply Tubes 24
CQ305-60016	T770 Belt 24 SV

NOTE: The Lubrication Kit is not included in the Preventive Maintenance Kit. See Tools 2 on page 253.

Preventive Maintenance Kit #1 for T790 44-in Models, T795, T1300 and T2300 (CH538-67024)

Part Number	Description
CH538-67044	Carriage with Cutter Assembly SV
CH538-60141	Scan Axis Motor SV
CH538-67025	Tube System 44 Assembly with Trailing Cable SV (Ferrite(s) of the Tube System/Trailing Cable are not included in the kit. Please re-use them from the product).
CH538-67018	Belt 44 SV

NOTE: The Lubrication Kit is not included in the Preventive Maintenance Kit. See Tools 2 on page 253.

Preventive Maintenance Kit #2 for T790, T795, T1300 and T2300 (CH538-67040)

Part Number	Description
CH538-60051	Service Station Assembly

Preventive Maintenance Kit #1 for Z5400 (E1L21-67015)

Part Number	Description
E1L21-67020	Carriage with Cutter Assembly SV
CH538-67076	Scan Axis Motor SV
E1L21-67008	Tube System 44 Assembly with Trailing Cable SV (Ferrite(s) of the Tube System/Trailing Cable are not included in the kit. Please re-use them from the product).
CH538-67018	Belt 44 SV

NOTE: The Lubrication Kit is not included in the Preventive Maintenance Kit. See Tools 2 on page 253.

Preventive Maintenance Kit #2 for Z5400 (E1L21-67006)

Part Number	Description
E1L21-67006	Service Station (includes Aerosol Fan)

Preventive Maintenance Kit #1 for Z2600 (T0B52-67016)

Part Number	Description
T0B51-67010	Carriage

Part Number	Description
T0B52-67008	24-in Tube system
CQ305-60016	T770 Belt 24 SV
CH538-67076	Scan Axis Motor

Preventive Maintenance Kit #1 for Z5600 (T0B51-67008)

Part Number	Description
T0B51-67010	Carriage
T0B51-67005	Tube system 44 Assembly SV
CH538-67018	Belt 44 SV
CH538-67076	Scan Axis Motor

Preventive Maintenance Kit #2 for Z2600, Z5600 (T0B51-67023)

Part Number	Description
E1L21-67006	Service Station (includes Aerosol Fan)
Q5669-00248	Foam

Preventive Maintenance Kit #3 for Z2600, Z5600 (Q5669-60722)

Part Number	Description
Q5669-60713	Cutter assembly SV

A CSR Installation Flyers

This appendix reproduces the fliers that illustrate how to install CSR parts.

- Cutter assembly
- Freewheel assembly
- Freewheel assembly (screwdriver)
- Left side panel (T1200)
- Pinch arm assembly
- Pinch arm assembly (screwdriver)
- Roll cover upper bumpers
- Roll cover upper bumpers (screwdriver)
- Foot Extension
- Front Deflector
- Rear Deflector Mylar
- Glass Plate
- Latch Handle Cover

Cutter assembly

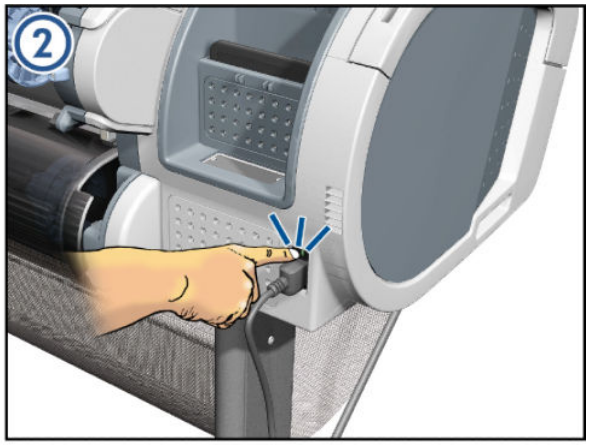

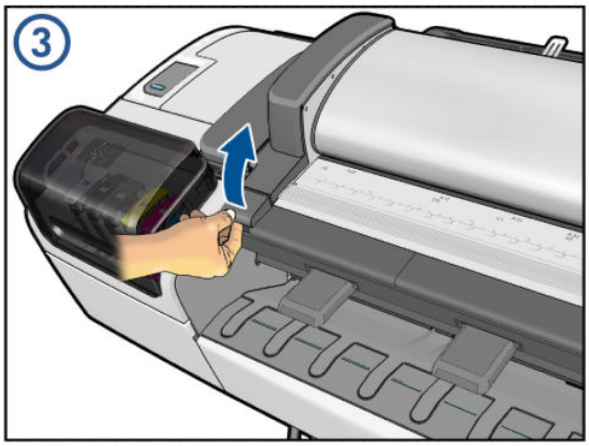

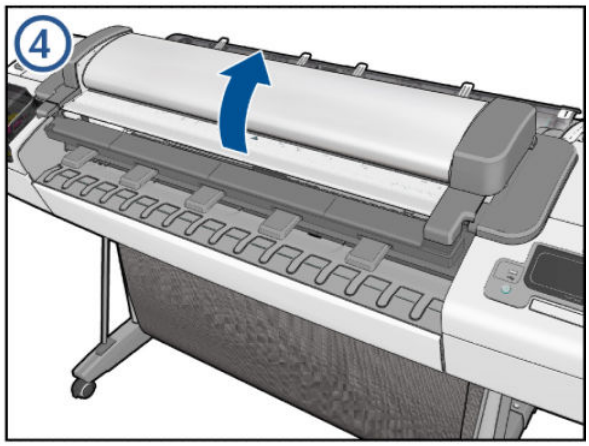

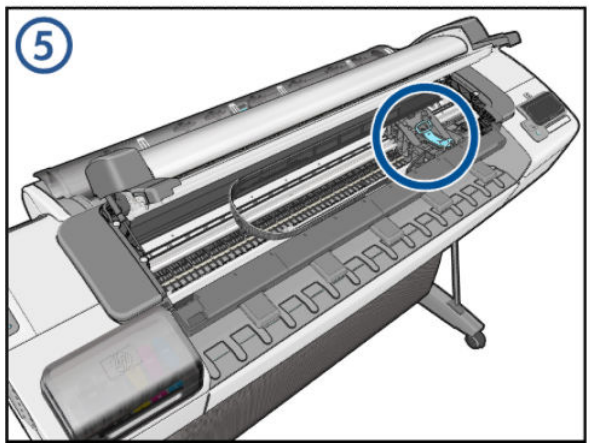

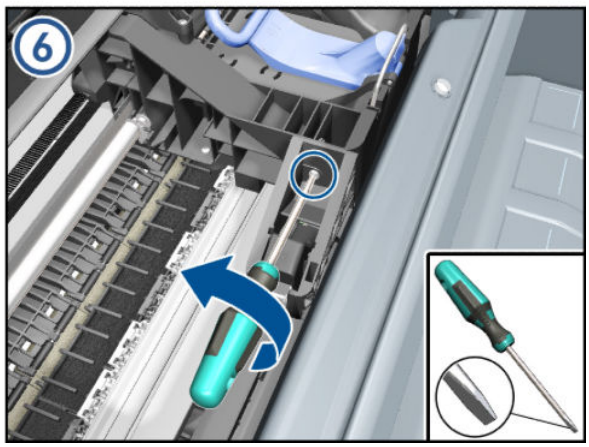

7.

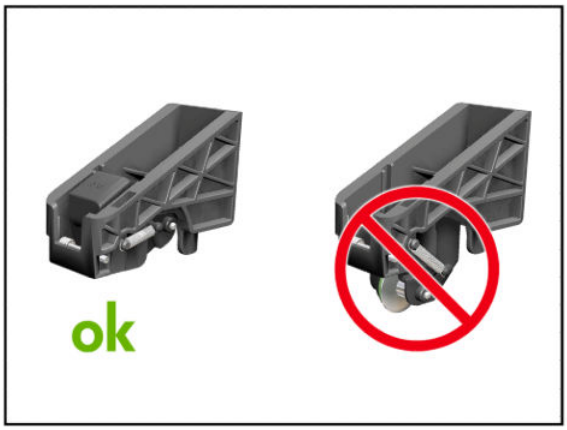

8.

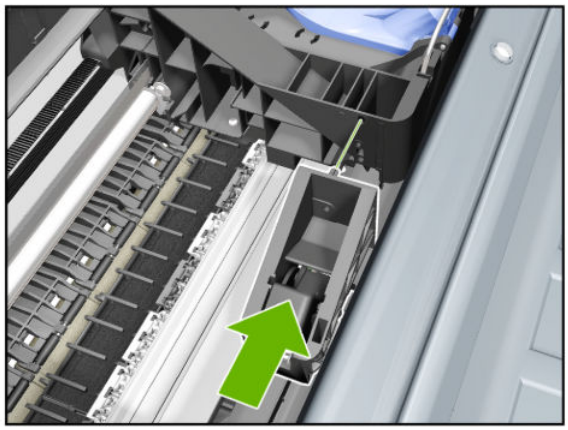

9.

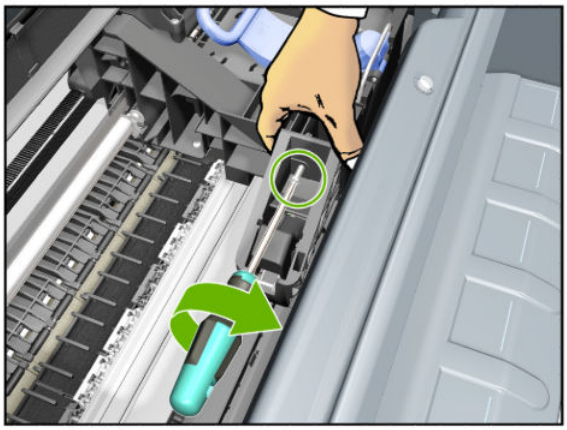

10.

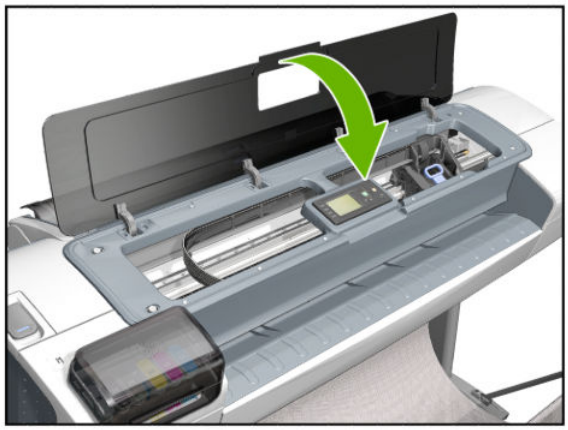

11.

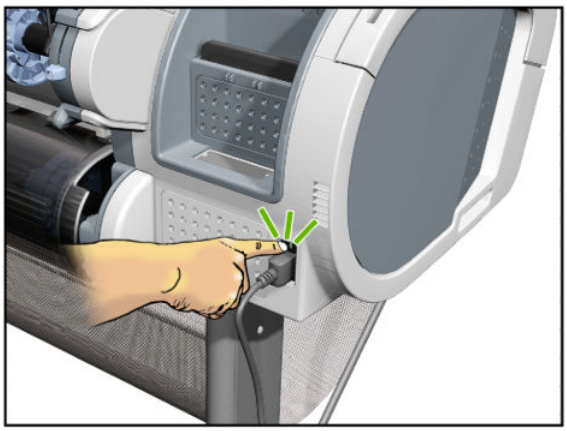

Freewheel assembly

1.

2.

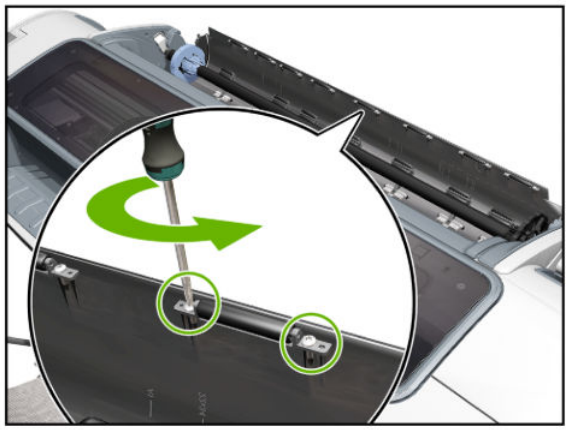

3.

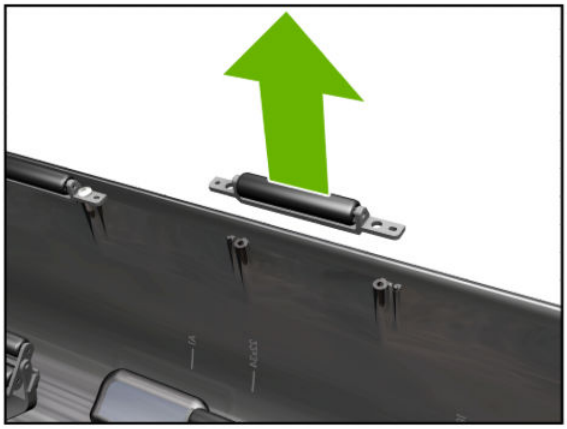

4.

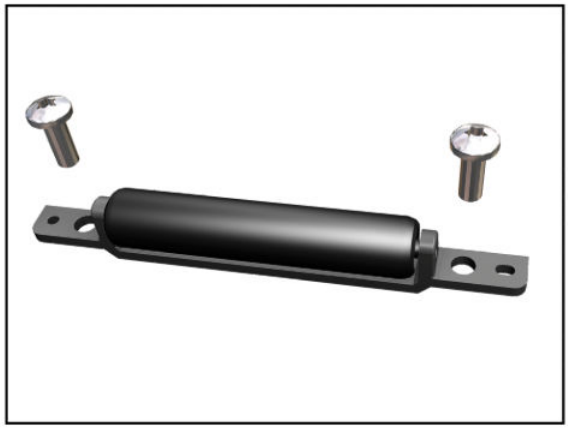

5.

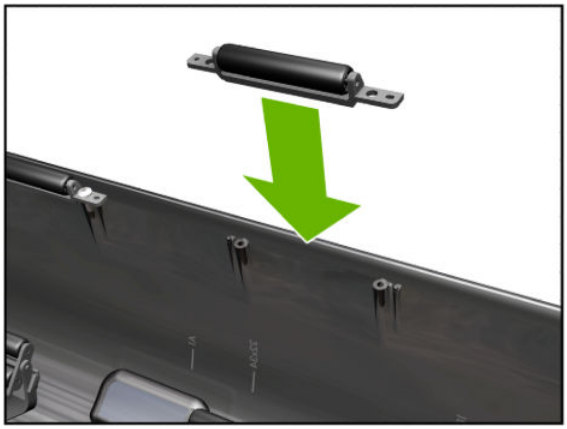

6.

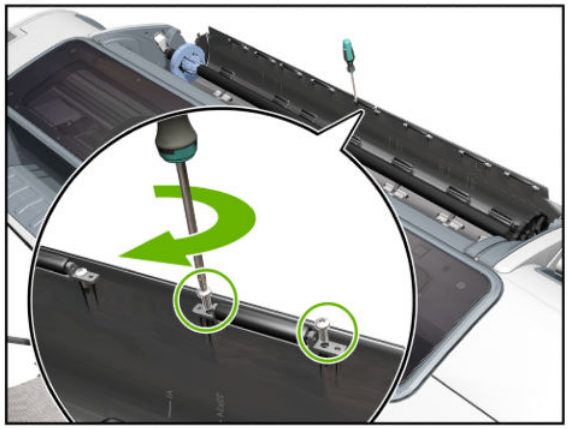

7.

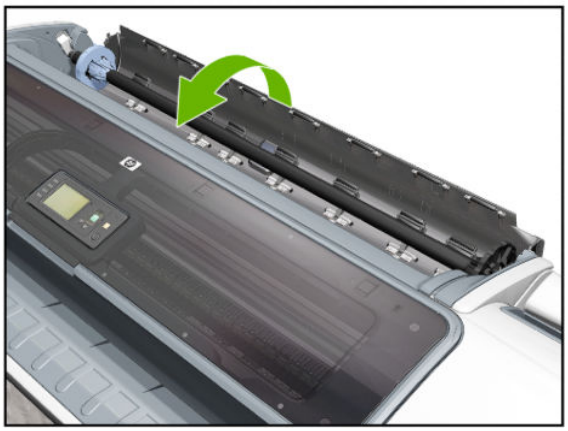

Freewheel assembly (screwdriver)

1.

2.

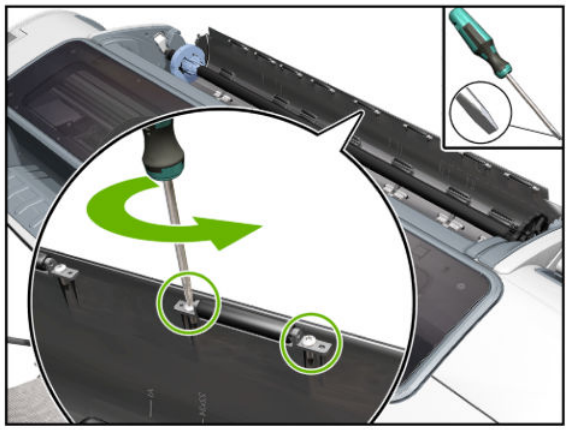

3.

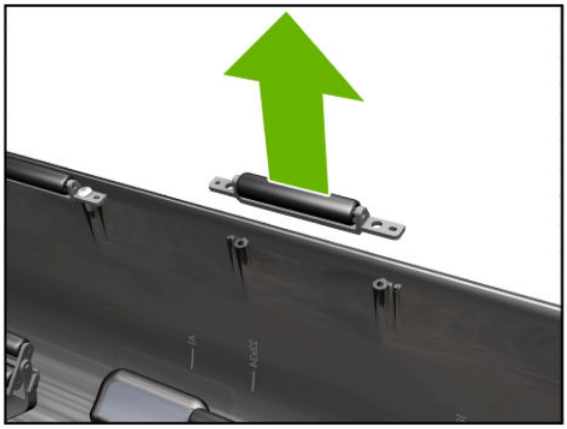

4.

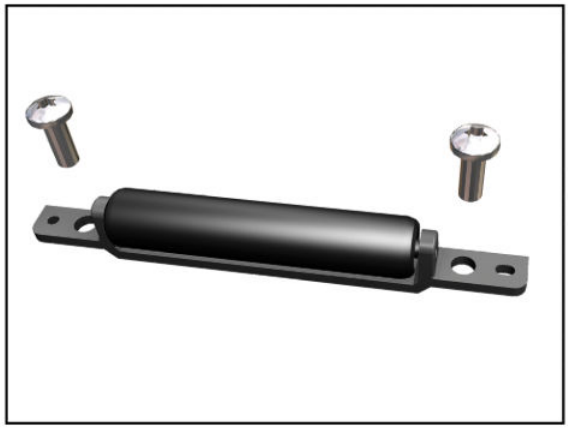

5.

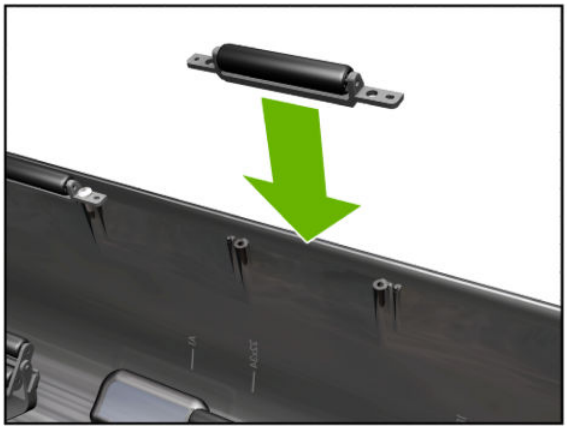

6.

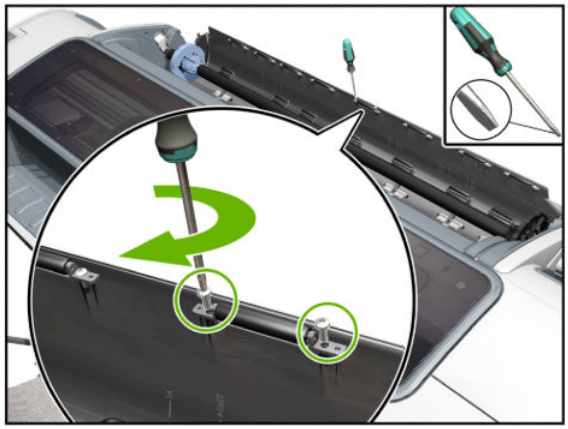

7.

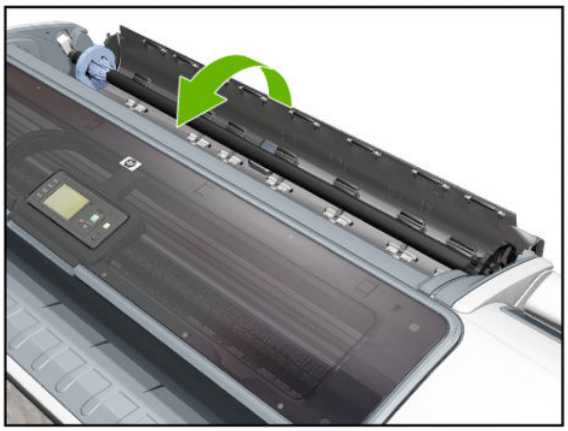

Left side panel (T1200)

1.

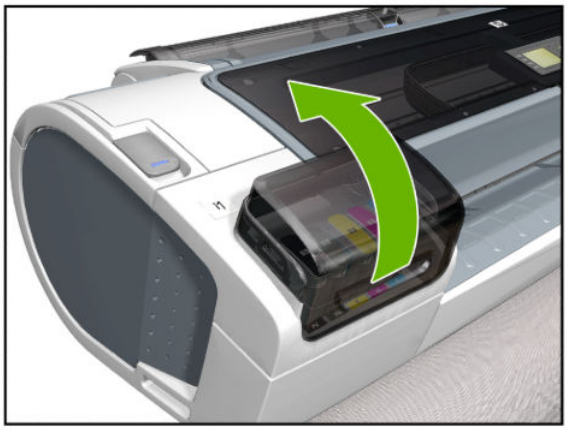

2.

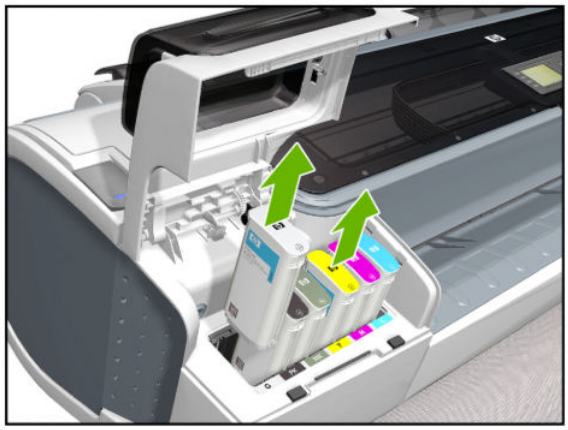

3.

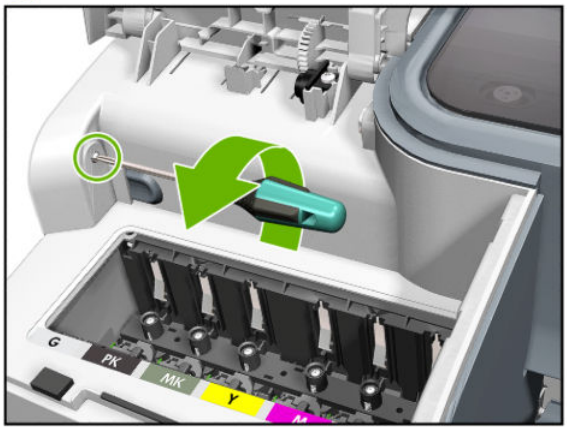

4.

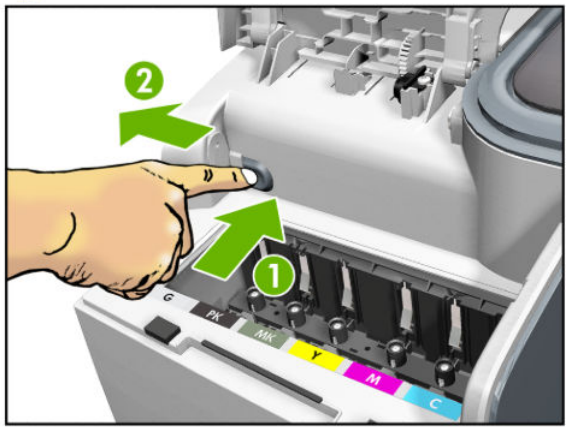

5.

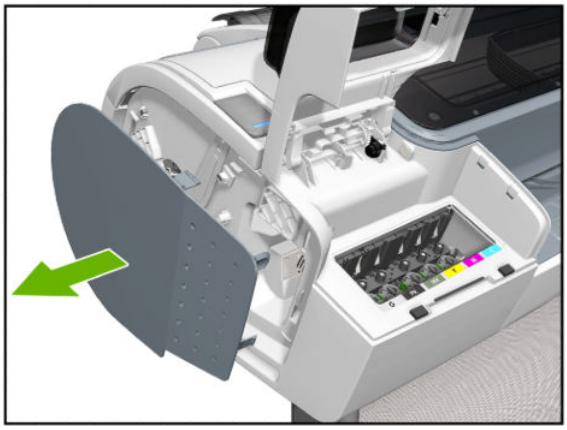

6.

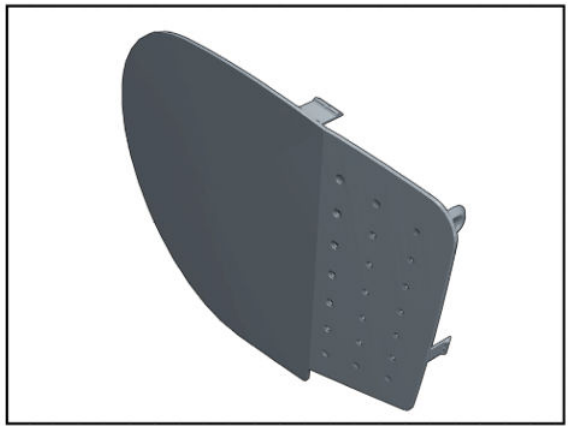

7.

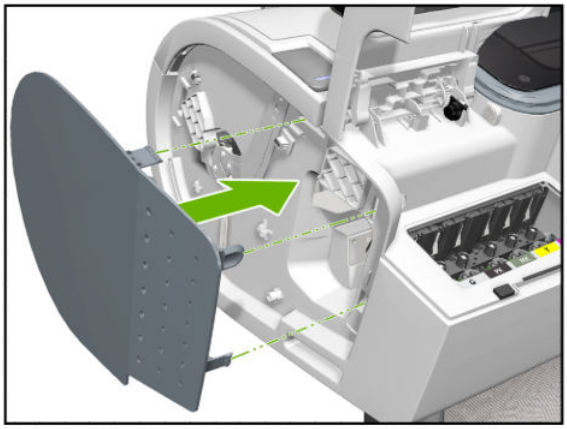

8.

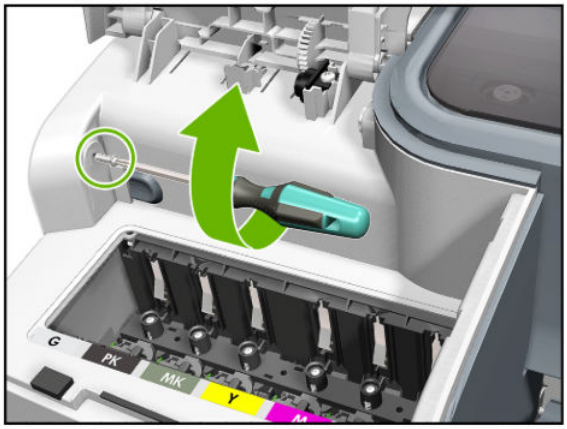

9.

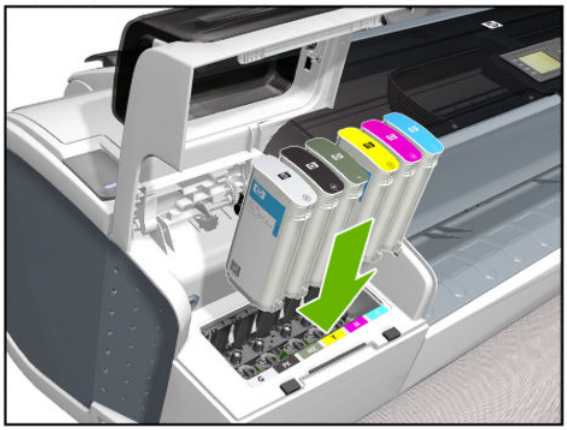

10.

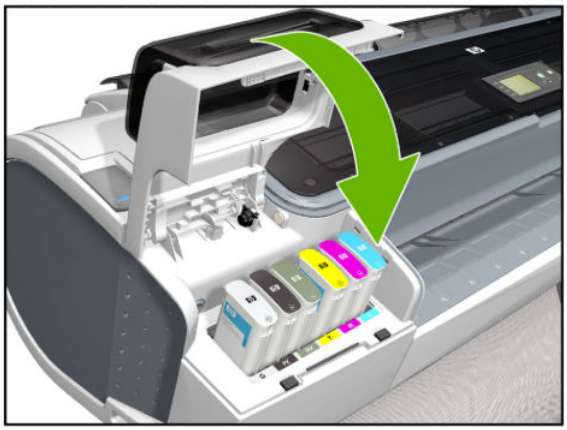

Pinch arm assembly

1.

2.

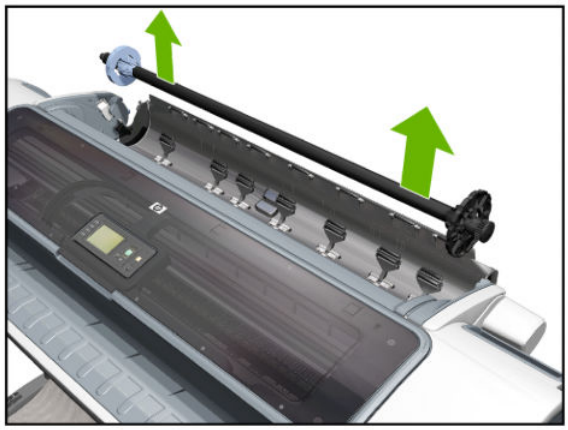

3.

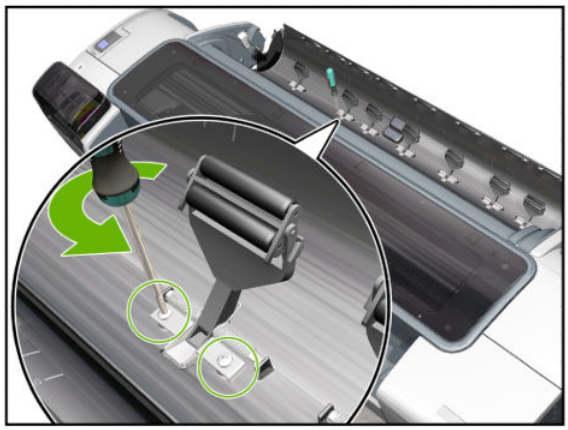

4.

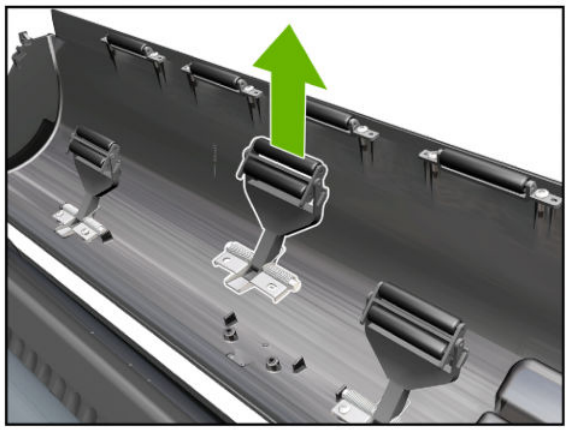

5.

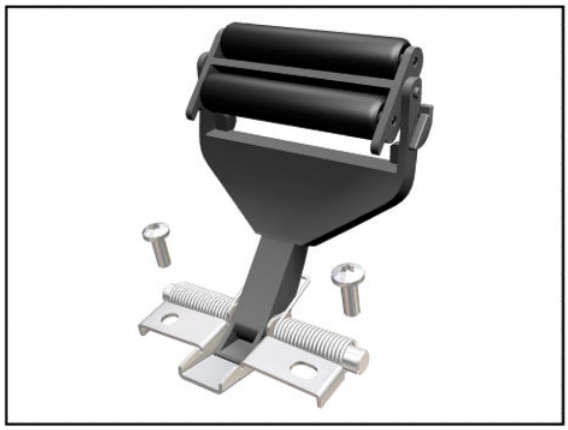

6.

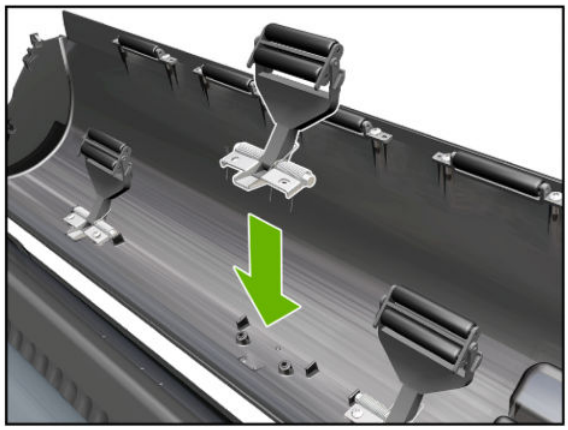

7.

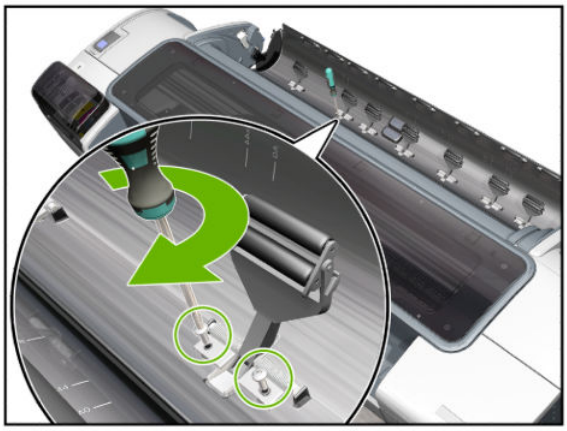

8.

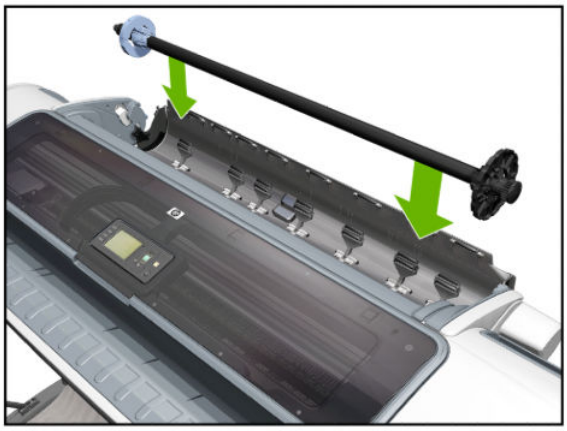

9.

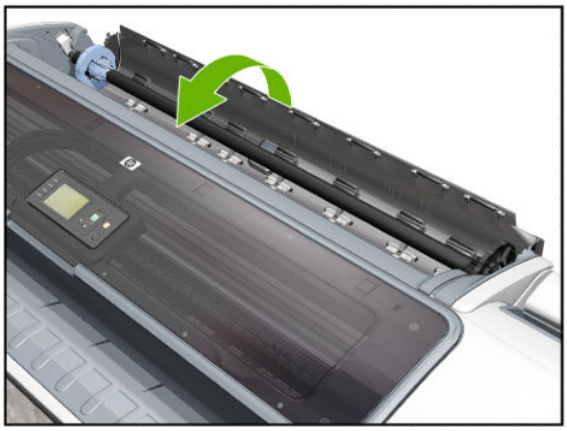

Pinch arm assembly (screwdriver)

1.

2.

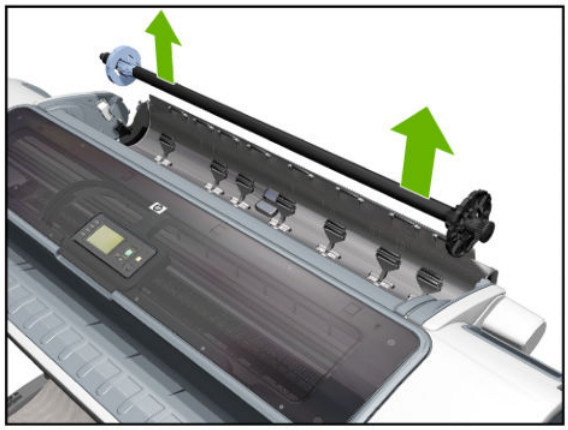

3.

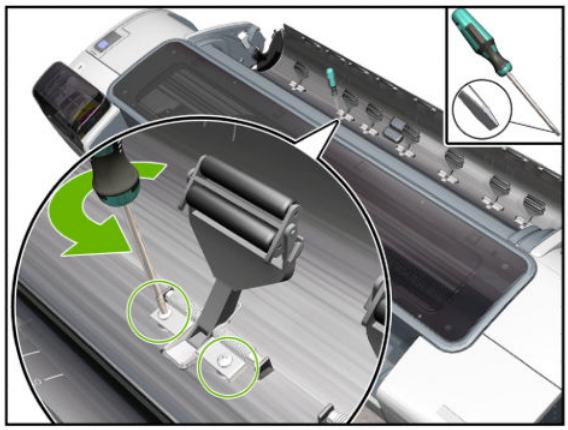

4.

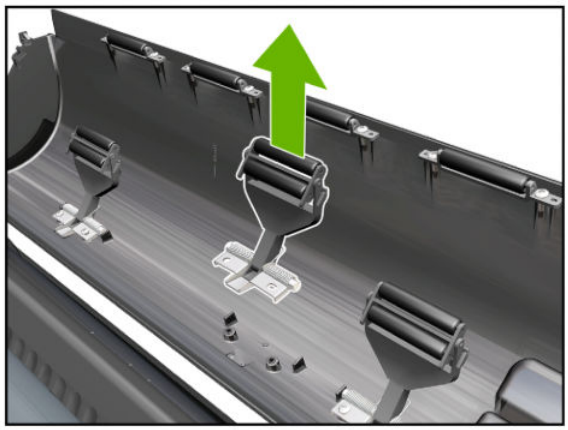

5.

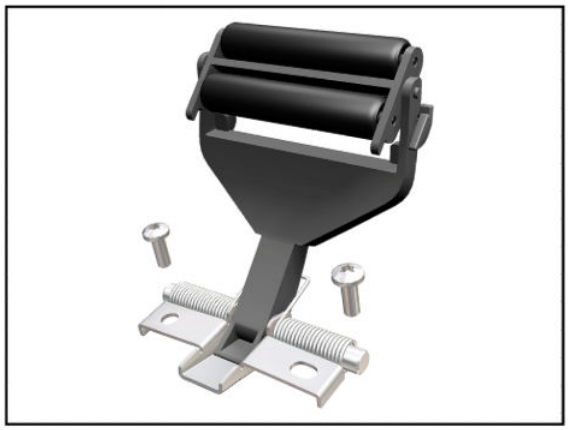

6.

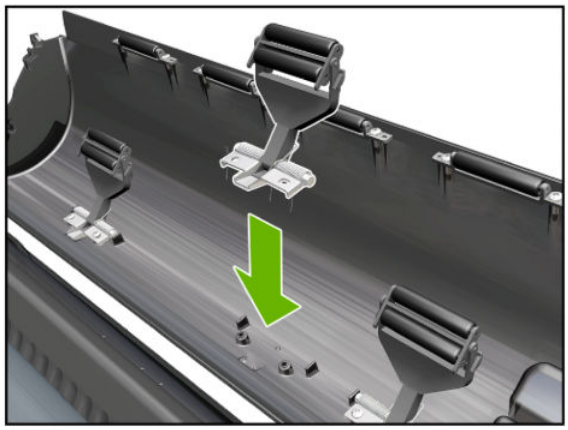

7.

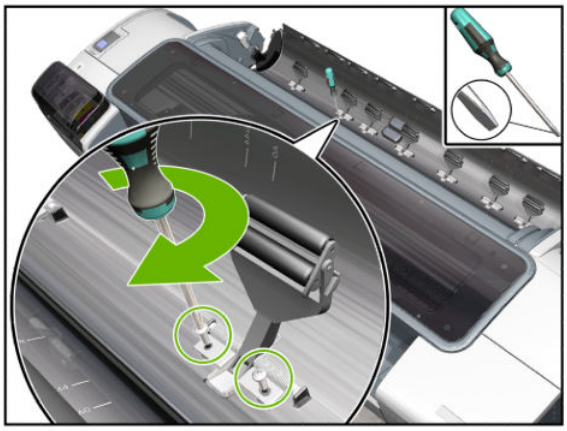

8.

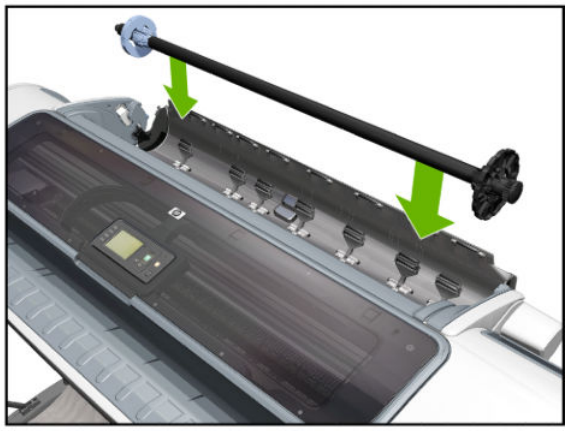

9.

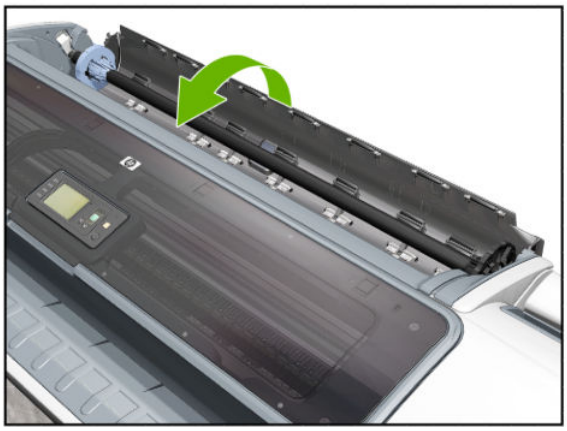

Roll cover upper bumpers

1.

2.

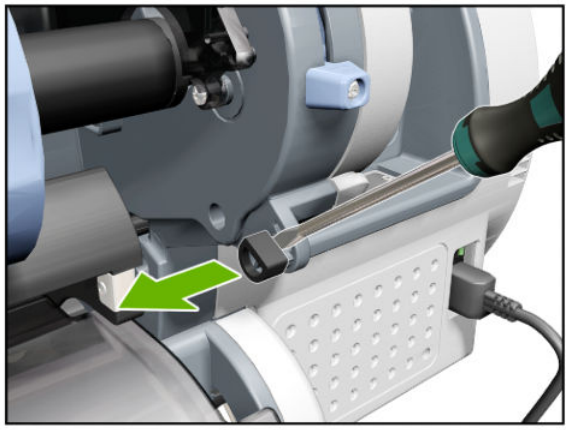

3.

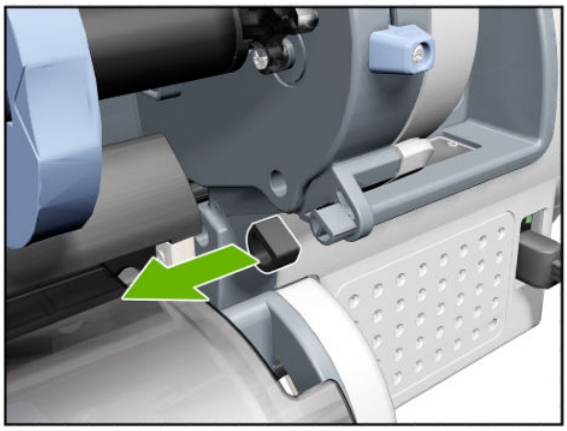

4.

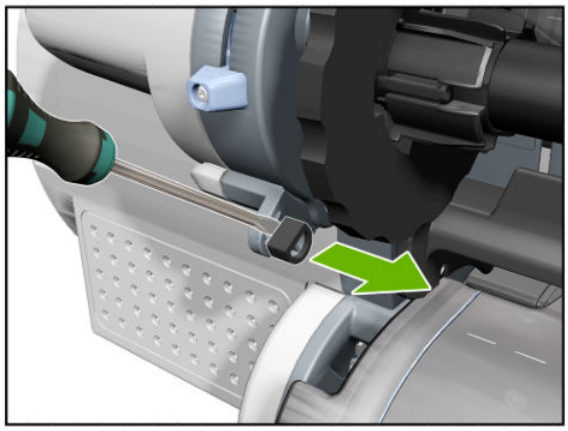

5.

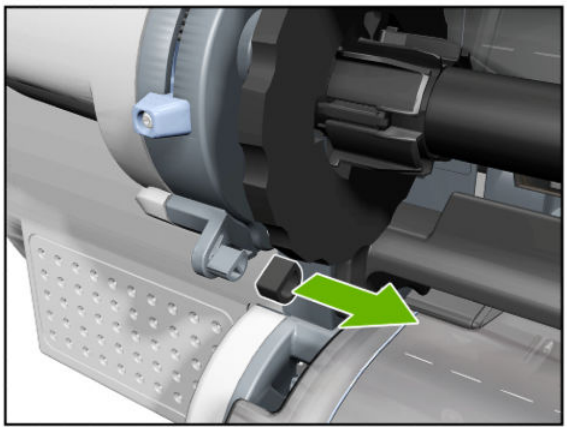

6.

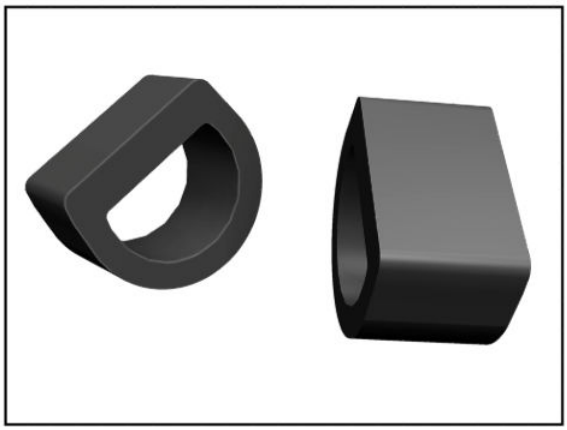

7.

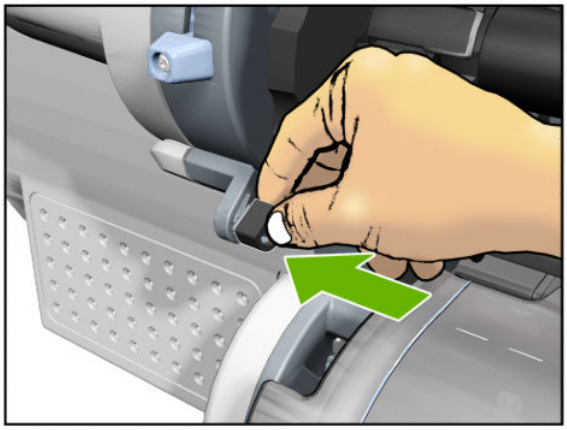

8.

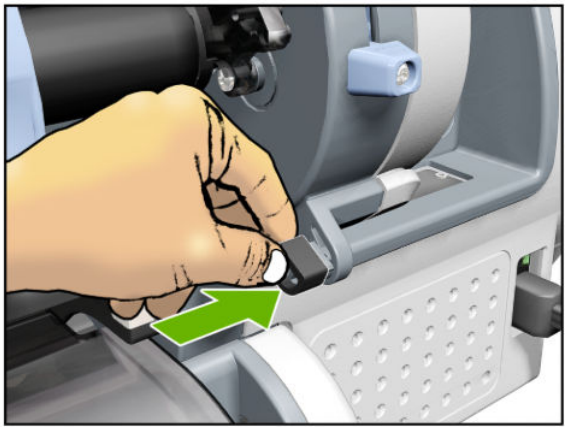

Roll cover upper bumpers (screwdriver)

1.

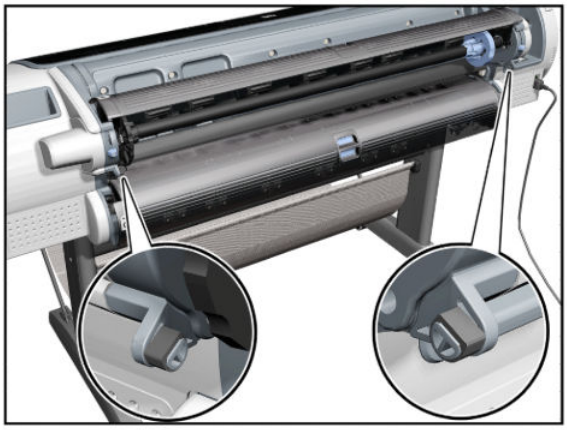

2.

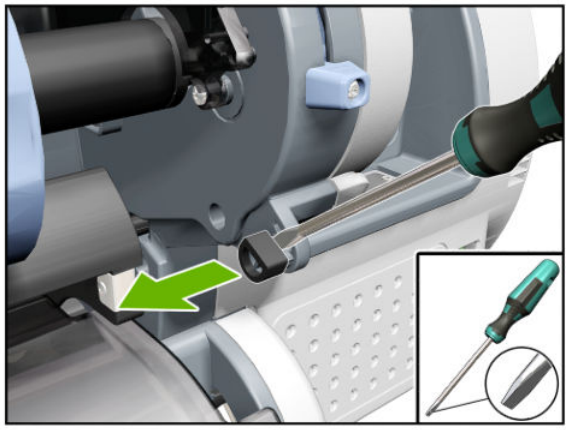

3.

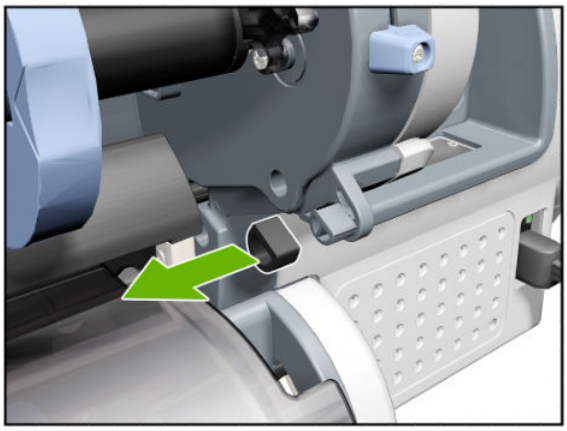

4.

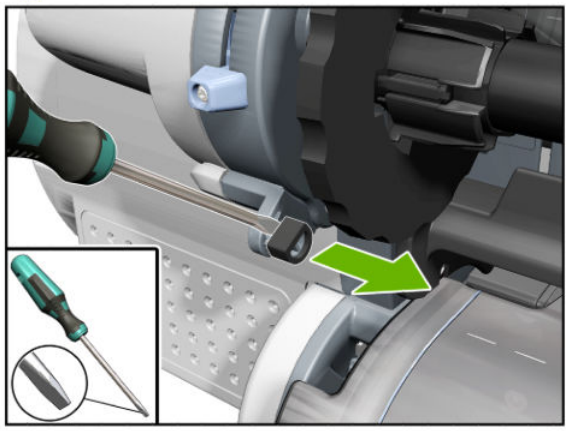

5.

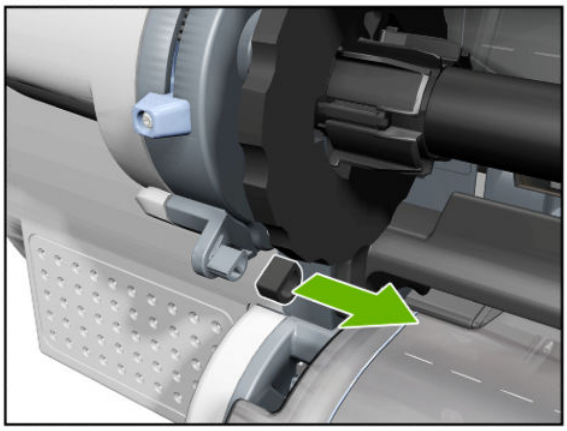

6.

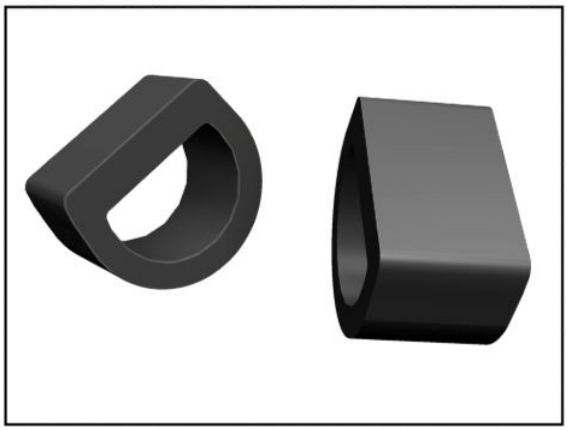

7.

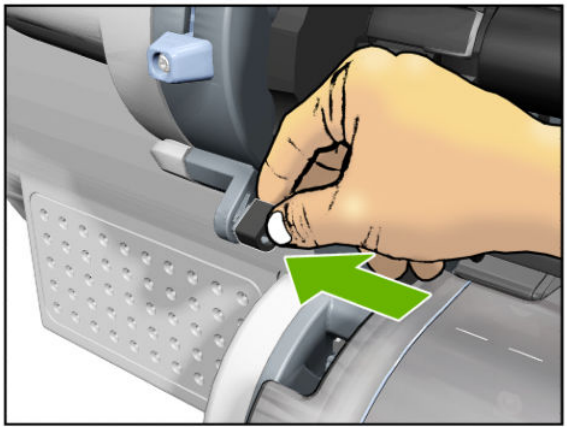

8.

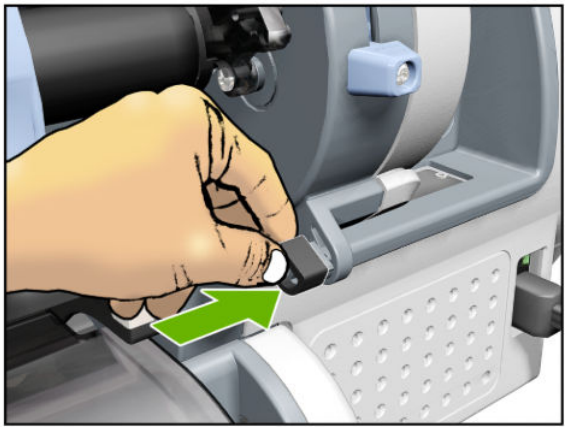

Foot Extension

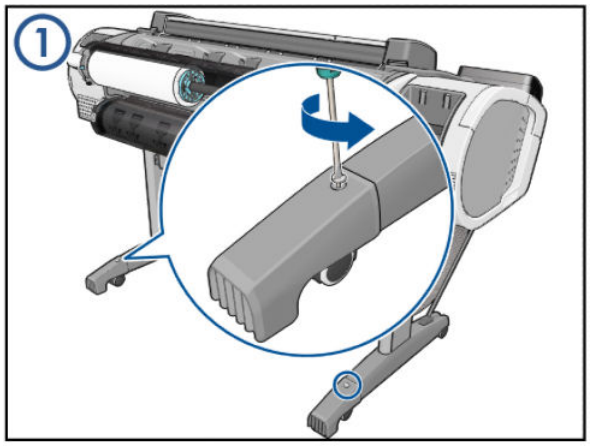

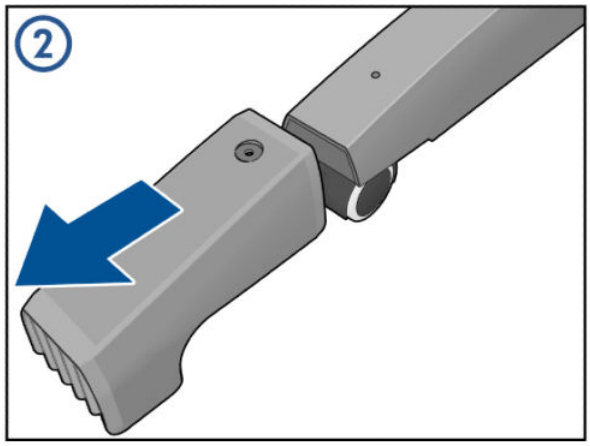

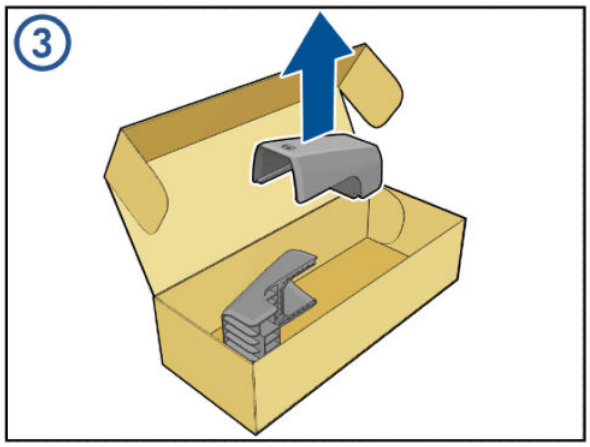

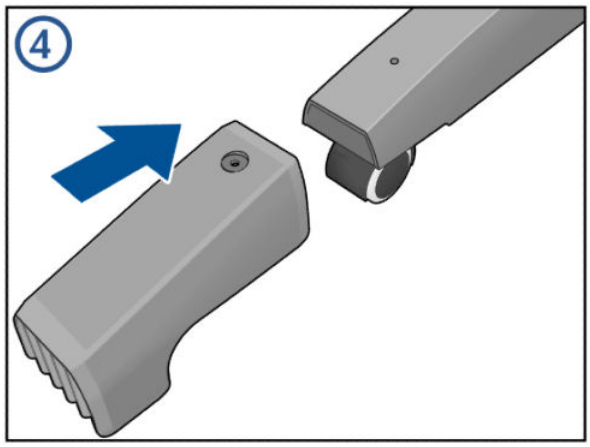

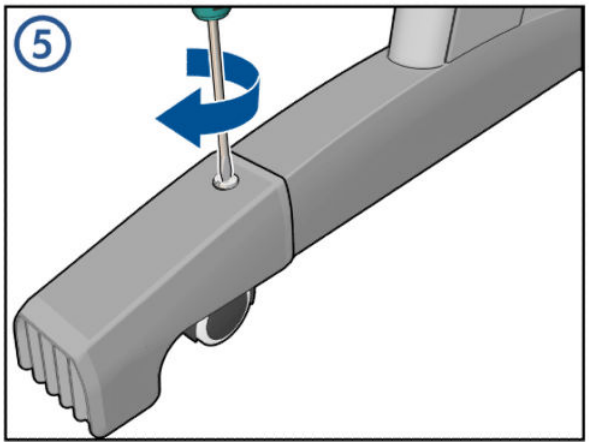

Front Deflector

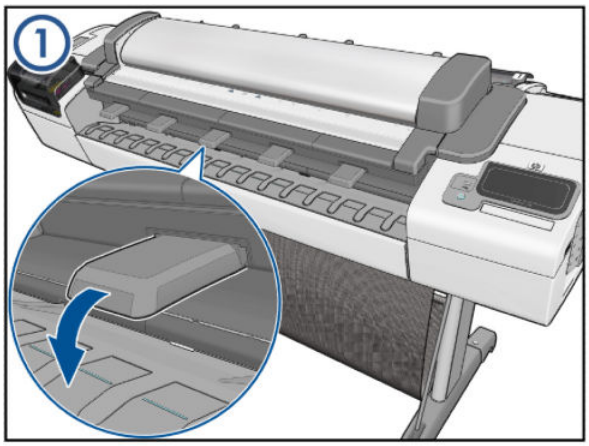

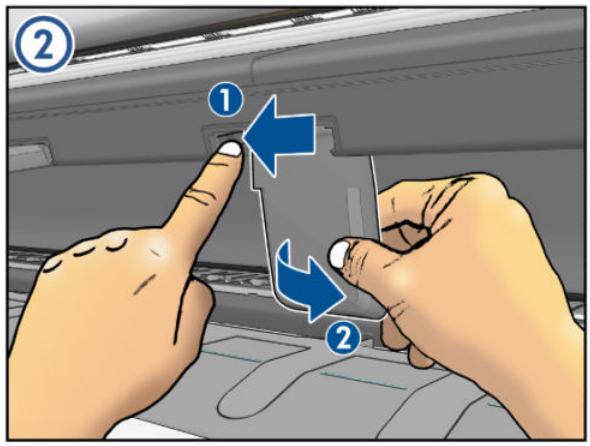

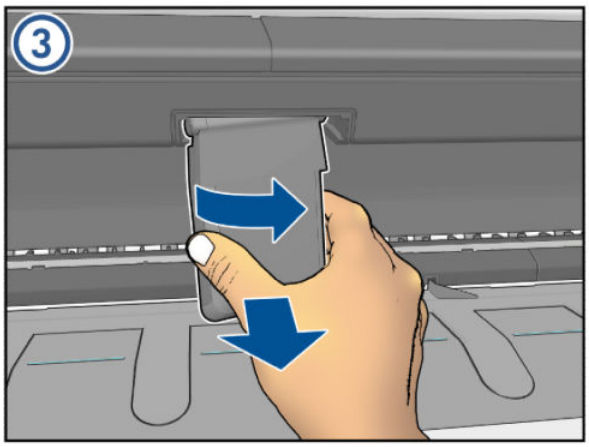

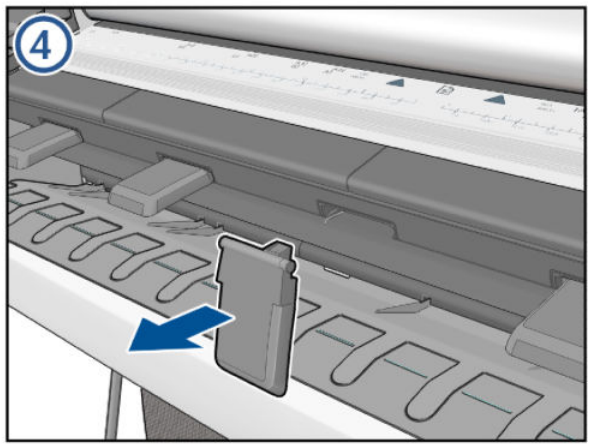

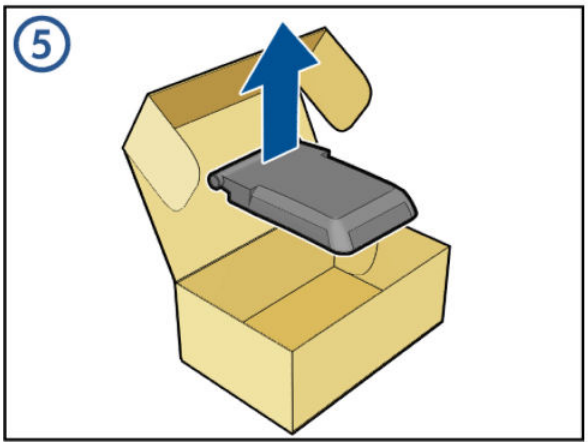

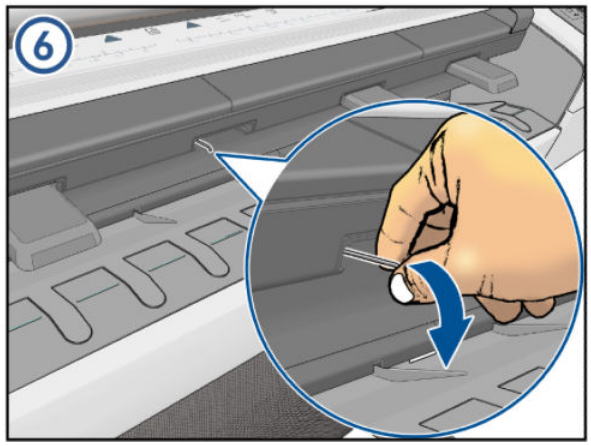

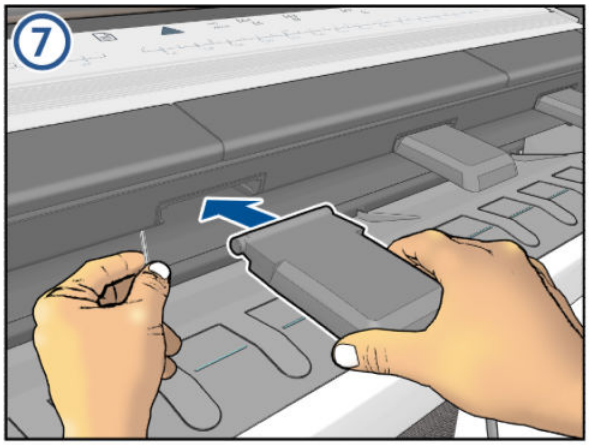
7

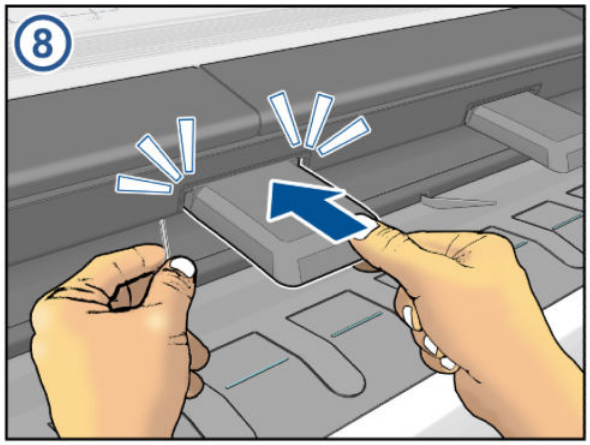
8

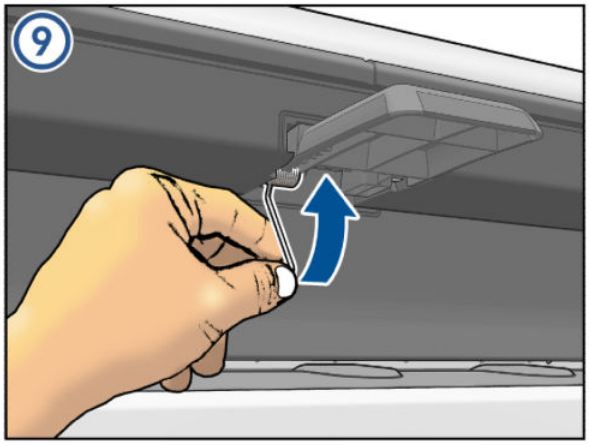
9

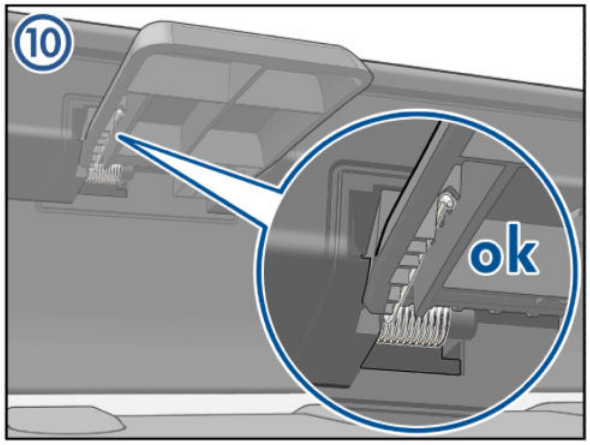
10
ok

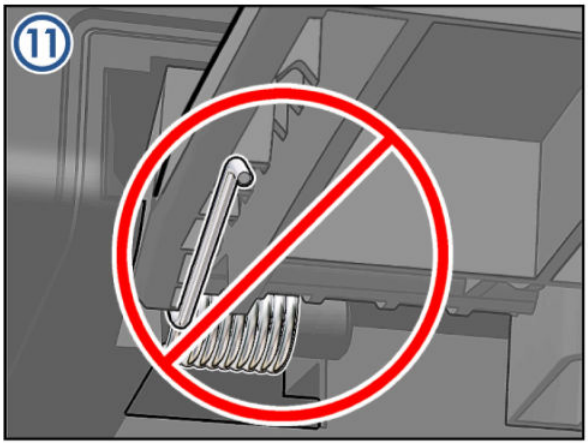
11

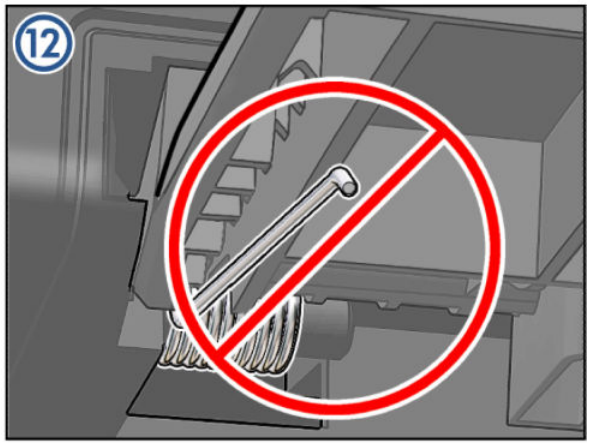
12

Rear Deflector Mylar

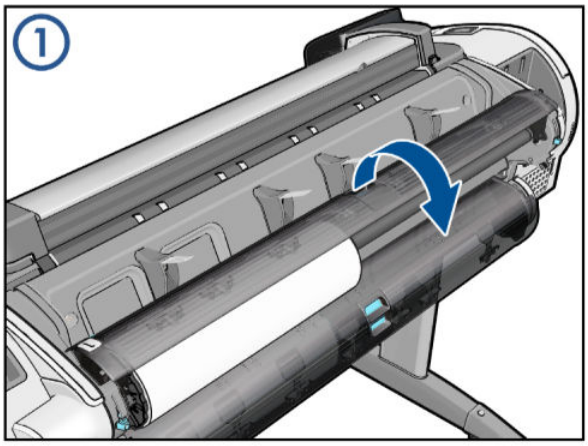

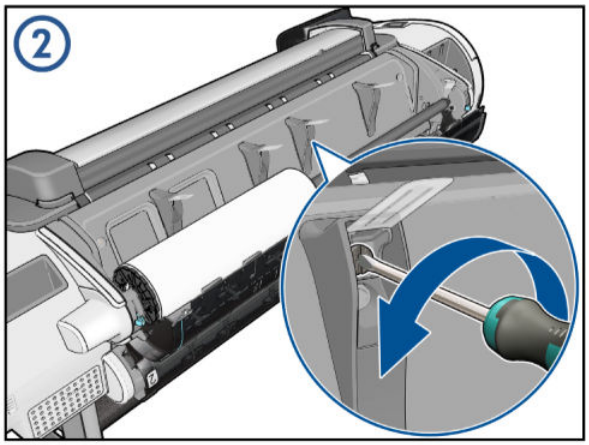

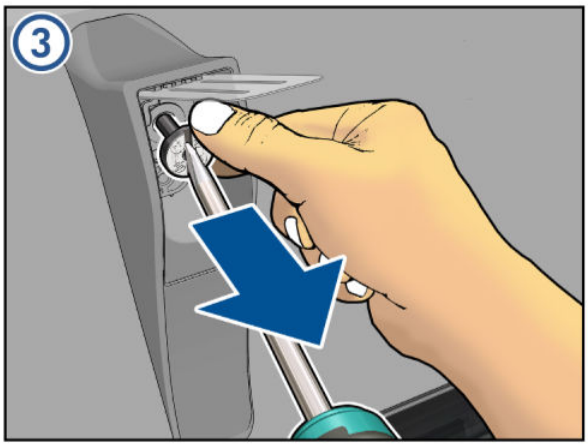

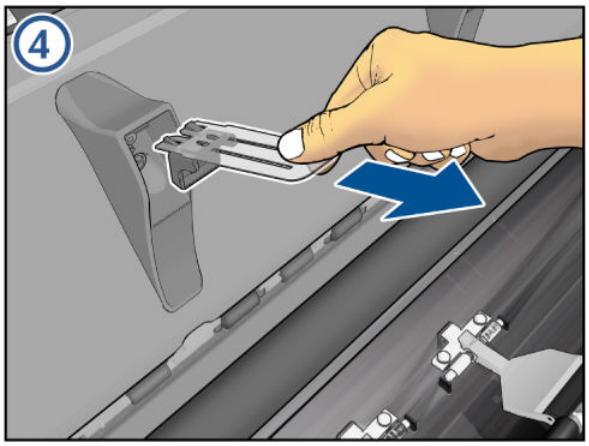

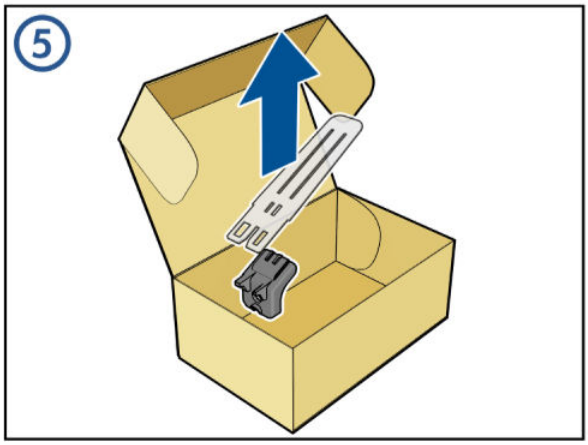

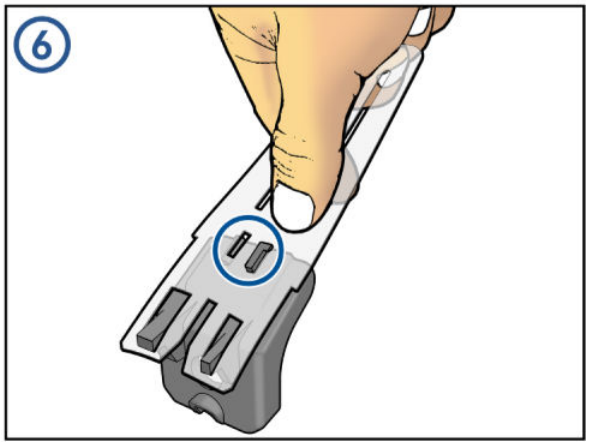

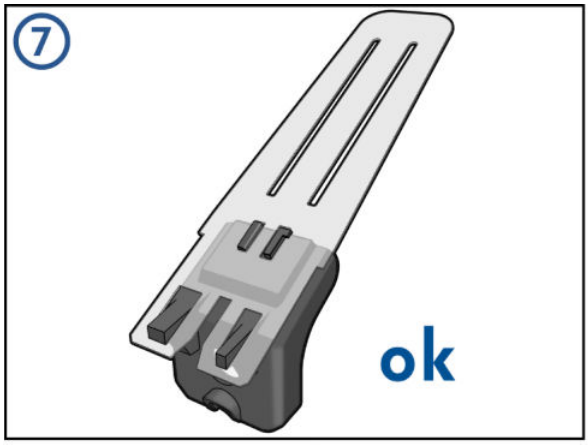
7
ok

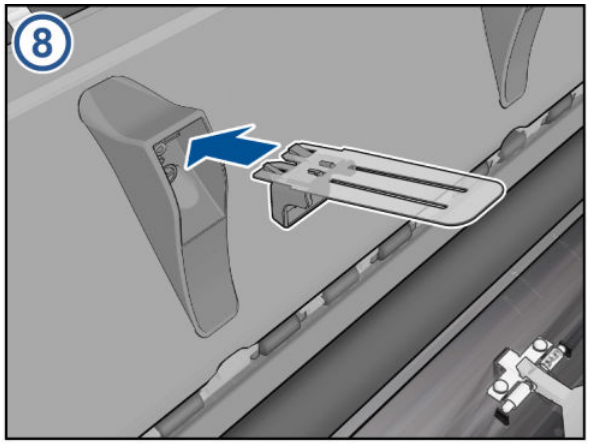
8

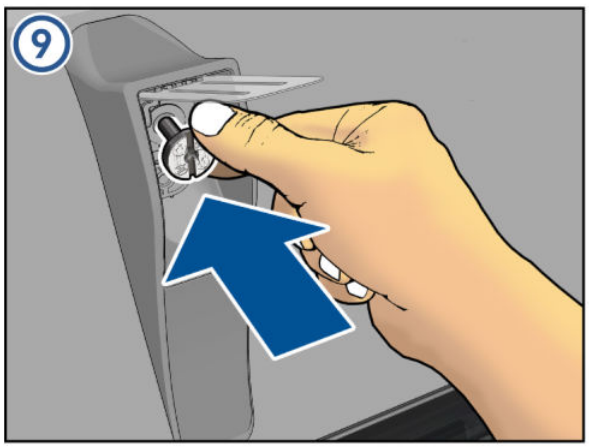
9

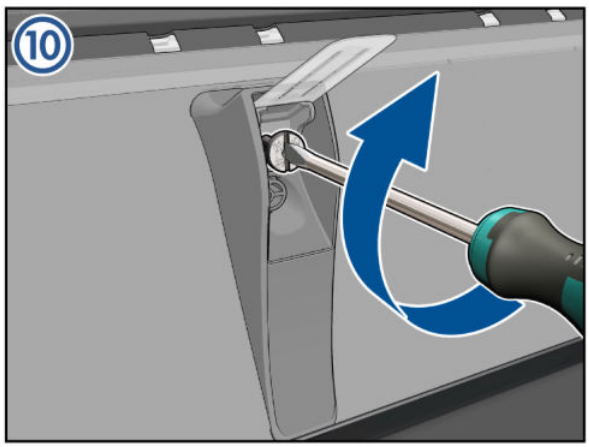
10

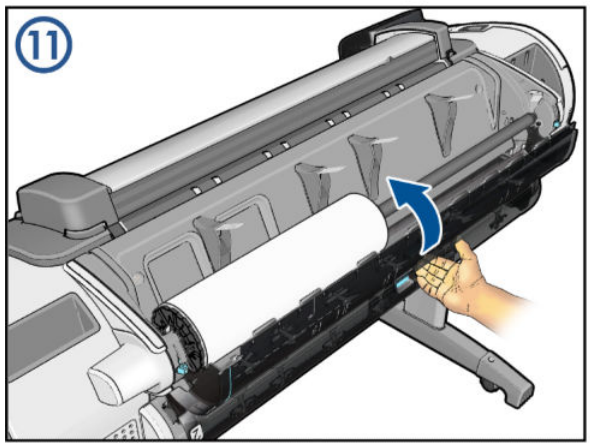
11

Glass Plate

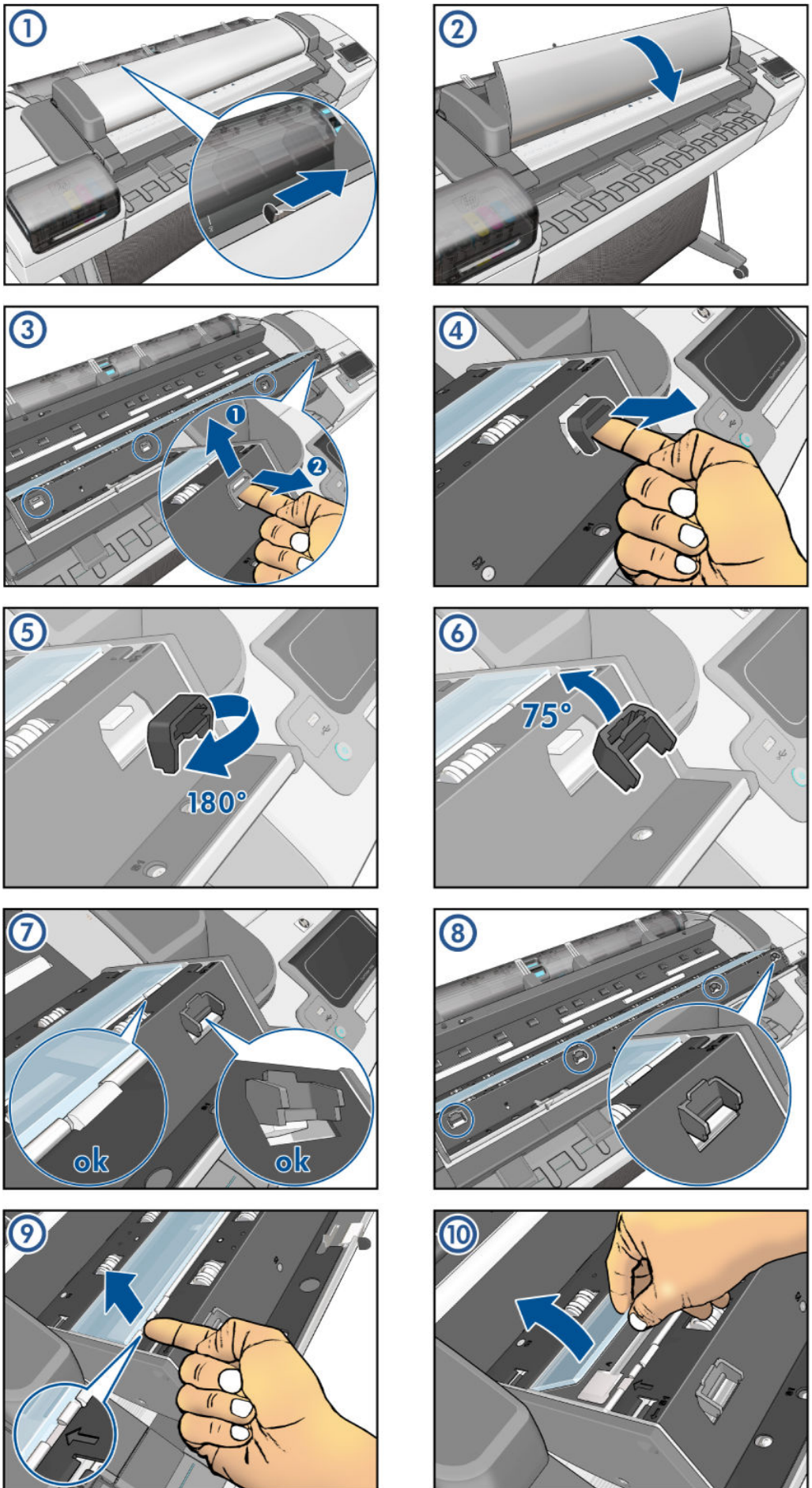

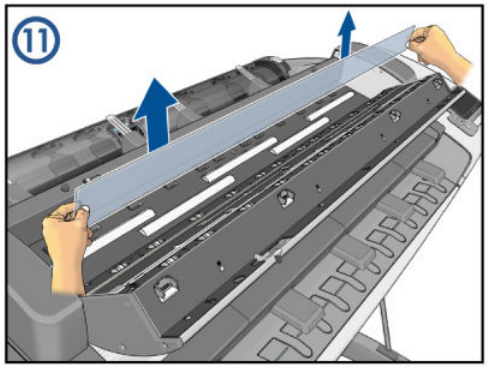
11

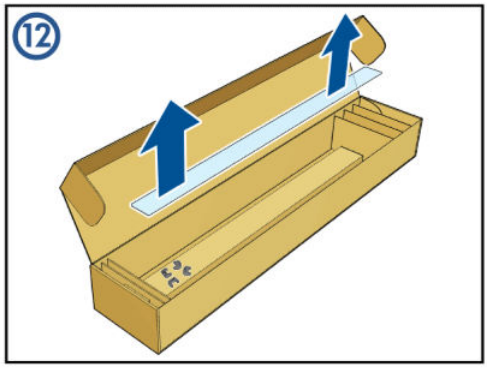
12

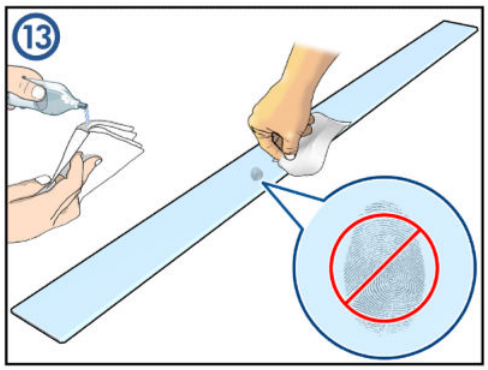
13

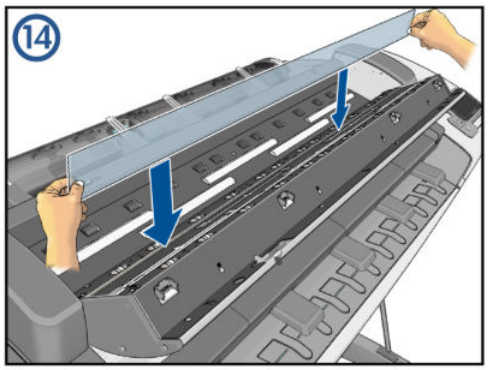
14

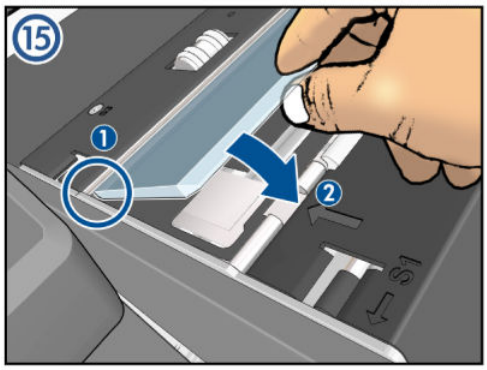
15
1
2
S1

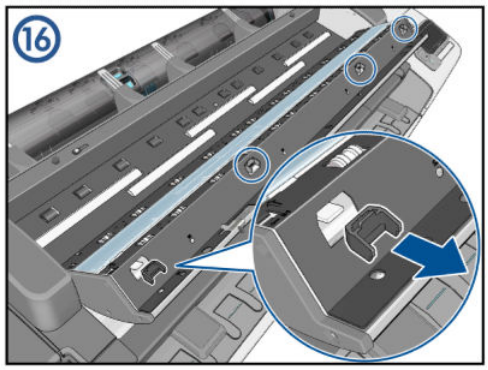
16

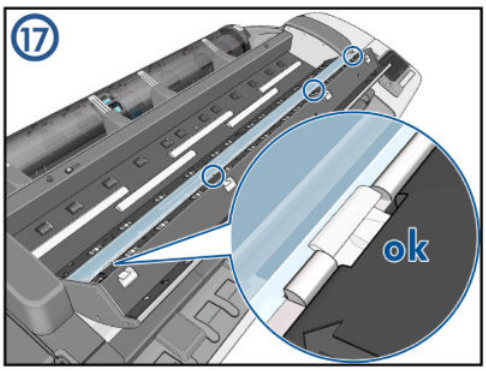
17
ok

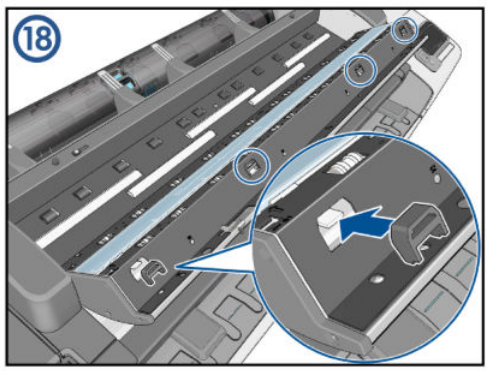
18

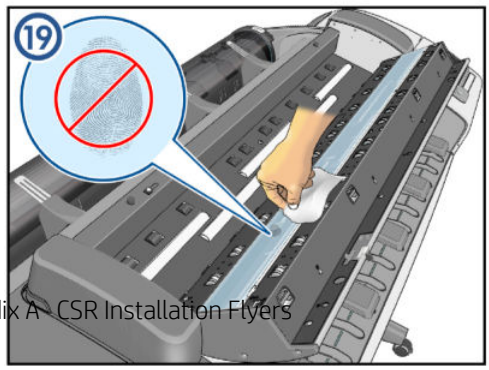
19

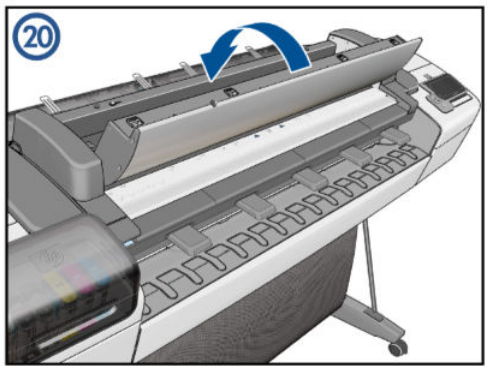
20

Latch Handle Cover

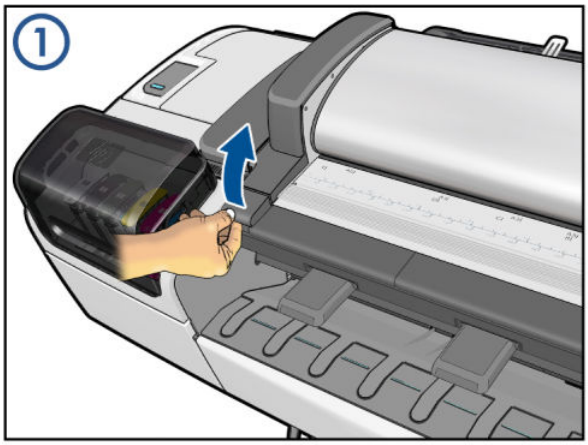

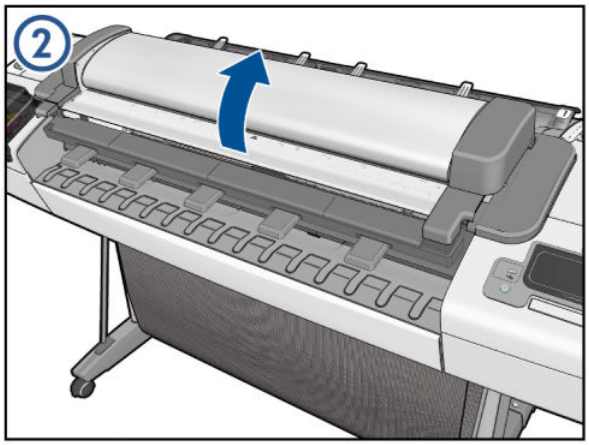

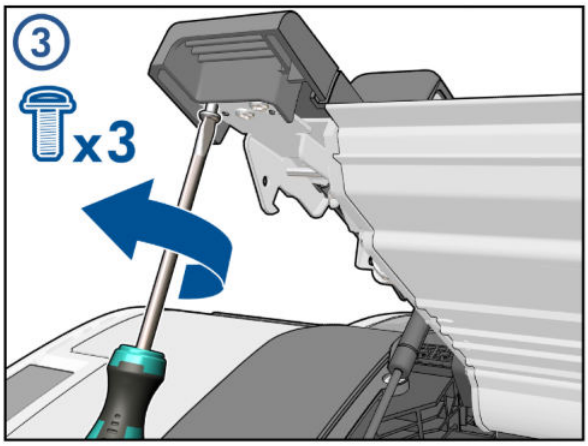

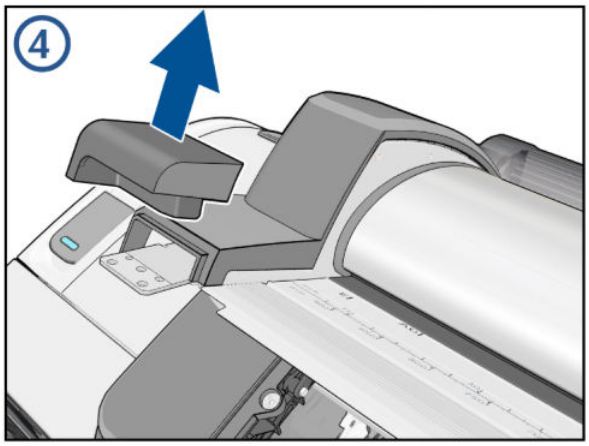

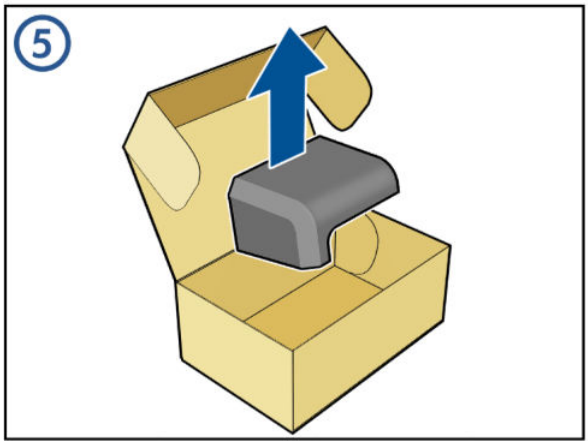

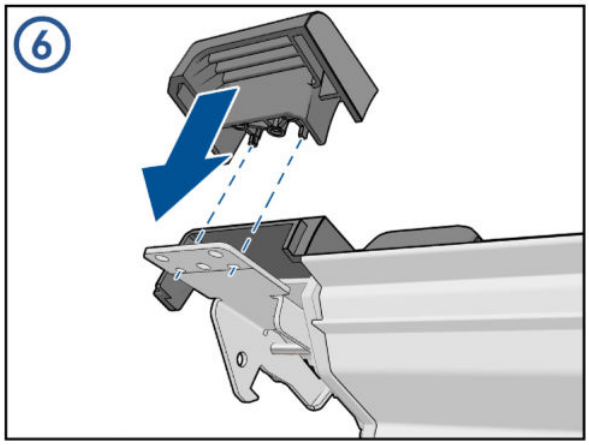

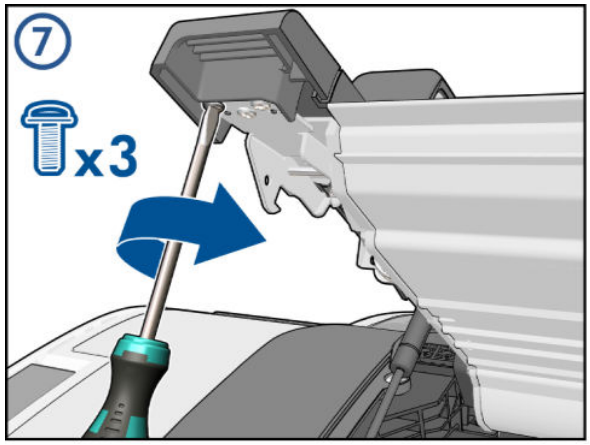
7
x3

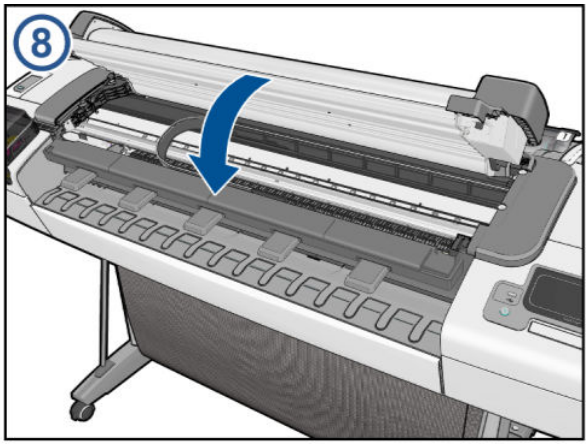
8